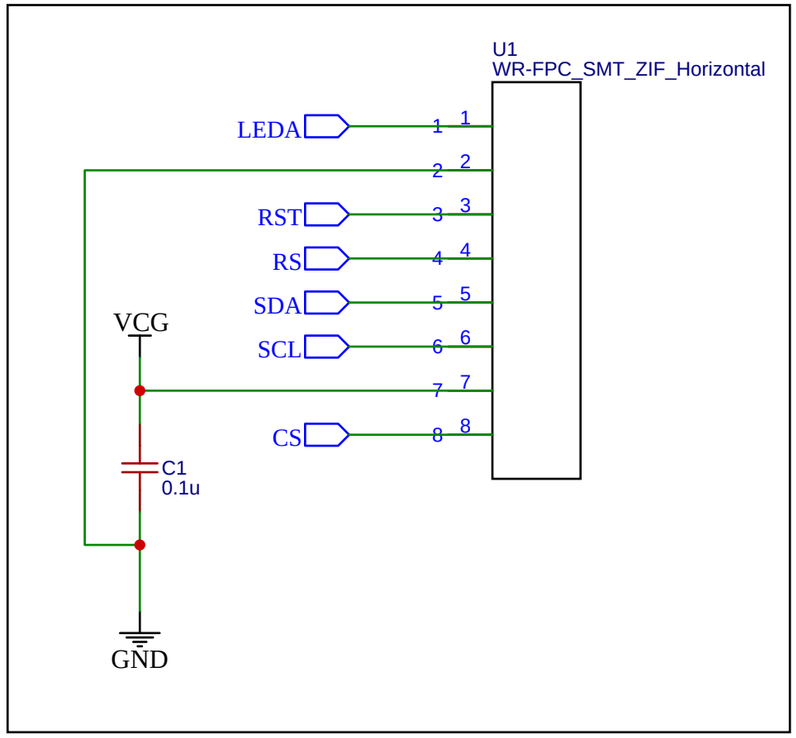

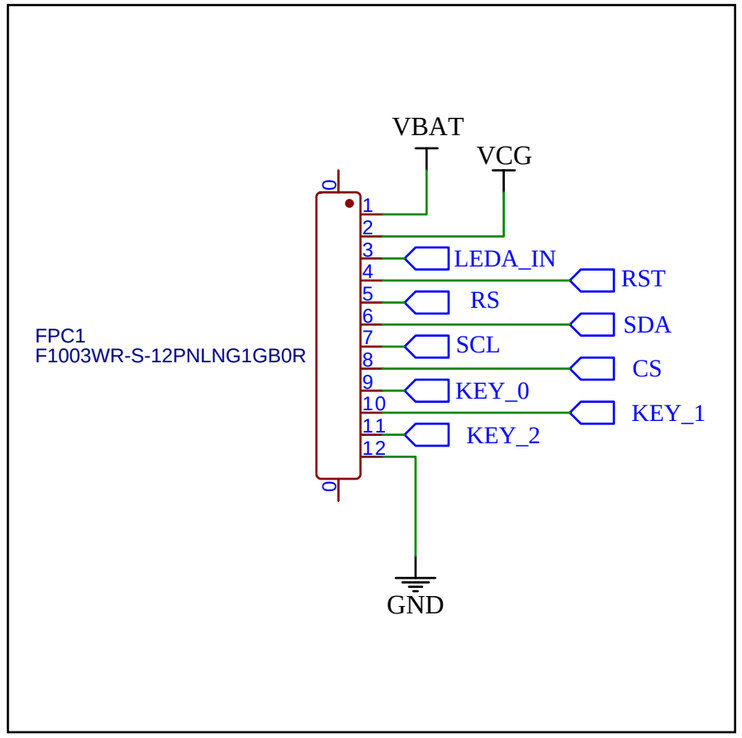

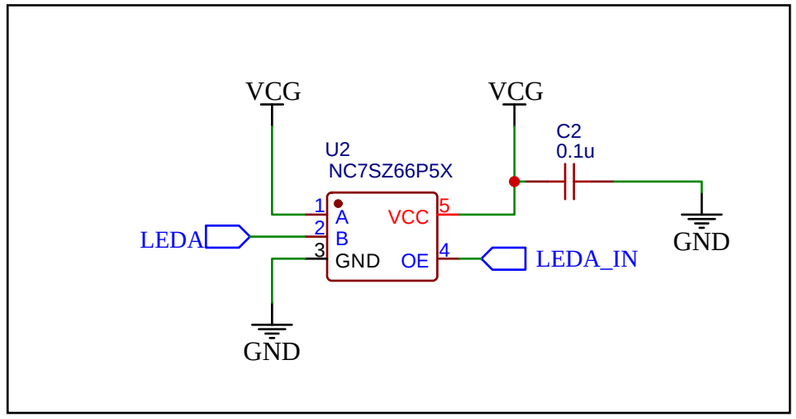

TITLE: Wurri Adapter Board		REV: 1.4
EasyEDA	Company: ADC Research and Development	Sheet: 1/1
	Date: 2021-02-15 Drawn By: Biniam Shimels	