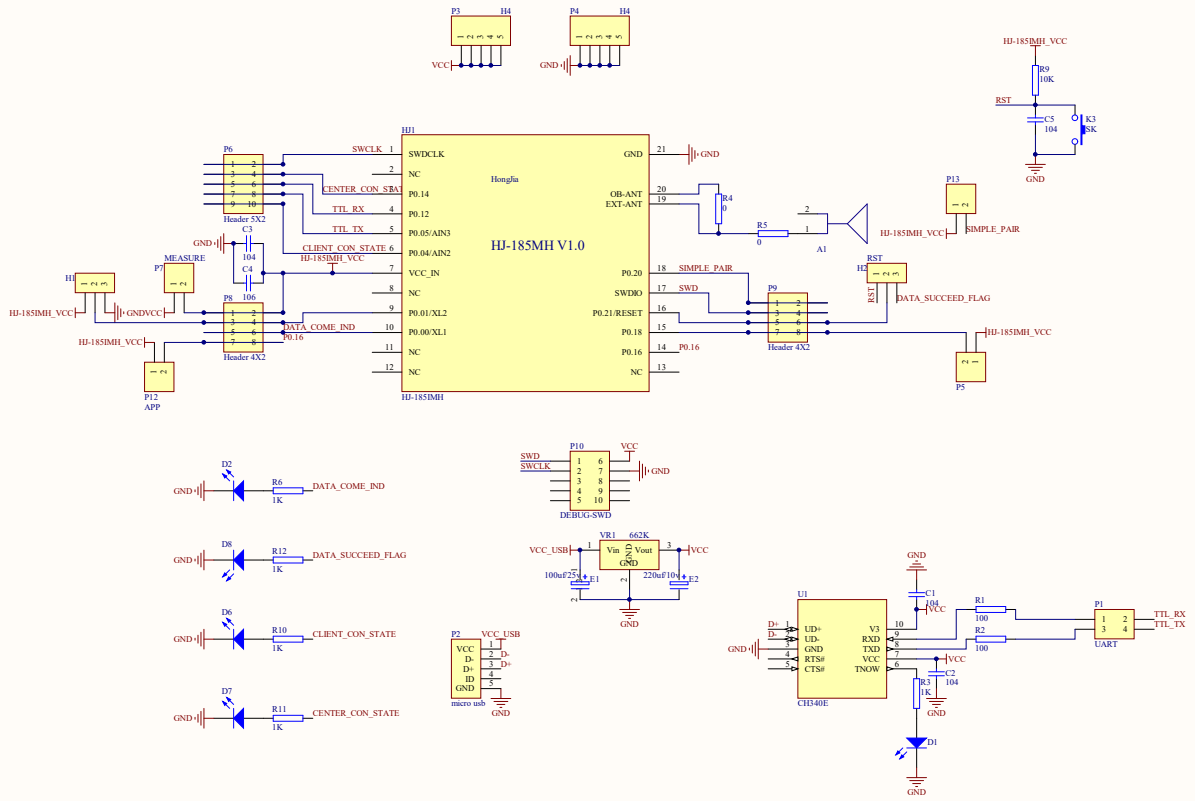

Title *			
Size: A2	Number: *	Revision: *	
Date: 2020-02-26	Time: 12:18:07	Sheet * of *	
File: G:/2019_2_18	\HJ-185IMH Demo	2019_10_13	\HJ-185.SchDoc

Altium