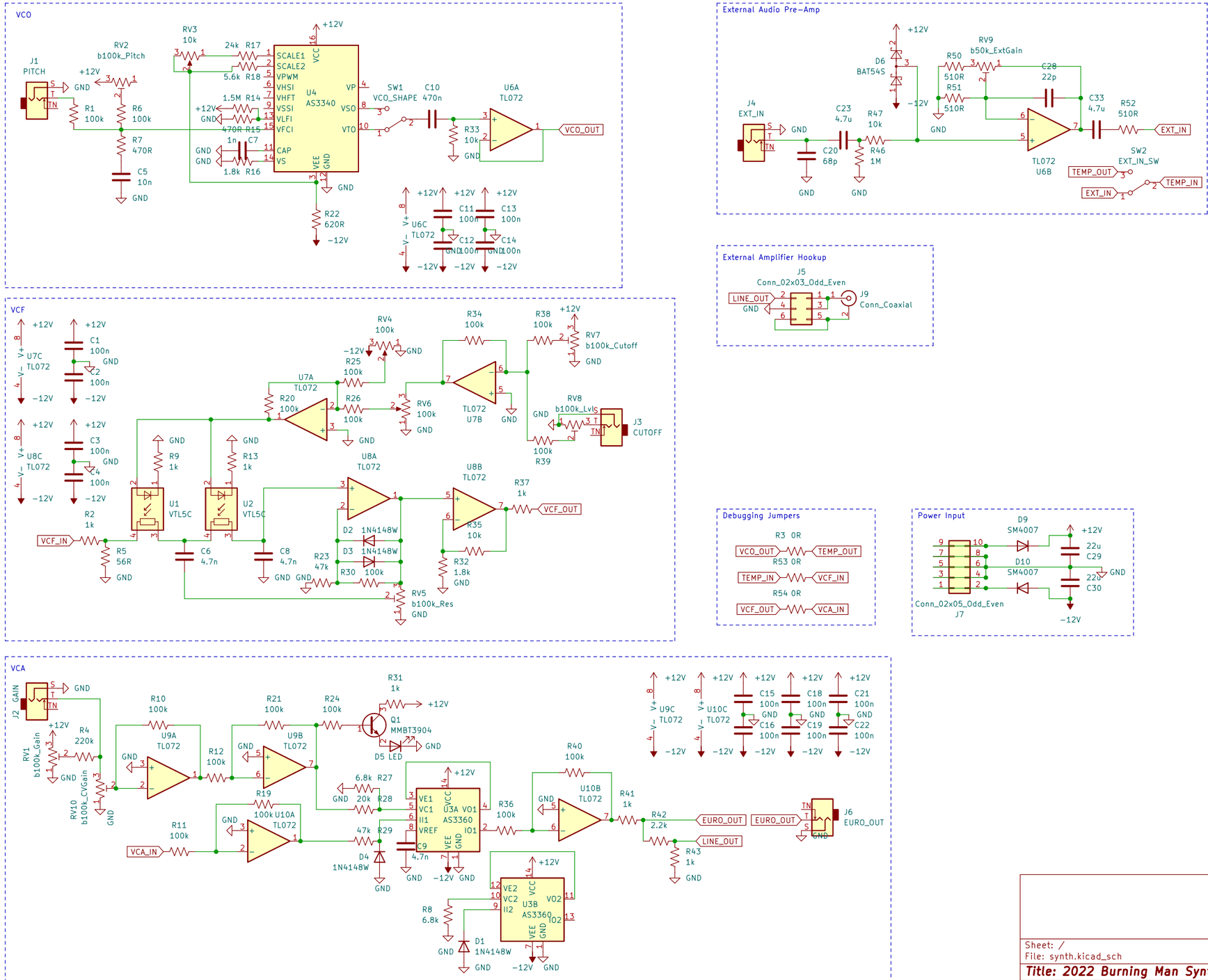

Sheet: /
File: synth.kicad_sch

Title: 2022 Burning Man Synth

Size: B	Date:	Rev:
KiCad E.D.A. kicad (6.0.0)		Id: 1/1