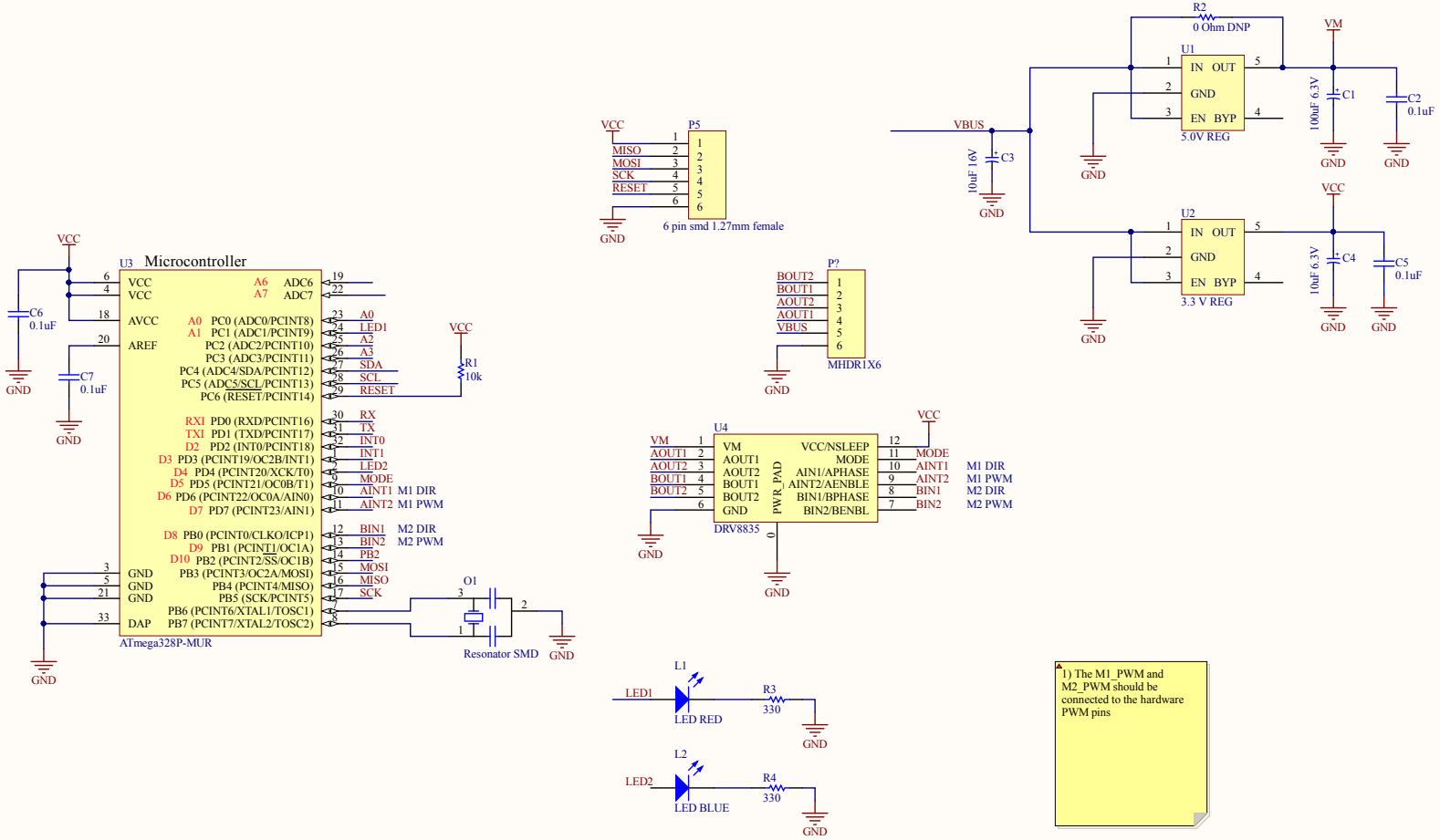

1) The M1_PWM and M2_PWM should be connected to the hardware PWM pins

Title	Motor Controller Board
Designed by	Artem Dementyev
Ver	1.0
Date:	11/5/2015
Time:	6:52:53 PM

mit media lab