LEGO Minifigure Assembly

Alex Diffor

TEC 216

Assembly	Part
Whole	LEGO Minifigure
Head	Head
Upper Body	Chest
Upper Body	Left Arm
Upper Body	Right Arm
Upper Body	Left Hand
Upper Body	Right Hand
Lower Body	Waist
Lower Body	Left Leg
Lower Body	Right Leg

Extra Part: Lightsaber

I designed a lightsaber to go with the LEGO minifigure. Every single child who yearns for a LEGO minifigure also wants accessories included with it. This lightsaber is meant to do exactly that. It may not be cost-effective, but it sure will make customers happy and come back for plenty of other goods. Not just the handle was designed and rendered, but also the blade. Take a look below.

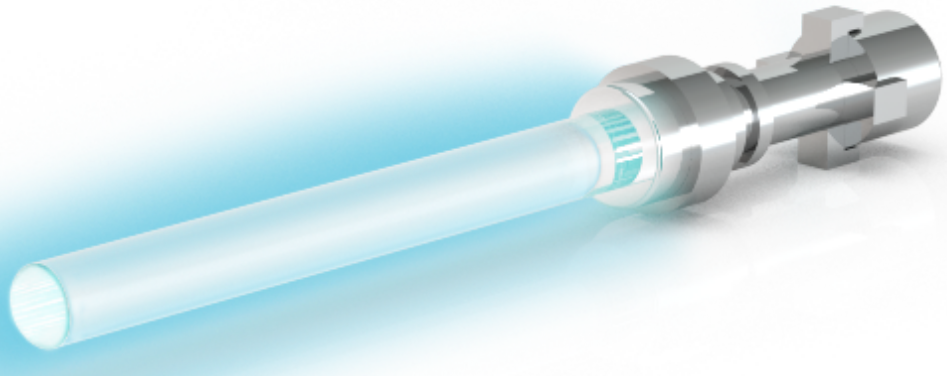

Drawings and Assemblies

The next pages contain the orthographic and exploded views of all the modeled parts and their associated assemblies. They are listed alphabetically, parts drawings first, followed by the assemblies.

All measurements +- 0.01

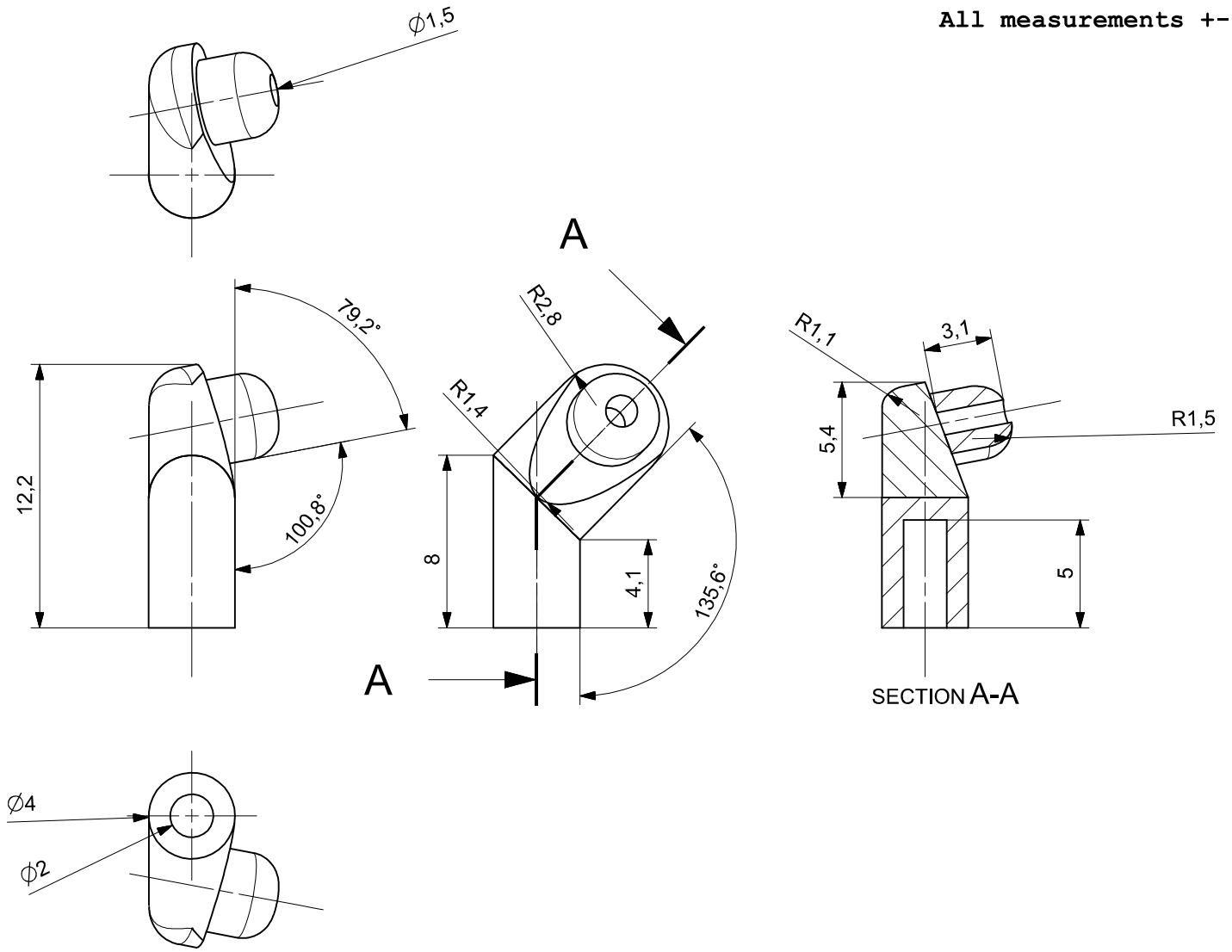

DEPARTMENT OF TECHNOLOGY ILLINOIS STATE UNIVERSITY NORMAL, ILLINOIS 61790	TITLE: ARM		SCALE: 5:1
	DRAWN BY: DIFFOR, ALEX	DATE: 12-07-20	

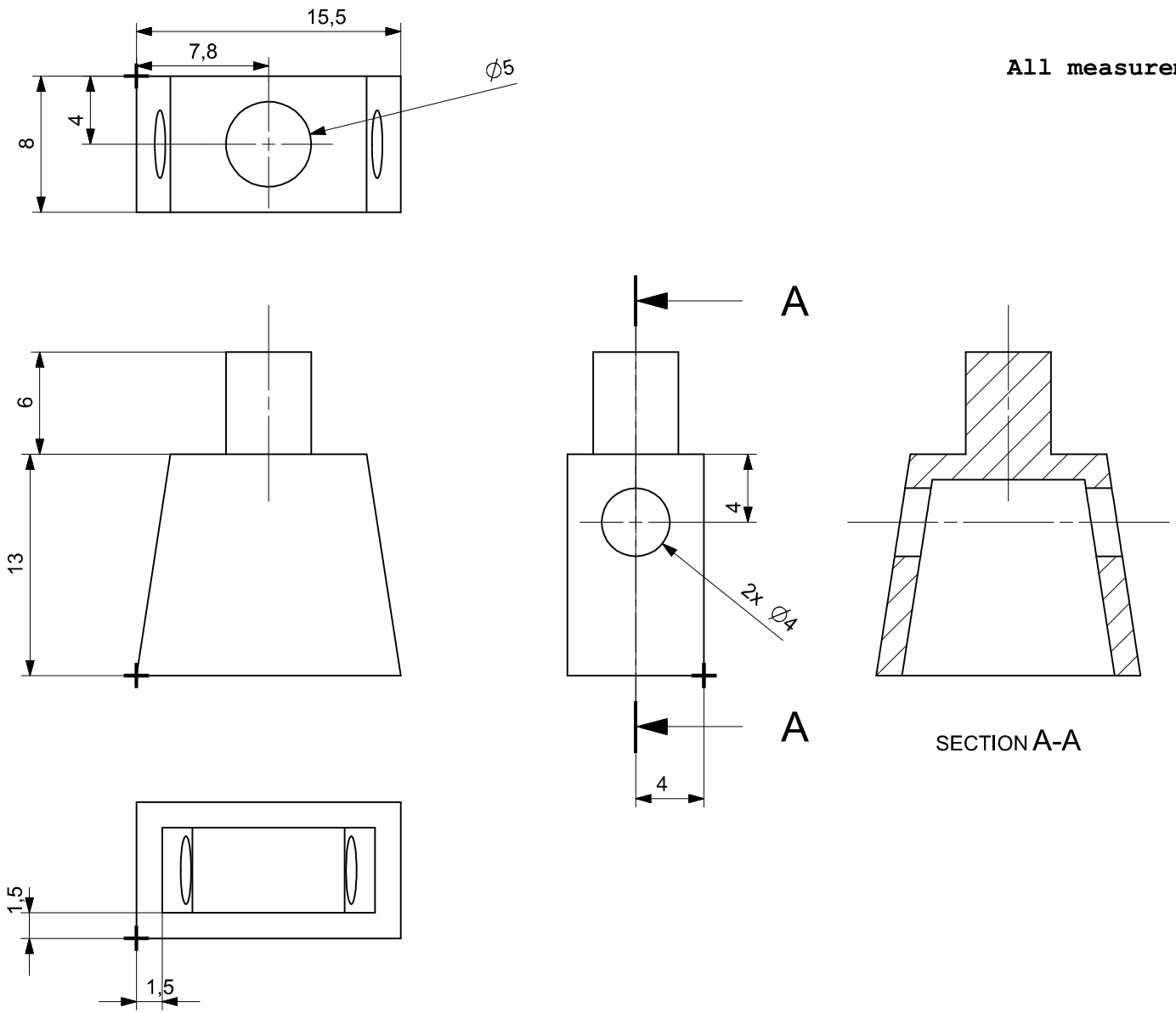

All measurements +- 0.01

DEPARTMENT OF TECHNOLOGY ILLINOIS STATE UNIVERSITY NORMAL, ILLINOIS 61790	TITLE: CHEST		SCALE: 4:1
	DRAWN BY: DIFFOR, ALEX	DATE: 12-07-20	

All measurements +- 0.01

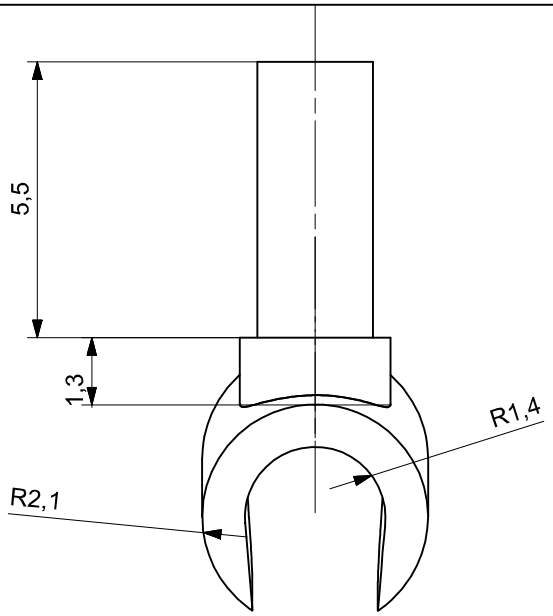

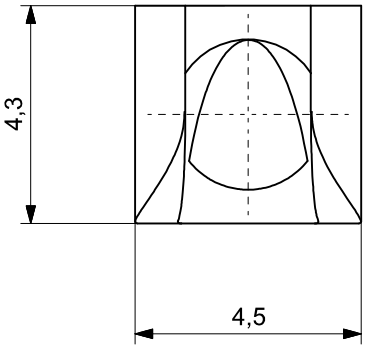

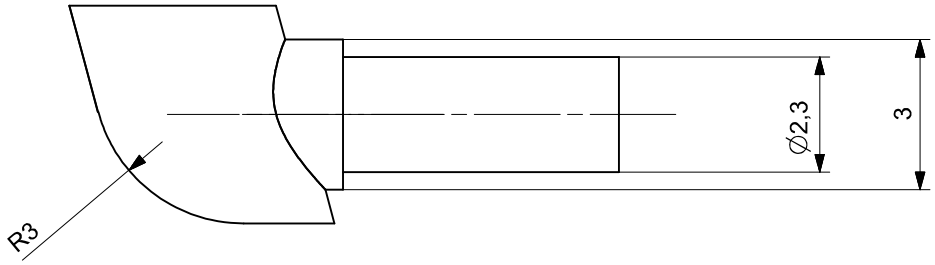

DEPARTMENT OF TECHNOLOGY ILLINOIS STATE UNIVERSITY NORMAL, ILLINOIS 61790	TITLE: HAND		SCALE: 10:1
	DRAWN BY: DIFFOR, ALEX	DATE: 12-07-20	

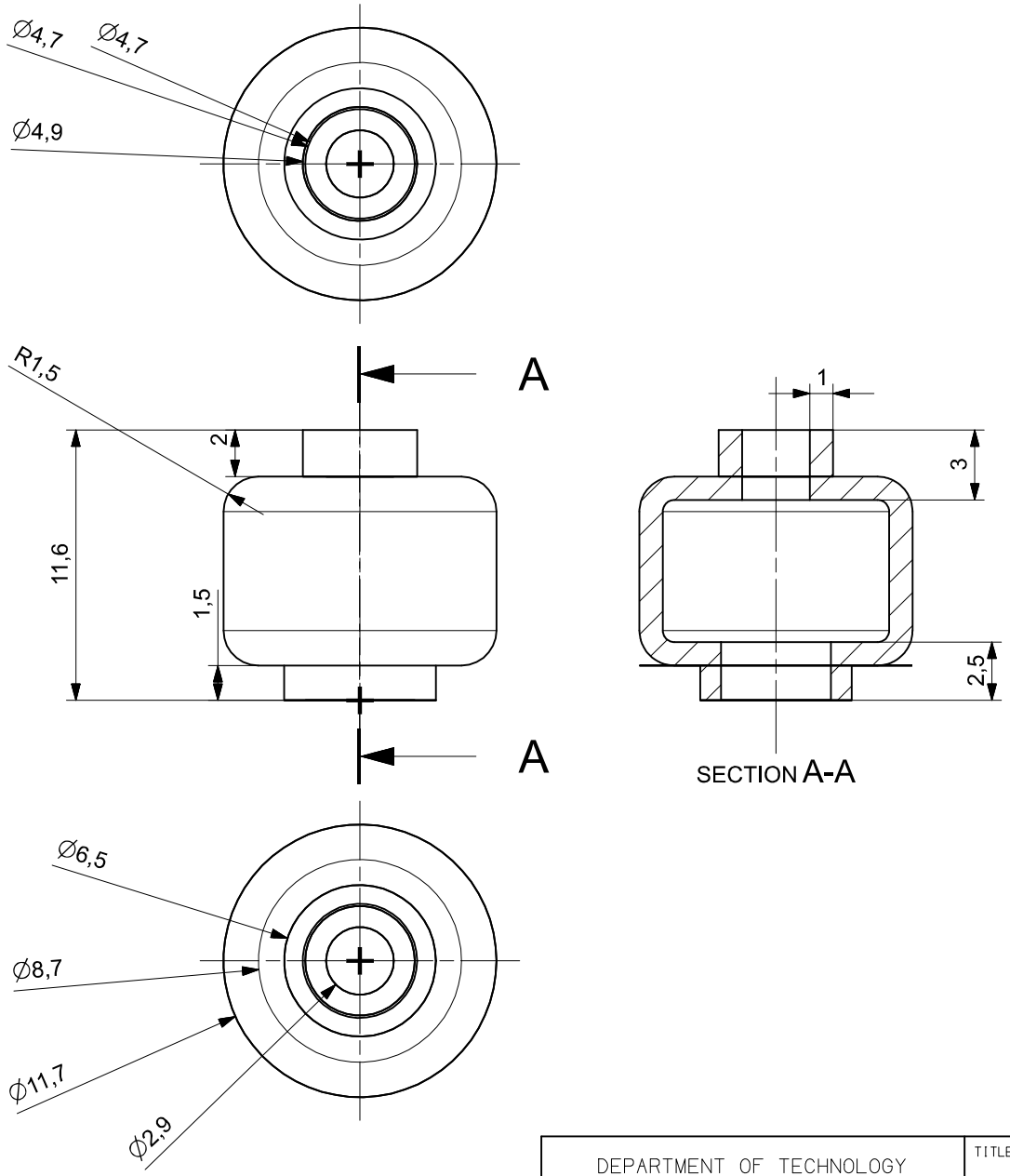

All measurements +- 0.01

DEPARTMENT OF TECHNOLOGY ILLINOIS STATE UNIVERSITY NORMAL, ILLINOIS 61790	TITLE: HEAD		SCALE: 5:1
	DRAWN BY: DIFFOR, ALEX	DATE: 12-06-20	

All measurements +- 0.01

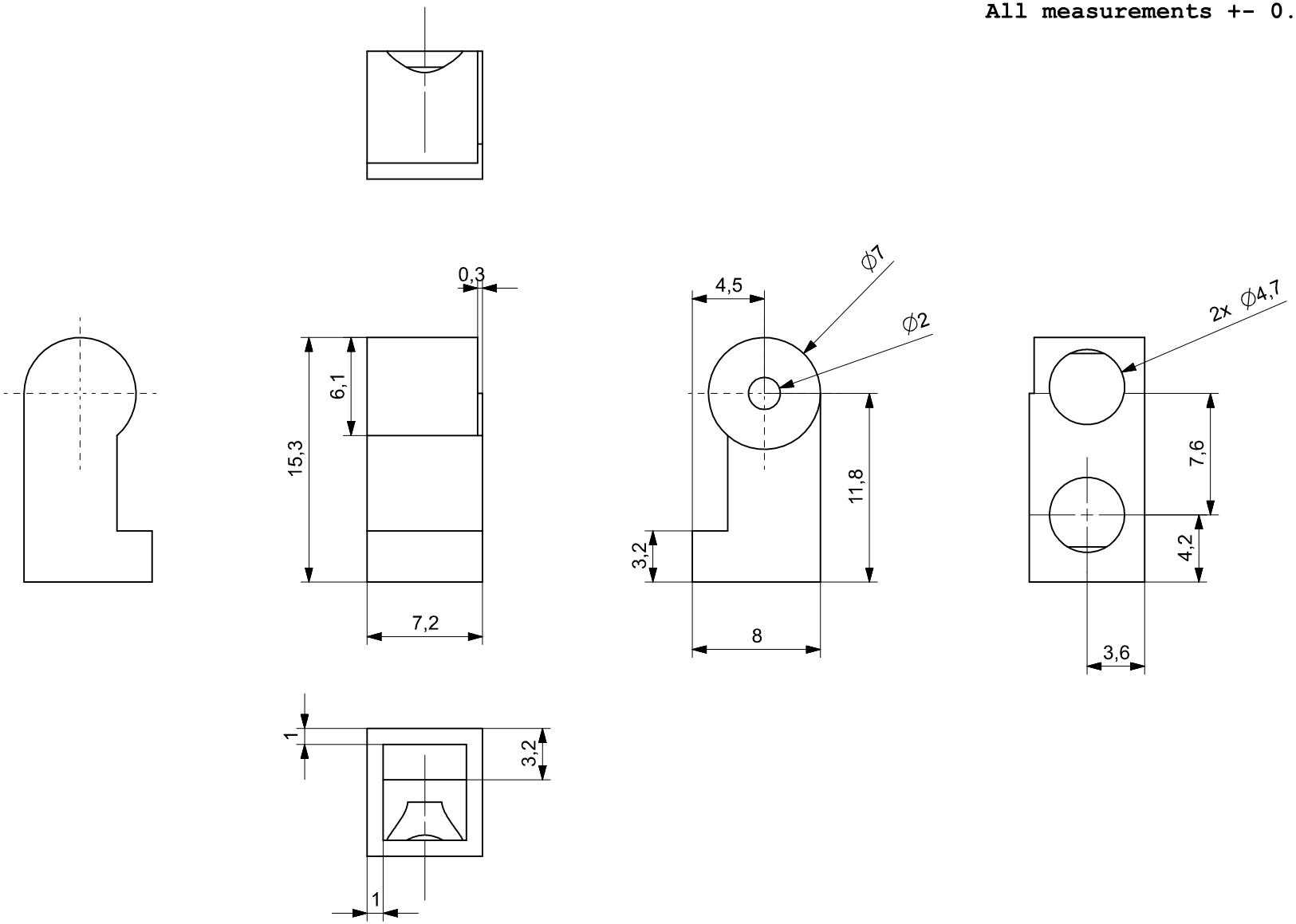

DEPARTMENT OF TECHNOLOGY ILLINOIS STATE UNIVERSITY NORMAL, ILLINOIS 61790	TITLE: LEFT LEG		SCALE: 4:1
	DRAWN BY: DIFFOR, ALEX	DATE: 12-07-20	

All measurements +- 0.01

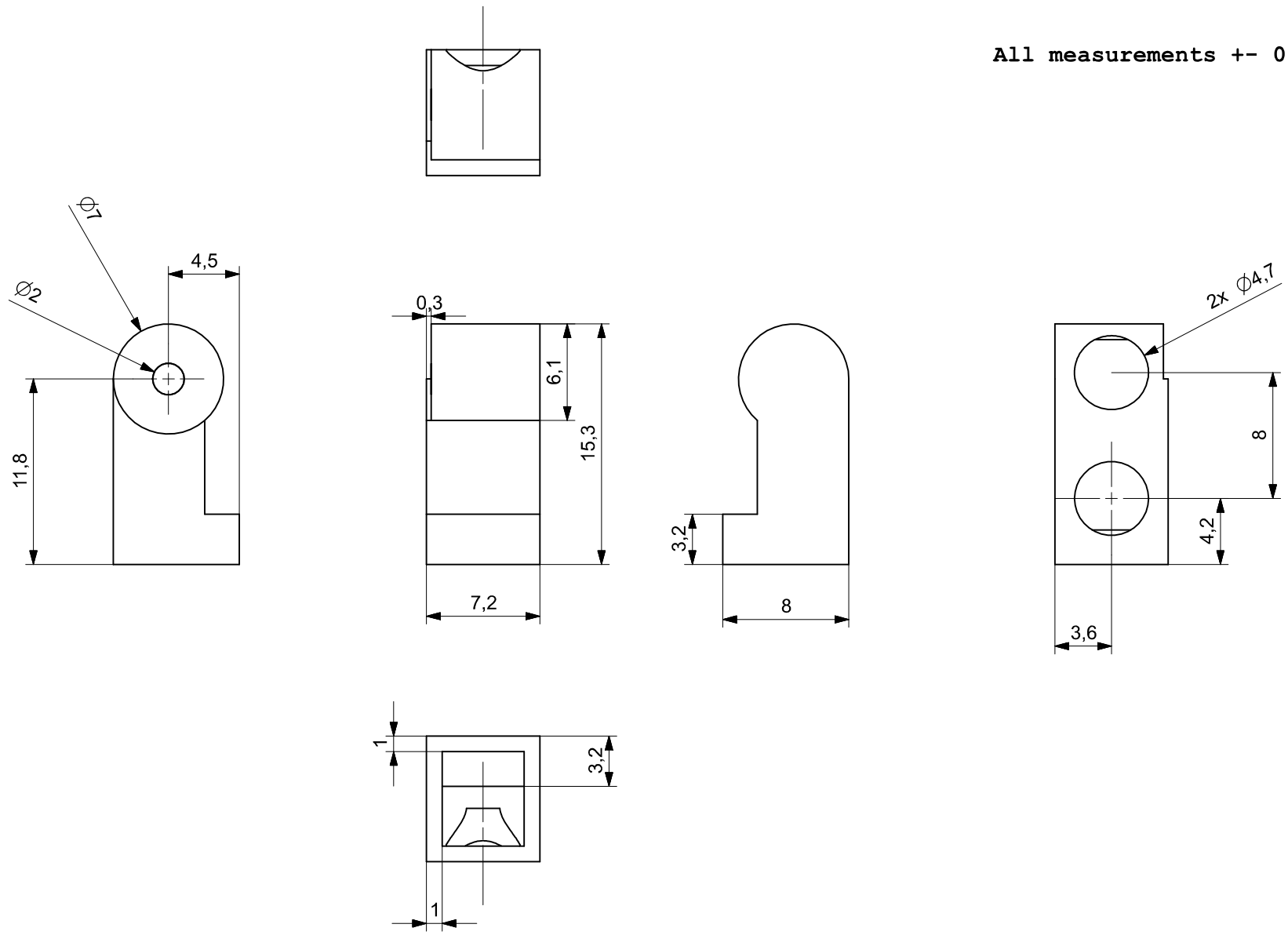

DEPARTMENT OF TECHNOLOGY ILLINOIS STATE UNIVERSITY NORMAL, ILLINOIS 61790	TITLE: RIGHT LEG		SCALE: 4:1
	DRAWN BY: DIFFOR, ALEX	DATE: 12-07-20	

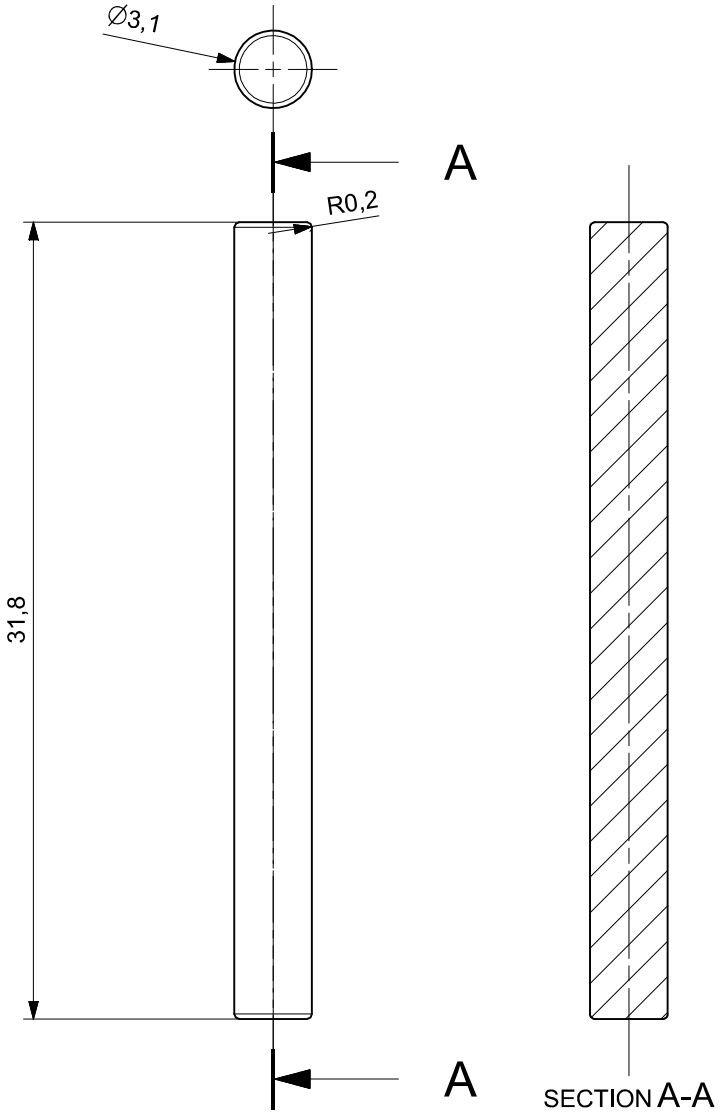

All measurements +- 0.01

DEPARTMENT OF TECHNOLOGY ILLINOIS STATE UNIVERSITY NORMAL, ILLINOIS 61790	TITLE: LIGHTSABER BLADE		SCALE: 5:1
	DRAWN BY: DIFFOR, ALEX	DATE: 12-07-20	

All measurements +- 0.01

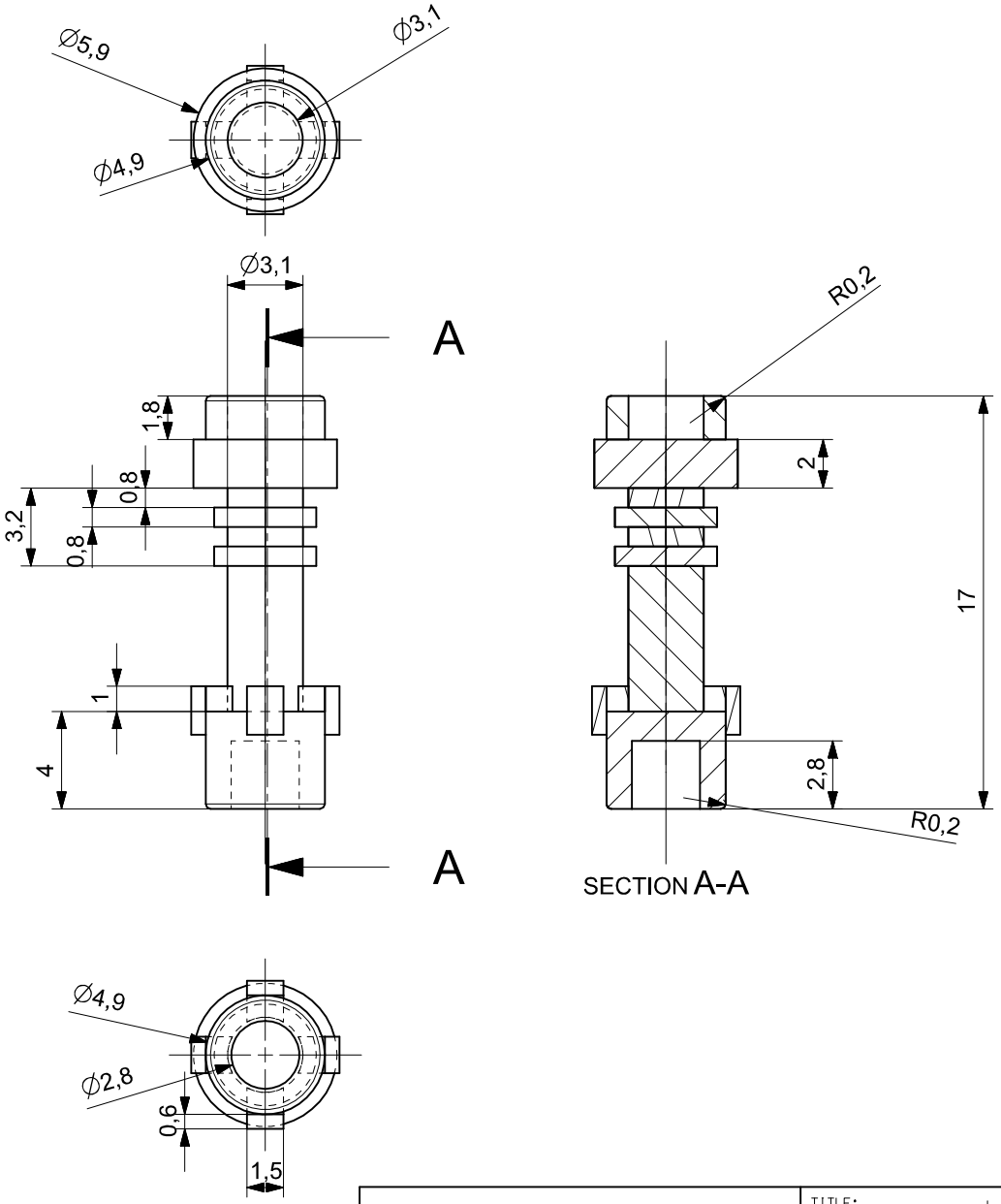

DEPARTMENT OF TECHNOLOGY ILLINOIS STATE UNIVERSITY NORMAL, ILLINOIS 61790	TITLE: LIGHTSABER HANDLE		SCALE: 5:1
	DRAWN BY: DIFFOR, ALEX	DATE: 12-07-20	

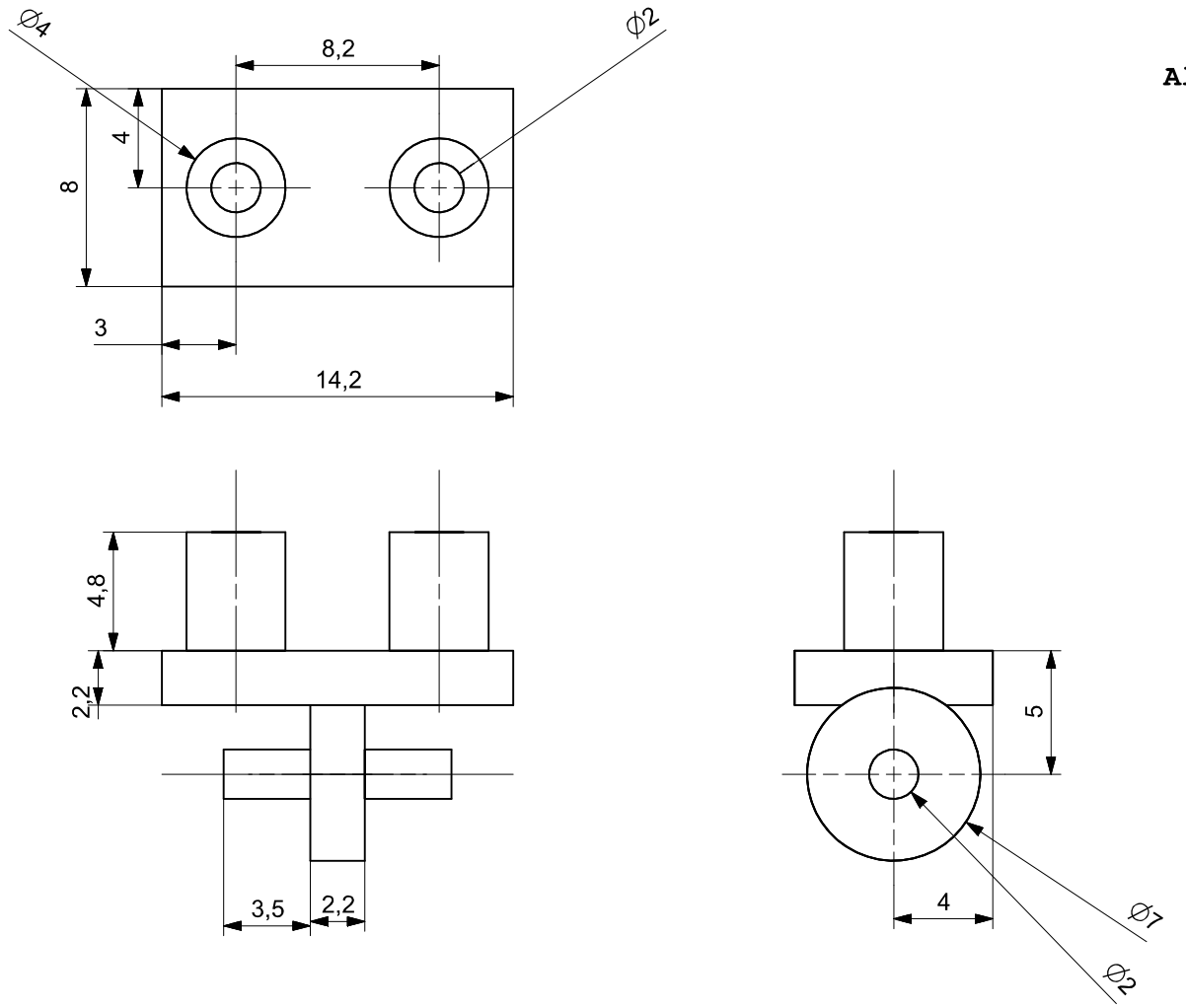

All measurements +- 0.01

DEPARTMENT OF TECHNOLOGY ILLINOIS STATE UNIVERSITY NORMAL, ILLINOIS 61790	TITLE: WAIST		SCALE: 5:1
	DRAWN BY: DIFFOR, ALEX	DATE: 12-07-20	

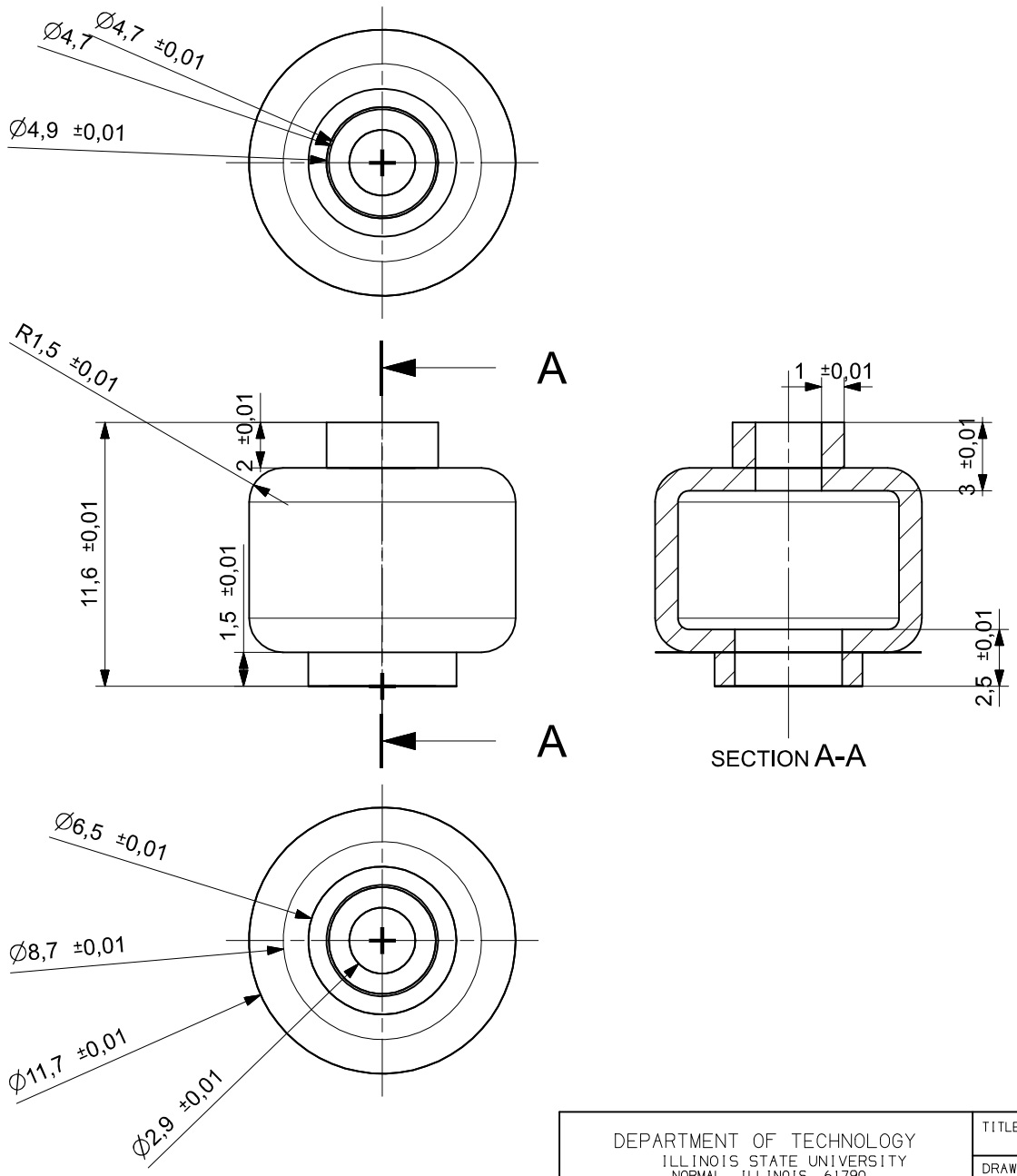

DEPARTMENT OF TECHNOLOGY ILLINOIS STATE UNIVERSITY NORMAL, ILLINOIS 61790	TITLE: HEAD		SCALE: 5:1
	DRAWN BY: DIFFOR, ALEX	DATE: 12-06-20	

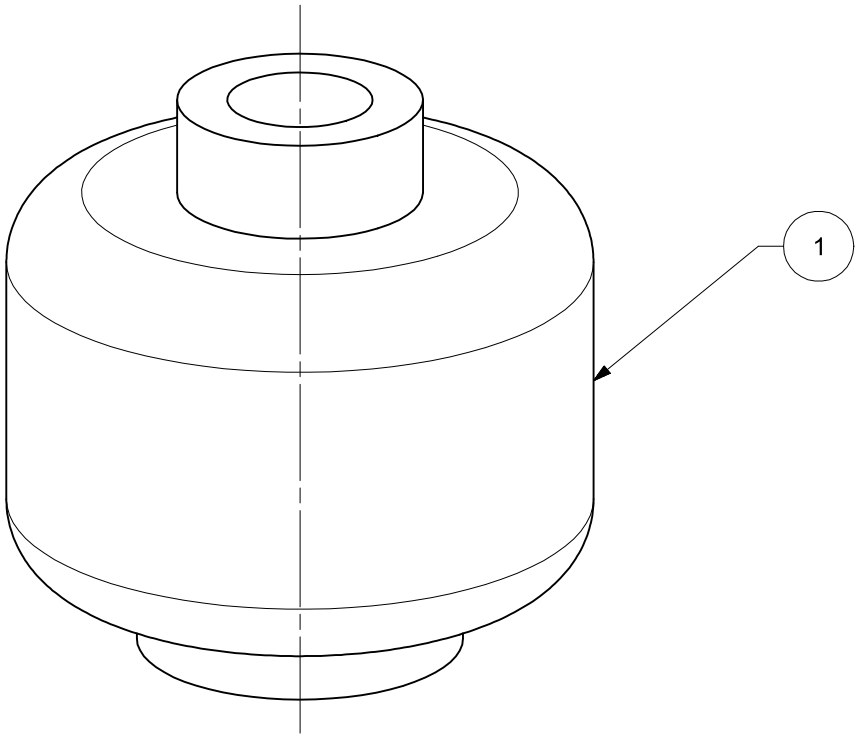

PC NO	PART NAME	QTY
1	LEGO_HEAD	1

DEPARTMENT OF TECHNOLOGY
ILLINOIS STATE UNIVERSITY
NORMAL, ILLINOIS 61790

TITLE: LEGO HEAD

SCALE: 10:1

DRAWN BY: DIFFOR, ALEX

DATE: 12-07-20

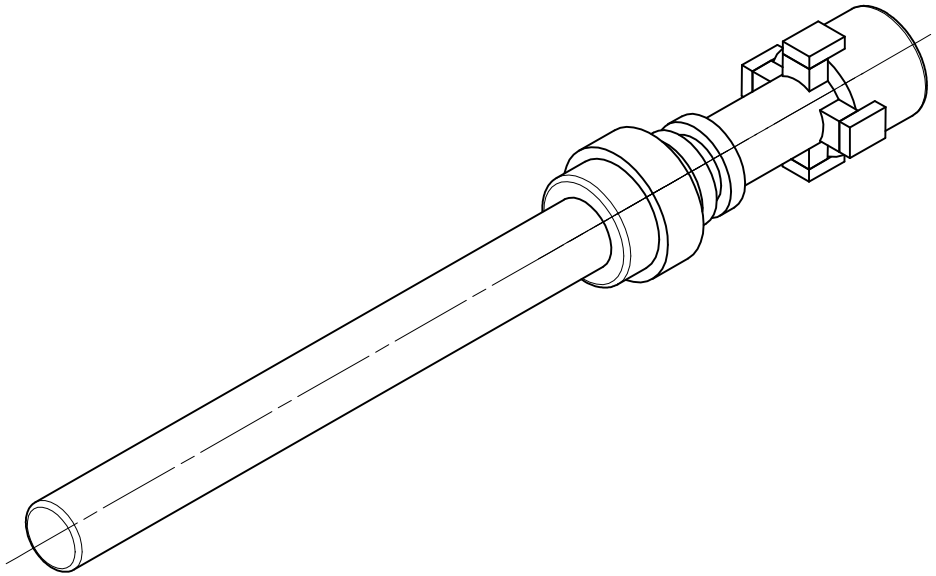

DEPARTMENT OF TECHNOLOGY ILLINOIS STATE UNIVERSITY NORMAL, ILLINOIS 61790	TITLE: LEGO LIGHTSABER		SCALE: 5:1
	DRAWN BY: DIFFOR, ALEX	DATE: 12-07-20	

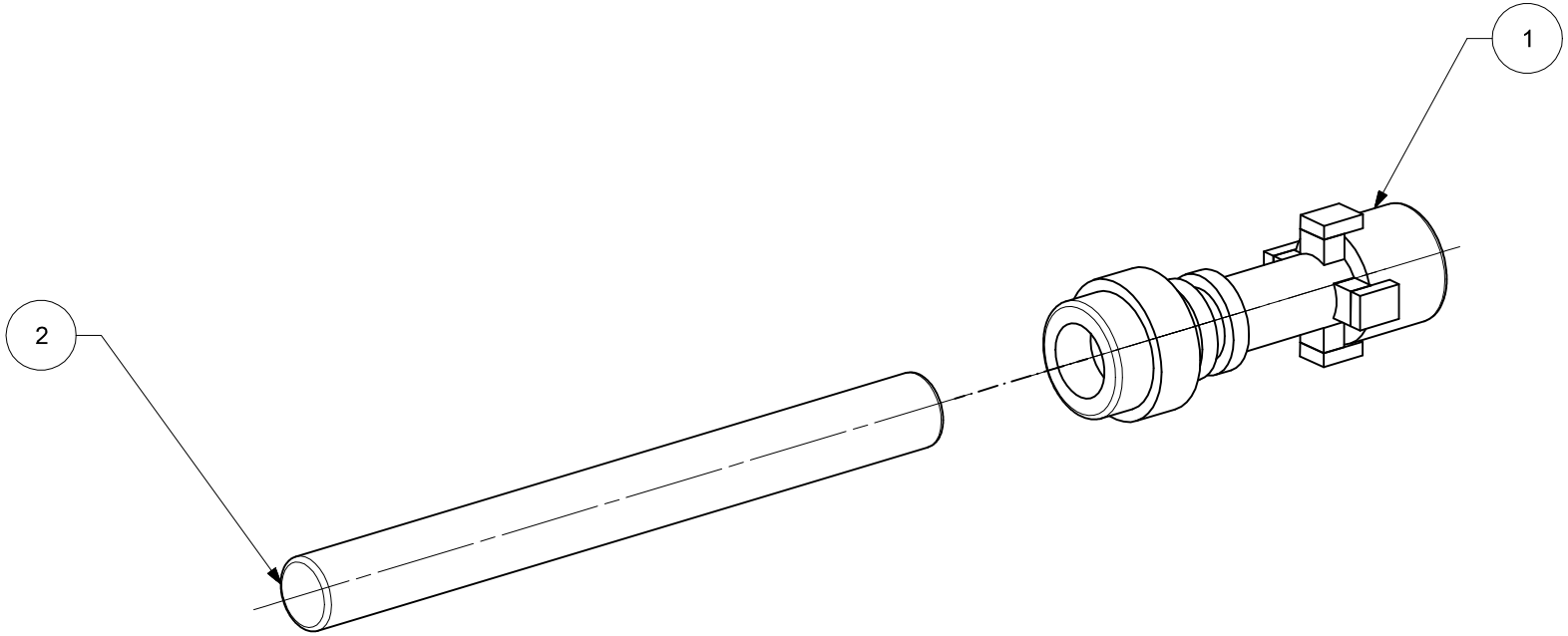

PC NO	PART NAME	QTY
2	LEGO_LIGHTSABER	1
1	LEGO_LIGHTSABER _HANDLE	1

DEPARTMENT OF TECHNOLOGY
ILLINOIS STATE UNIVERSITY
NORMAL, ILLINOIS 61790

TITLE: LEGO LIGHTSABER EXPLODED

SCALE: 5:1

DRAWN BY: DIFFOR, ALEX

DATE: 12-07-20

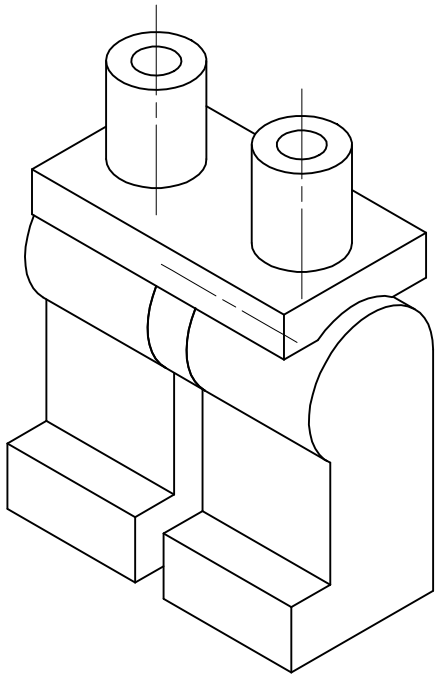

DEPARTMENT OF TECHNOLOGY ILLINOIS STATE UNIVERSITY NORMAL, ILLINOIS 61790	TITLE: LEGO MAN LOWER		SCALE: 4:1
	DRAWN BY: DIFFOR, ALEX	DATE: 12-07-20	

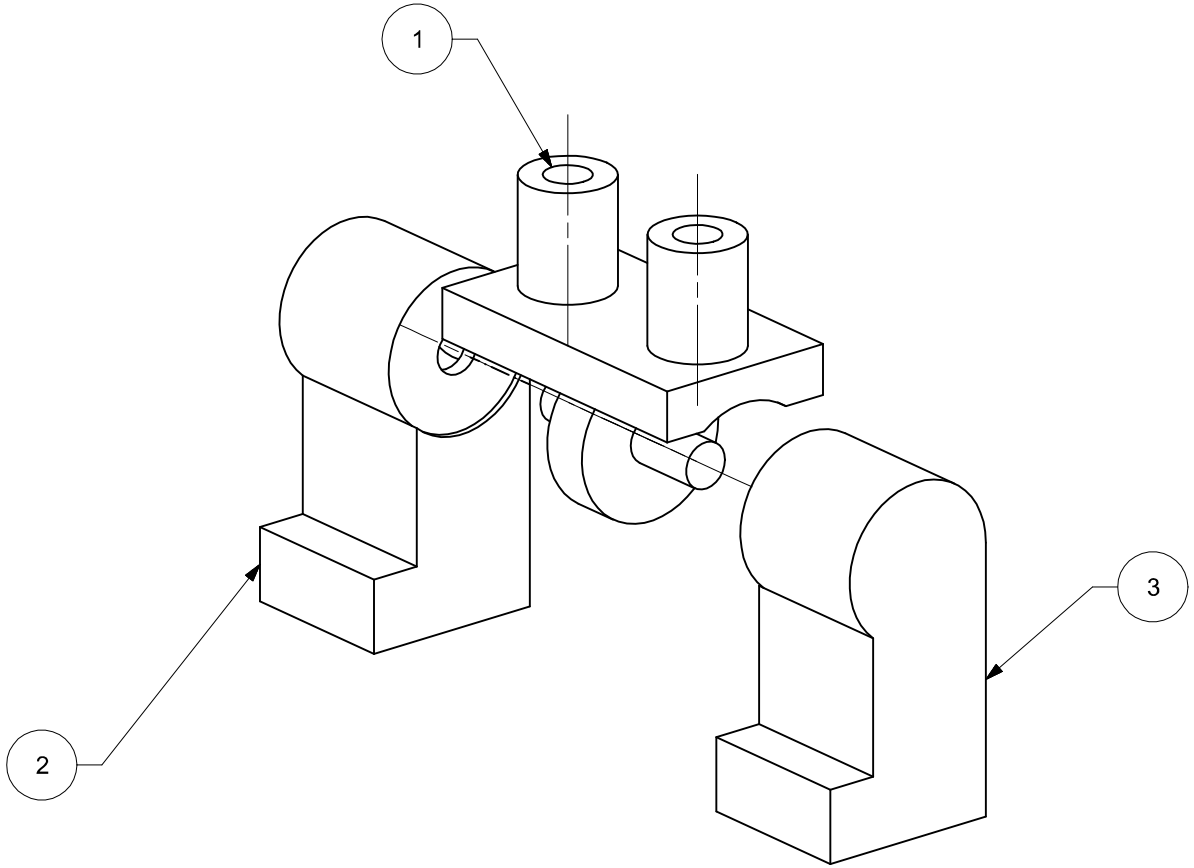

PC NO	PART NAME	QTY
3	LEGO_RIGHT_LEG	1
2	LEGO_LEFT_LEG	1
1	LEGO_WAIST	1

DEPARTMENT OF TECHNOLOGY
ILLINOIS STATE UNIVERSITY
NORMAL, ILLINOIS 61790

TITLE: LEGO MAN LOWER EXPLODED

SCALE: 5:1

DRAWN BY: DIFFOR, ALEX

DATE: 12-07-20

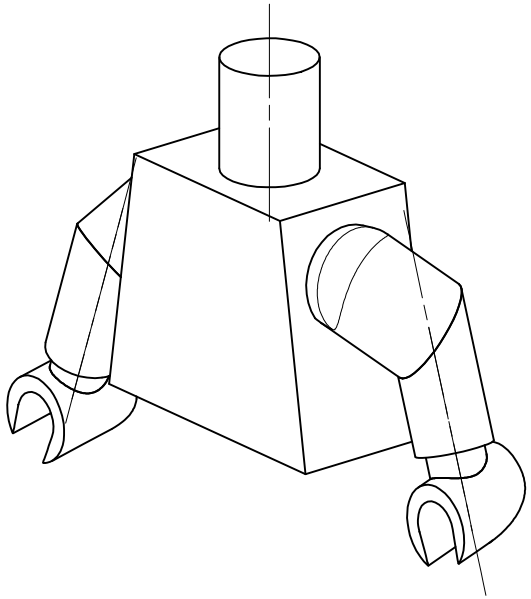

DEPARTMENT OF TECHNOLOGY ILLINOIS STATE UNIVERSITY NORMAL, ILLINOIS 61790	TITLE: LEGO MAN UPPER		SCALE: 4:1
	DRAWN BY: DIFFOR, ALEX	DATE: 12-07-20	

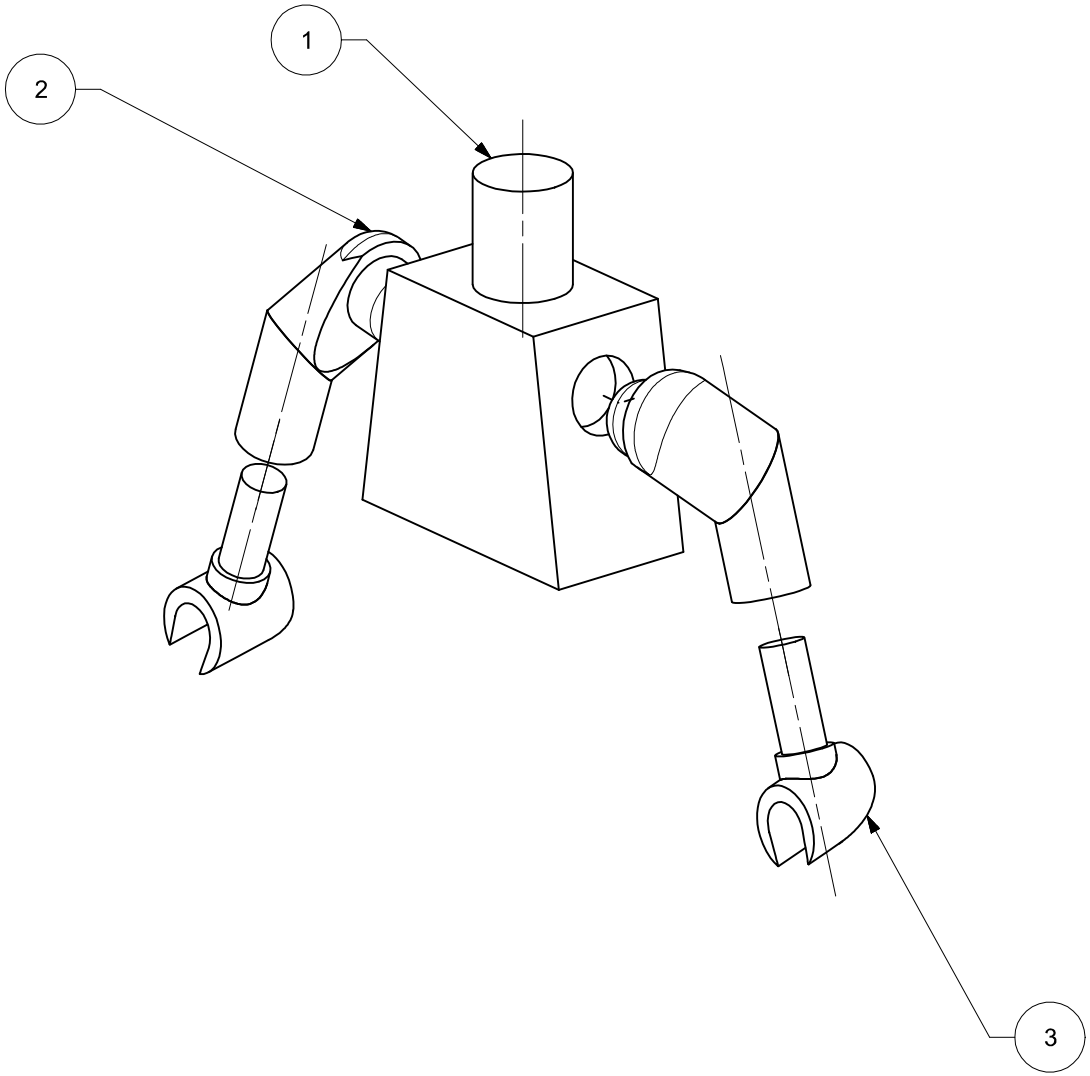

PC NO	PART NAME	QTY
3	LEGO_HAND	2
2	LEGO_LEFT_ARM	2
1	LEGO_CHEST	1

DEPARTMENT OF TECHNOLOGY
ILLINOIS STATE UNIVERSITY
NORMAL, ILLINOIS 61790

TITLE: LEGO MAN UPPER EXPLODED

SCALE: 4:1

DRAWN BY: DIFFOR, ALEX

DATE: 12-07-20

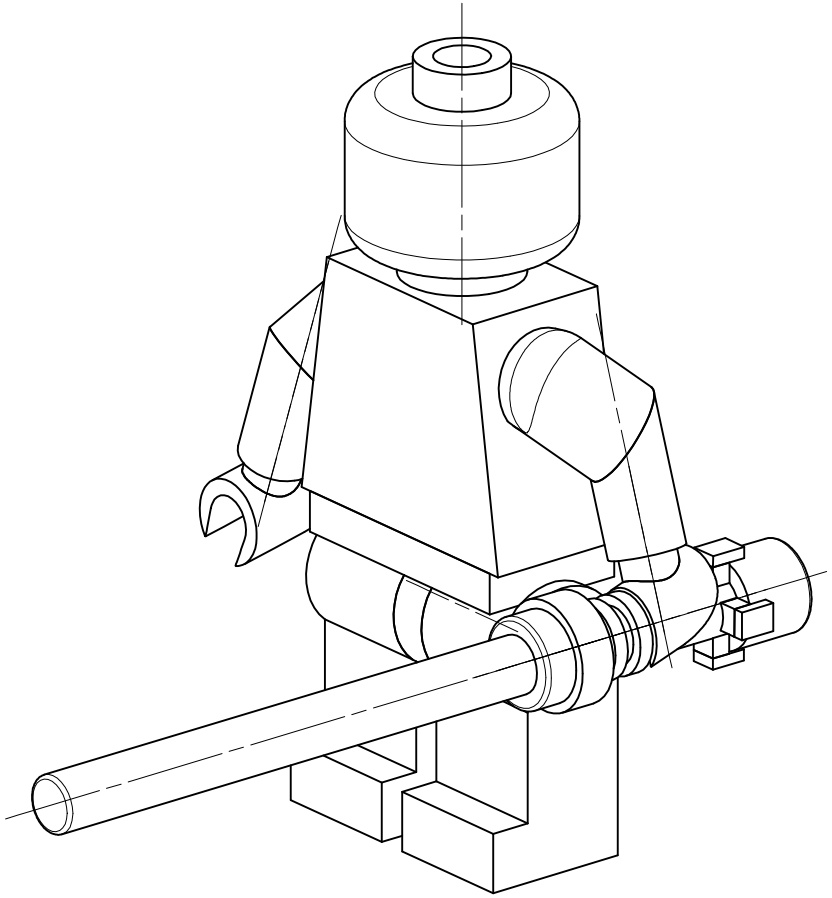

DEPARTMENT OF TECHNOLOGY ILLINOIS STATE UNIVERSITY NORMAL, ILLINOIS 61790	TITLE: LEGO MAN ASSEMBLED		SCALE: 4:1
	DRAWN BY: DIFFOR, ALEX	DATE: 12-07-20	

PC NO	PART NAME	QTY
9	LEGO_LIGHTSABER	1
8	LEGO_LIGHTSABER_ HANDLE	1
7	LEGO_HAND	2
6	LEGO_RIGHT_LEG	1
5	LEGO_LEFT_LEG	1
4	LEGO_WAIST	1
3	LEGO_LEFT_ARM	2
2	LEGO_HEAD	1
1	LEGO_CHEST	1

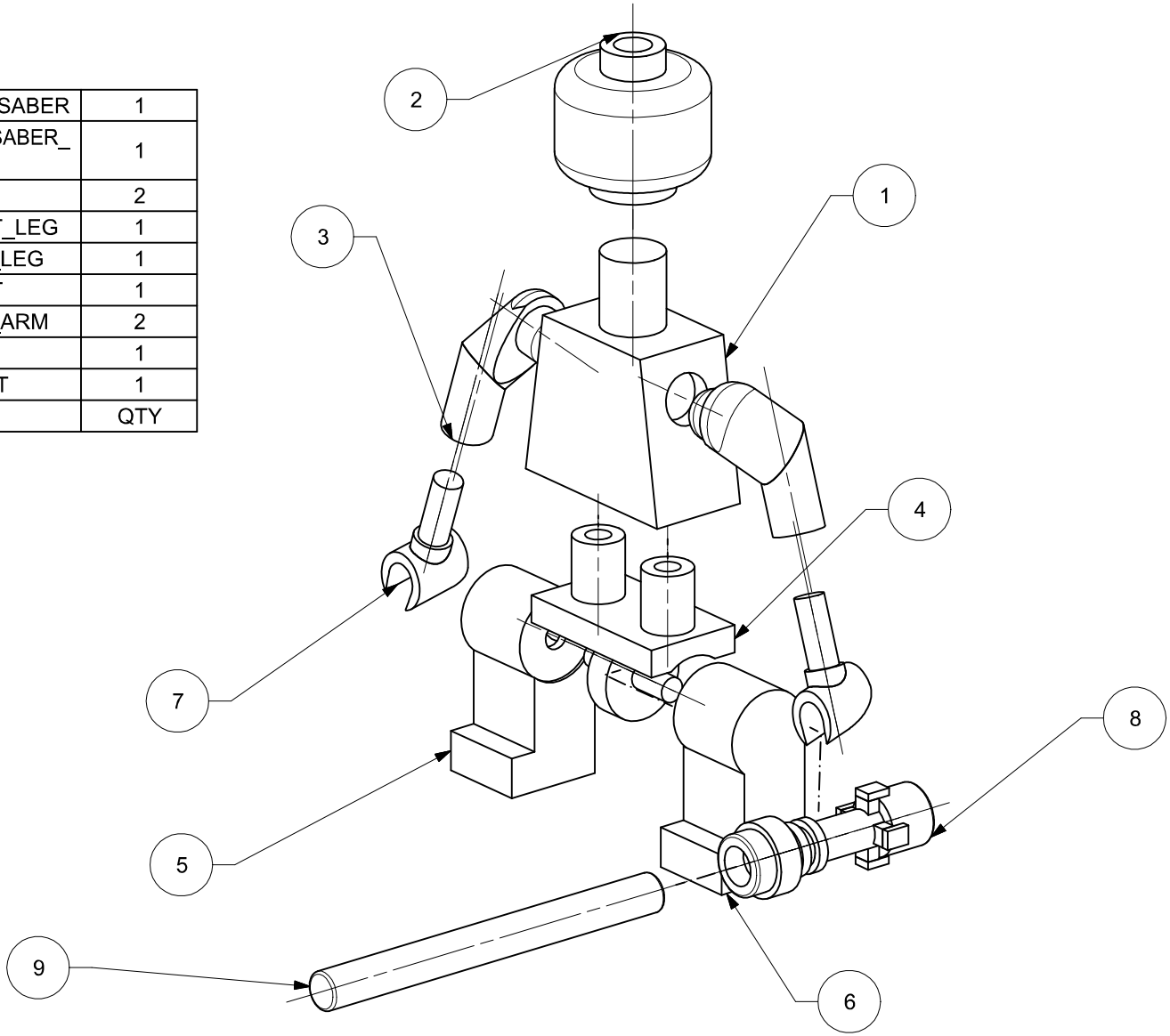

DEPARTMENT OF TECHNOLOGY ILLINOIS STATE UNIVERSITY NORMAL, ILLINOIS 61790	TITLE: LEGO MAN ASSEMBLY EXPLODED		SCALE: 3:1
	DRAWN BY: DIFFOR, ALEX	DATE: 12-07-20	