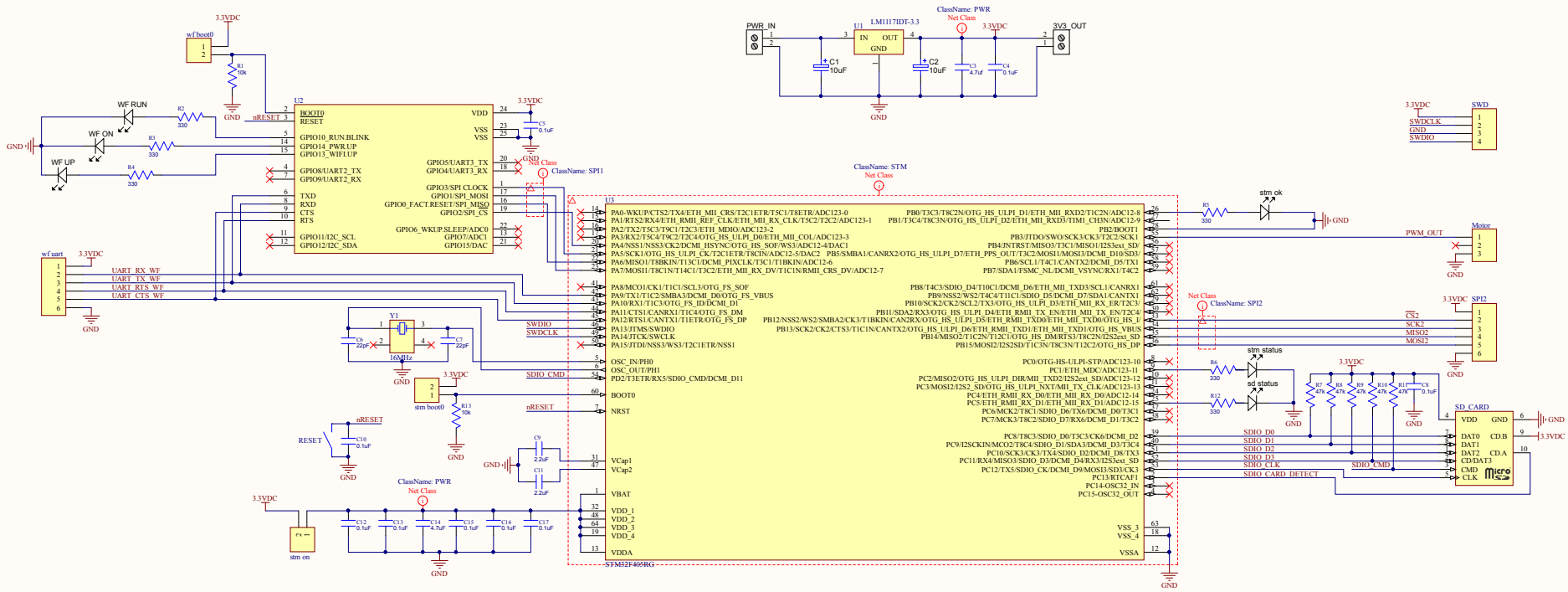


| Title | | |
|---|---|---|
| Size A2 | Number | Revision |
| Date: 24.10.2014 | Sheet of | |
| File: E:\synology\...\stm_intf_motor.SchDoc | Drawn By: | |