Figure 1. Right-hand Mecanum Wheel Front View

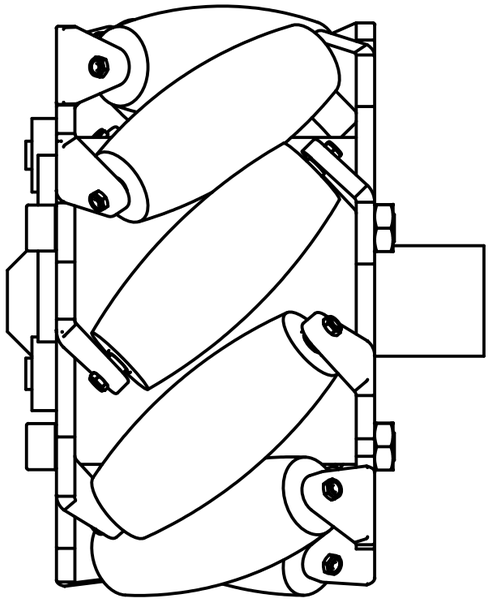

Figure 2. Right-hand Mecanum Wheel Left View

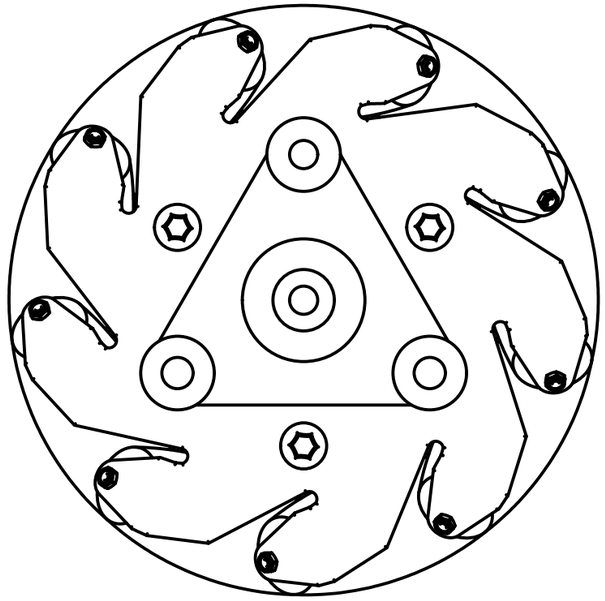

Figure 3. Right-hand Mecanum Wheel RigthView

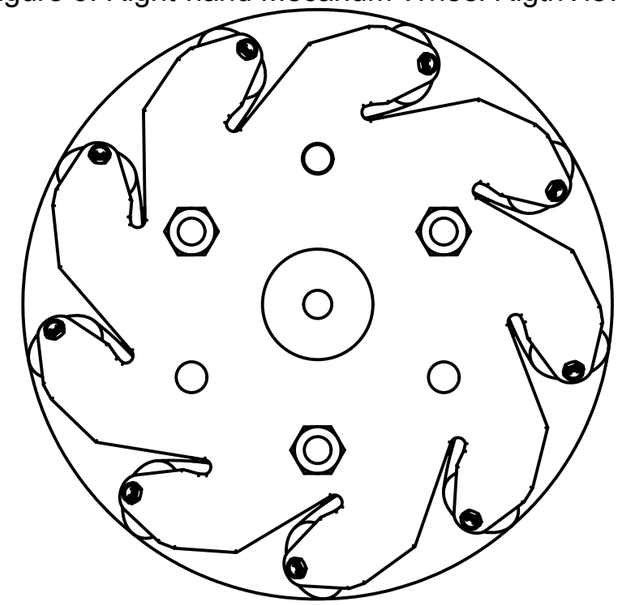

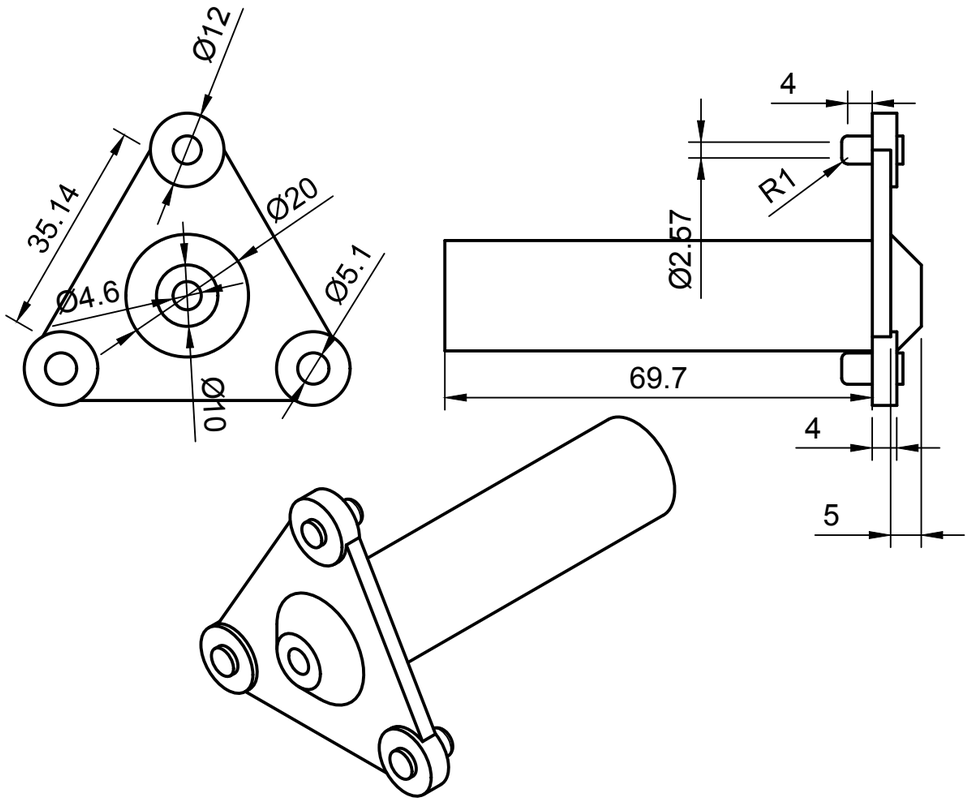

Figure 5. Custom wheel bracket with dimensions with three different views

Figure 4. Right-hand Mecanum Wheel Isometric View

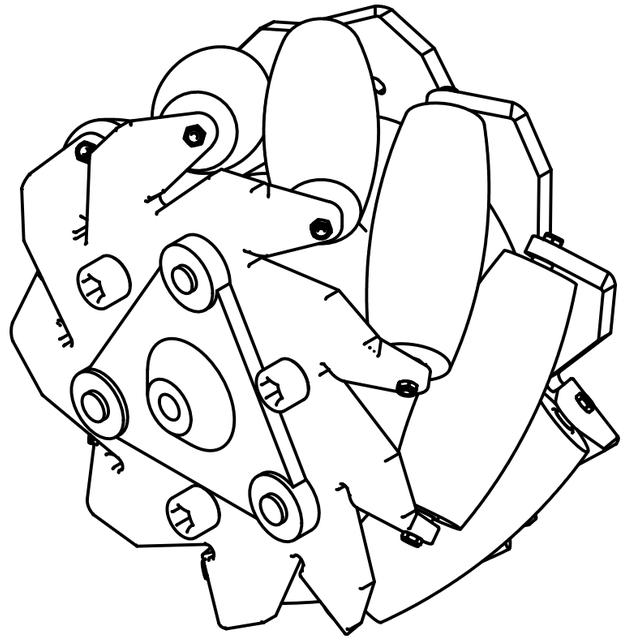

Dept.	Technical reference	Created by Aditya Prawira 23/04/2021	Approved by
		Document type Mecanum Model Drawing	Document status
		Title 100mm Mecanum Wheel Model Custom Wheel Bracket	DWG No.
			Rev. / Date of issue 21/06/2021 / Sheet 1/1