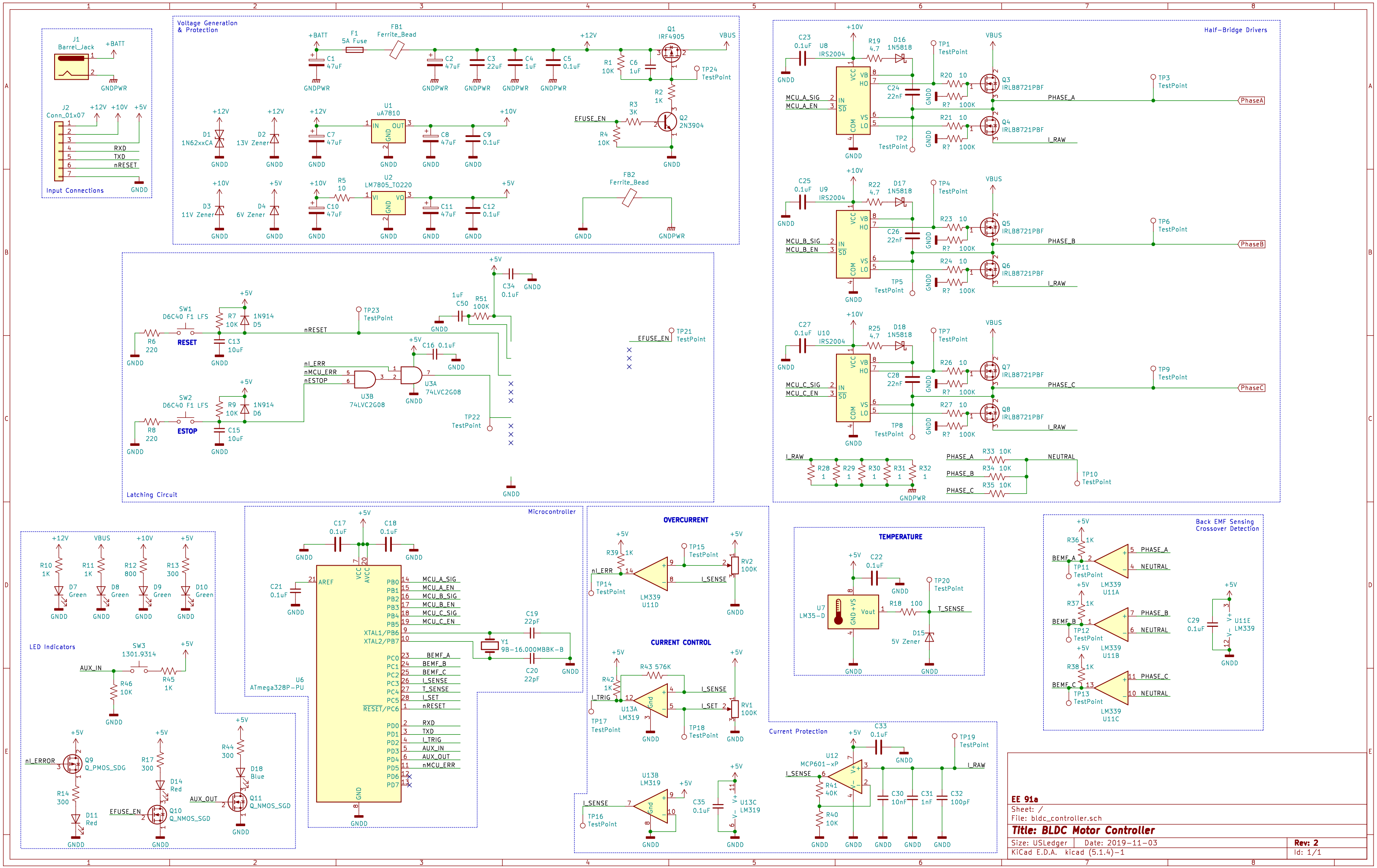
Input Connections
Voltage Generation & Protection
Half-Bridge Drivers
Latching Circuit
Microcontroller
OVERCURRENT
TEMPERATURE
Back EMF Sensing Crossover Detection
LED Indicators
CURRENT CONTROL
Current Protection
EE 91a
Sheet: /
File: bldc_controller.sch
Title: BLDC Motor Controller
Size: USLedger
Date: 2019-11-03
Rev: 2
KiCad E.D.A. kicad (5.1.4)-1
Id: 1/1