ELECTRONICS WORKSHOP

AUDIO POWER AMPLIFIER

VAISHNAVI SHIVKUMAR, ADITHI SAMUDRALA
2022102070, 2022102065

CONTENT

01 DESIGN STRUCTURE

02 CALCULATIONS

03 CIRCUIT SIMULATION

04 HARDWARE IMPLEMENTATION

05 OBSERVATIONS AND INFERENCE

DESIGN

DESIGN STRUCTURE

Amplification

This stage consists of a differential amplifier (to remove noise), and a common source amplifier to further amplify the signal.

Filtering

This stage contains a second order filter, it order to remove noise (signals of frequency higher than 20kHz and less than 20Hz

Power Amp

This stage consists of a Class AB power amplifier to increase the power of the signal. We do this in order to be able fit the voltage requirements of the speaker.

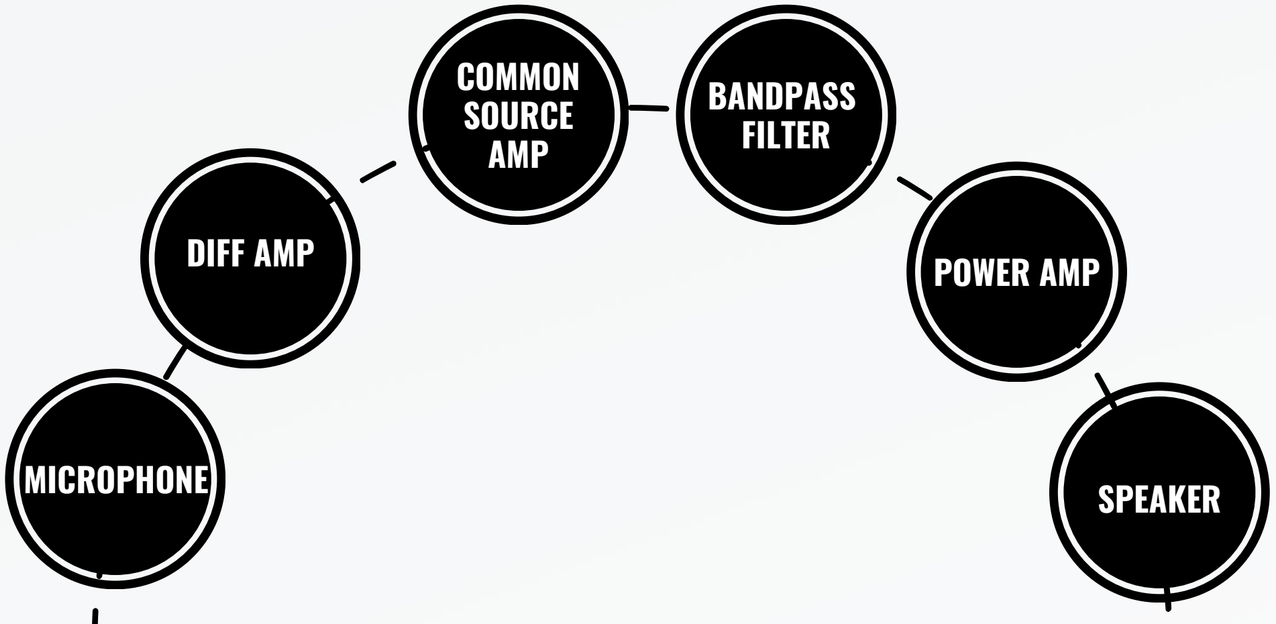

DIFFERENTIAL AMPLIFIER

It amplifies the difference between two input signals and eliminates common noise called the common mode signal. Our input voltage is small because we want the MOSFETs to operate in saturation to use them as amplifiers.

CS AMPLIFIER

We use BJT's in our CS amplifer because of their higher transconductance (gm) compared to MOSFETs. BJTs can provide higher gain and better performance in certain frequency ranges. In our design, one of the above terminals is grounded because we a need a certain biasing point for the BJTs to remain in active mode. By observation and analysis, we get a biasing point of -6V. We put a capacitor in between the pre amp stage and cs amp to remove any dc voltage.

Buffer

We used a non-inverting op-amp as buffer for the following reasons:

- *Impedance Matching: Inserting a buffer with an input impedance matched to the output impedance of the amplifier stages helps mitigate this mismatch, ensuring efficient signal transfer from the amplifiers to the filter circuit.*
- *Avoiding Loading Effects: Similarly, the filter circuit may impose a load on the amplifier stages, affecting their performance. If the filter circuit's input impedance is significantly lower than the output impedance of the amplifier stages, it can cause loading effects, leading to signal degradation, distortion, or attenuation. By adding a buffer with a high input impedance, the buffer isolates the amplifier stages from the loading effects of the filter circuit, preserving their performance.*

FILTER STAGE

We use an active bandpass filter. An active bandpass filter is a type of electronic circuit that allows a specific range of frequencies to pass through while attenuating frequencies outside of this range. It typically consists of active components such as operational amplifiers (op-amps) along with passive components like resistors and capacitors. Active filters typically have low output impedance, which enables them to drive loads directly without significant signal loss. This is particularly beneficial since the filter output needs to be connected to subsequent stages.

POWER AMPLIFIER

An AB power amplifier combines the efficiency of Class B amplifiers with the low distortion of Class A amplifiers. It operates primarily in Class AB mode, where each half of the signal waveform is amplified by a separate set of transistors. This reduces crossover distortion, which occurs when there's a gap between the positive and negative halves of the waveform.

To avoid crossover distortion, AB power amplifiers use a biasing mechanism that keeps a small amount of current flowing through the output transistors at all times. This minimizes the transition between the positive and negative halves of the waveform, resulting in smoother output.

CALCULATIONS

MICROPHONE

In our microphone circuit we take V+ as 10V, the capacitance as 10uF, and the resistance as 10k.

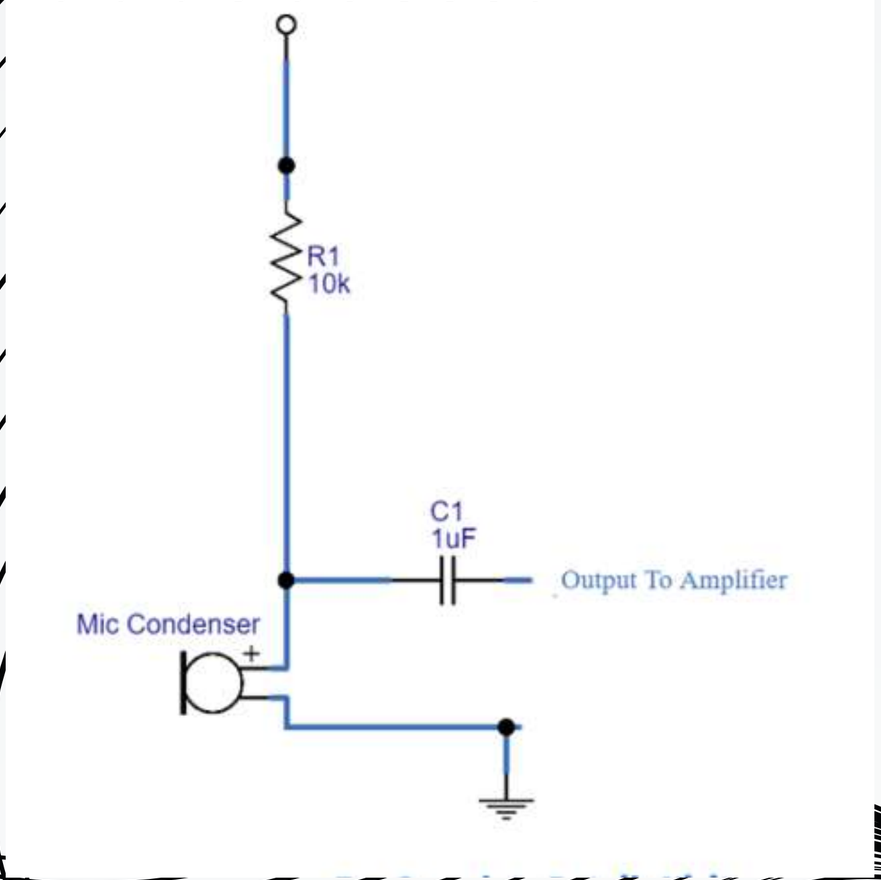

DIFF AMP STAGE

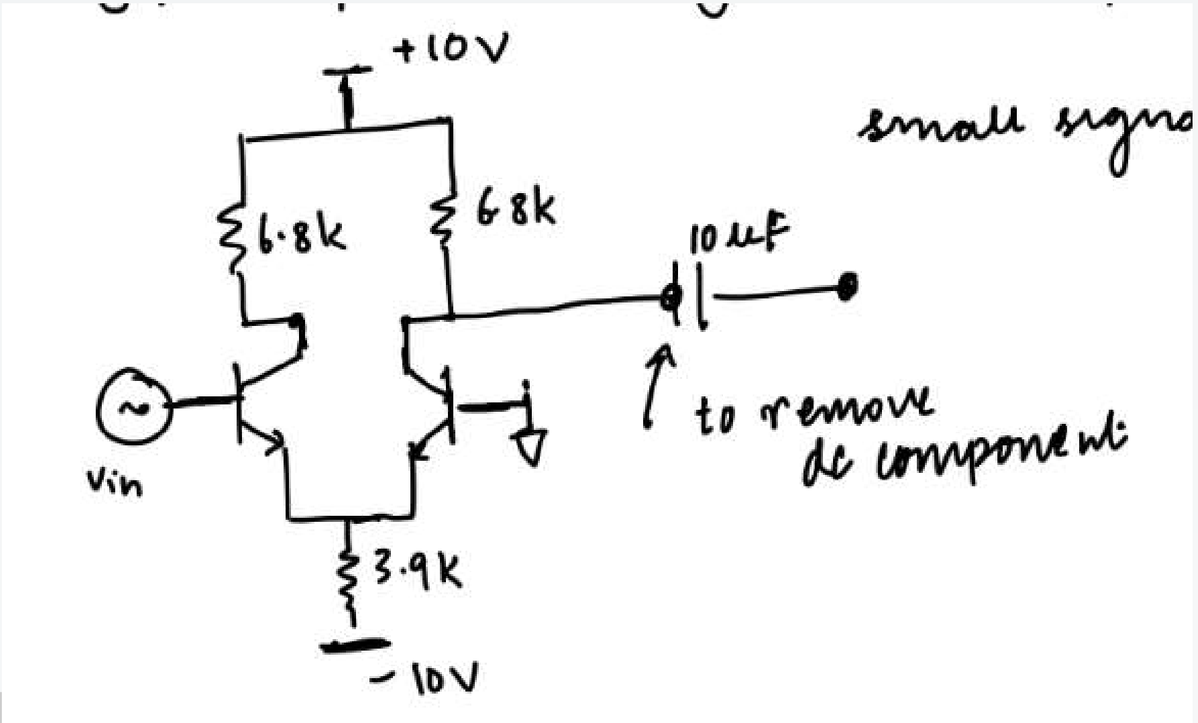

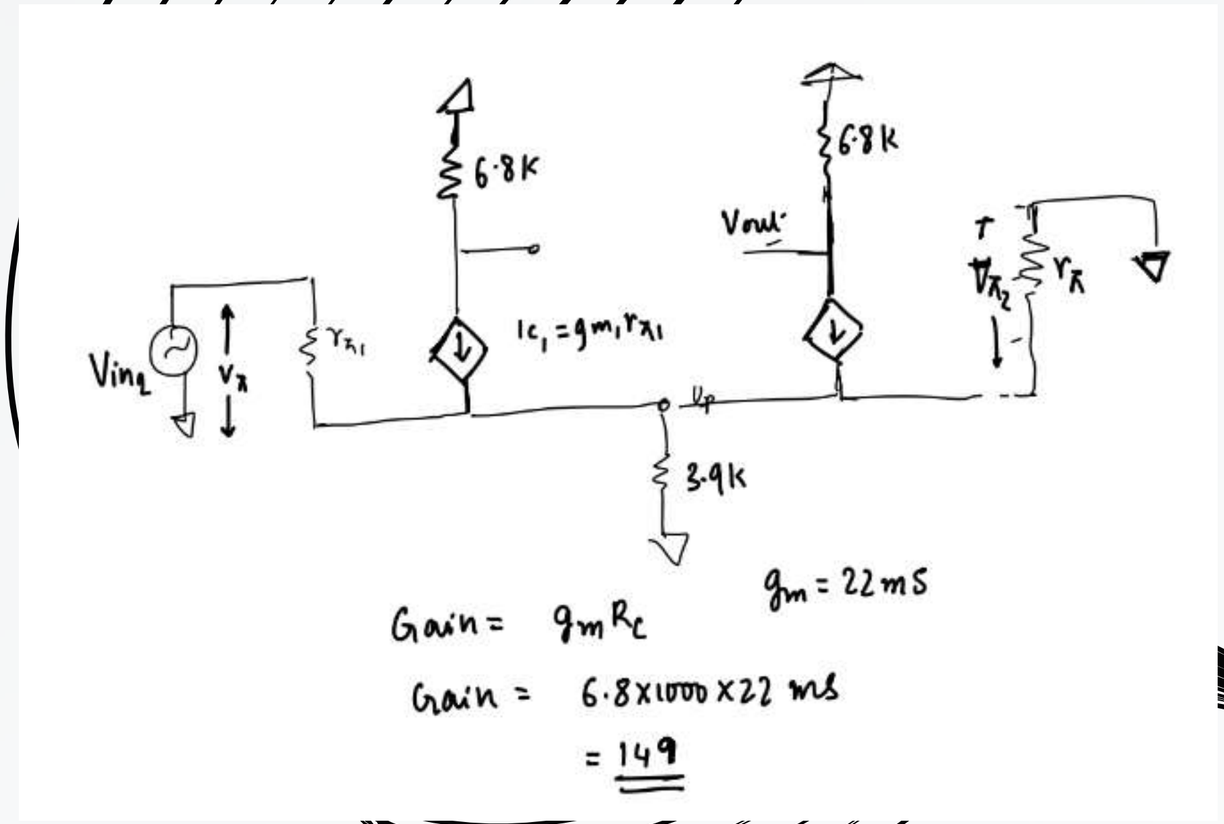

DIFF AMP STAGE

OUTPUT IMPEDENCE = 2* 6.8K = 13..6K

we wanted around 150 gain from this amplifier ;

$$V_{in_1} - V_{x_1} = V_p = V_{in_2} - V_{x_2}.$$

Given: $V_{in_2} = 0$

$$V_{in_1} - V_{in_2} = V_{x_1} - V_{x_2}$$

$$V_{o_1} - V_{o_2} = -g_m V_{x_1} R_c + g_m V_{x_2} R_c$$

$$= -g_m R_c [V_{in_1} - V_{in_2}]$$

$$\text{Gain} = \frac{V_{o_1} - V_{o_2}}{V_{in_1} - V_{in_2}}$$

$$\text{Gain} = -g_m R_c$$

$$-150 = 22\,mS \cdot R_c$$

$$\boxed{R_c \approx 6.8k}$$

CS AMP STAGE

We use 15k and 10k resistors to create a voltage divider. When we sweep our mosfet we find the ideal bias voltage to be -6V.

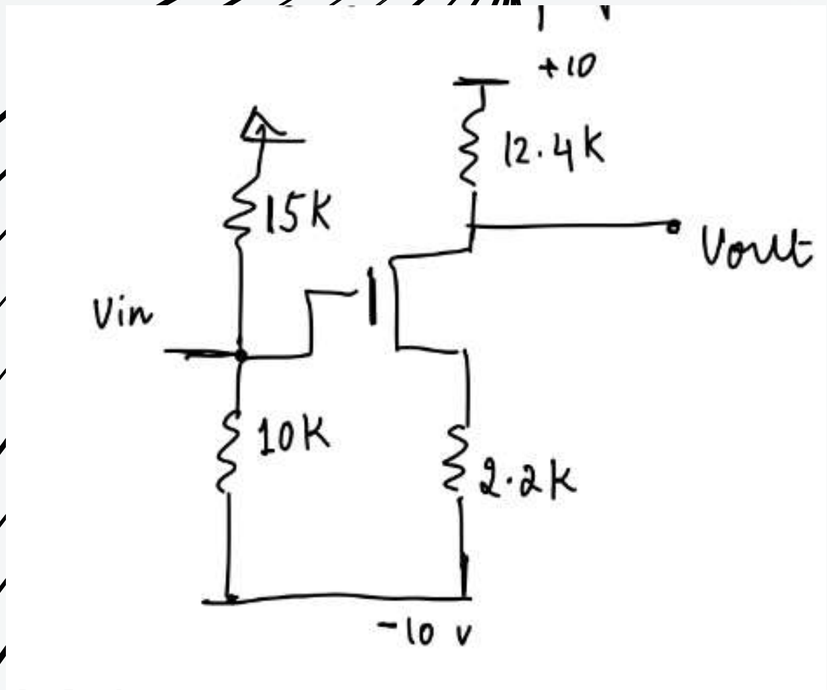

Gain = $-g_m R_D$

for 2n7000 $K_p = 0.0093 A/V^2$

$V_{T0} = 2.23V$

$g_m R_D = 0.0093 \times 2(-6-2.23) \times 10^{-3} \times 12.4 \times 10^{3}$

-1.89 (using calculations)

FILTER STAGE

We keep a buffer between the CS amplifier and the filter stage.

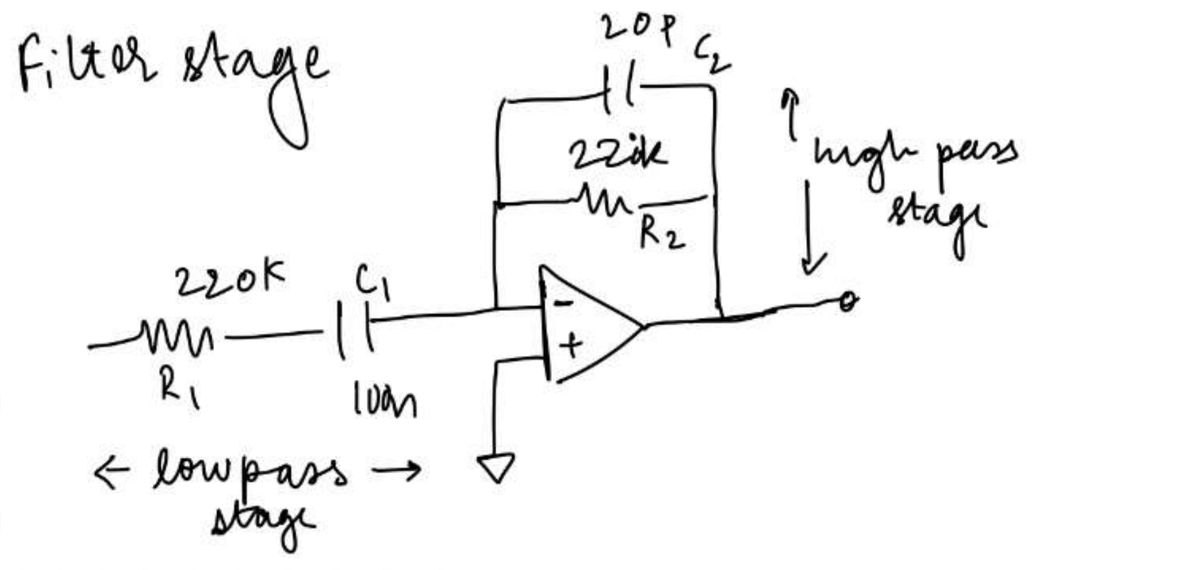

the following are the cutoffs

$$\text{Gain} = \frac{-220K}{220K} = 1 \quad \left(-\frac{R_2}{R_1}\right)$$

$$f_{c_1} = \frac{1}{2\pi R_1 C_1} = \frac{1}{2\pi \times 220K \times 10n} = 7.23\,Hz$$

$$f_{c_2} = \frac{1}{2\pi R_2 C_2} = \frac{1}{2 \cdot \pi \cdot 220K \cdot 20p} = 36.189\,KHz$$

POWER AMP STAGE

THE SMALL BIAS VOLTAGE GIVEN USING DIODES D1 AND D2, AS SHOWN IN THE ABOVE FIGURE, HELPS THE OPERATING POINT TO BE ABOVE THE CUTOFF POINT. HENCE THE OUTPUT WAVEFORM OF CLASS AB RESULTS AS SEEN IN THE ABOVE FIGURE. THE CROSSOVER DISTORTION CREATED BY CLASS B IS OVERCOME BY CLASS AB, AS WELL THE INEFFICIENCIES OF CLASS A AND B DON'T AFFECT THE CIRCUIT.

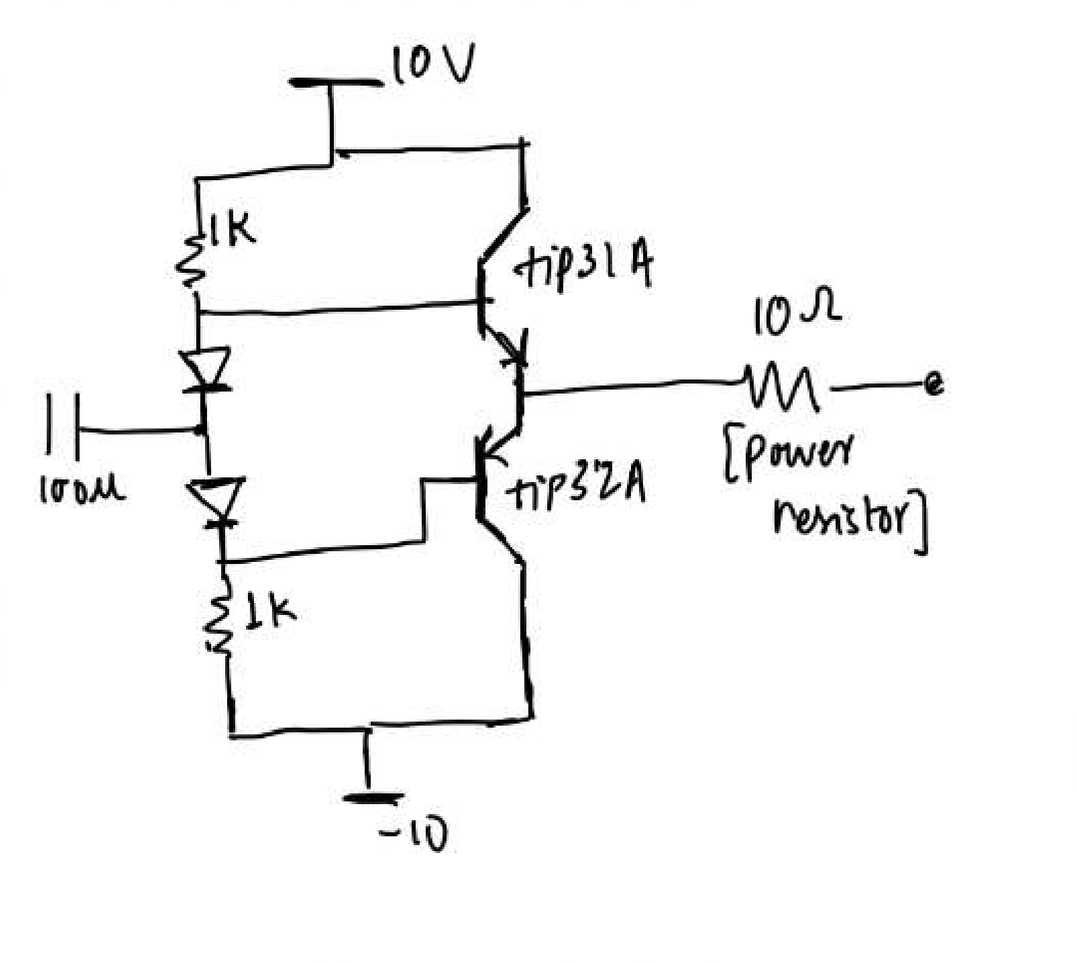

SIMULATIONS

DIFFERENTIAL AMPLIFIER

Here the input is 10mV, and the output is 1.3V. So gain is approximately 130.

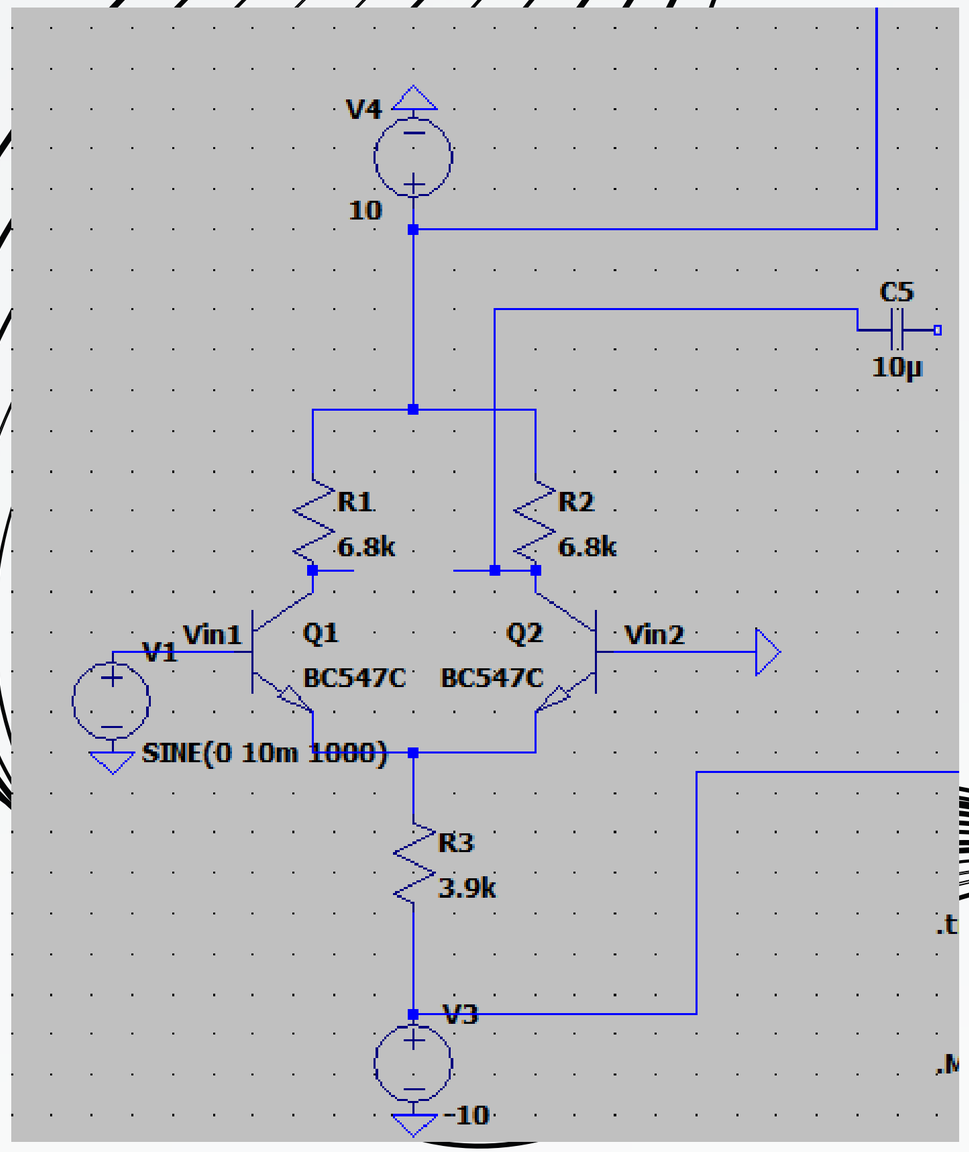

DIFFERENTIAL AMPLIFIER

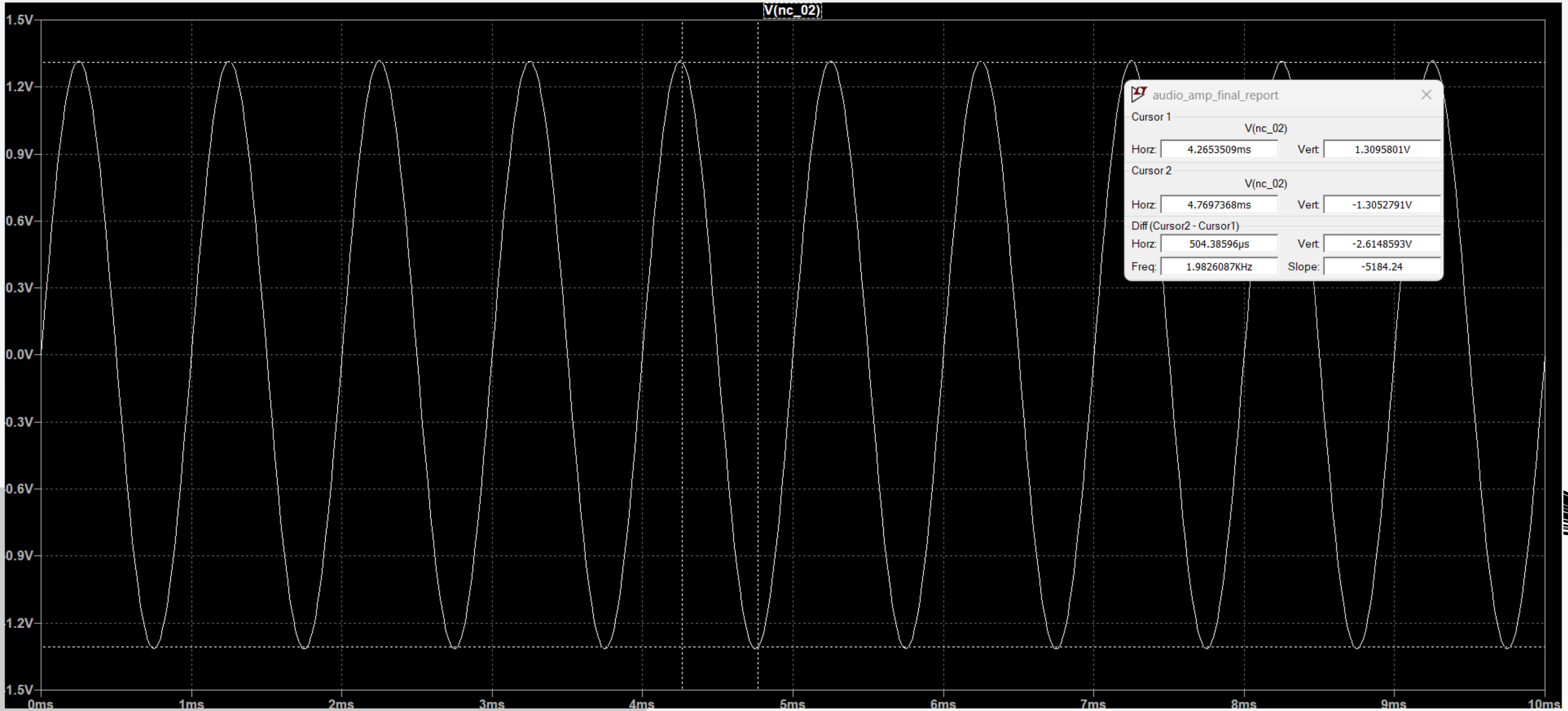

CS AMPLIFIER

Here, the input is around 1.3V, and the output is 3.5 volts (amplitude). gain is 2.67

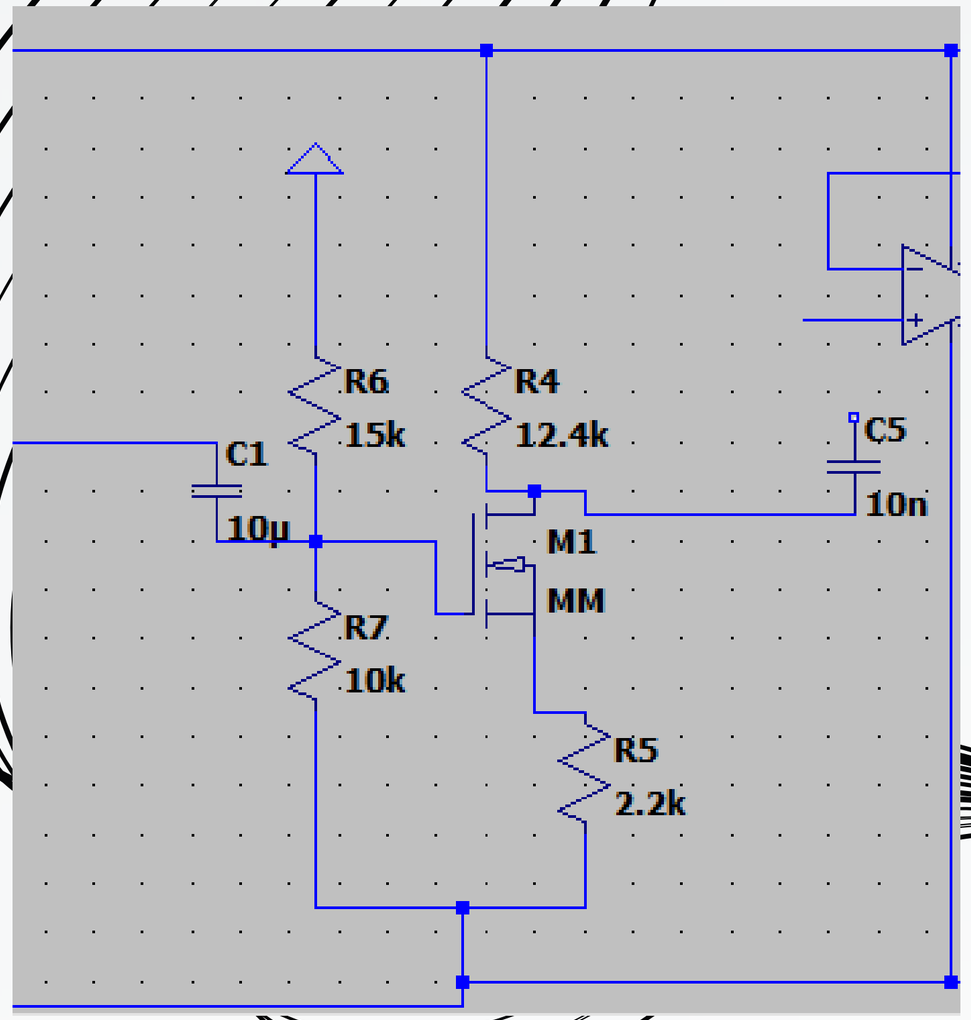

CS AMPLIFIER

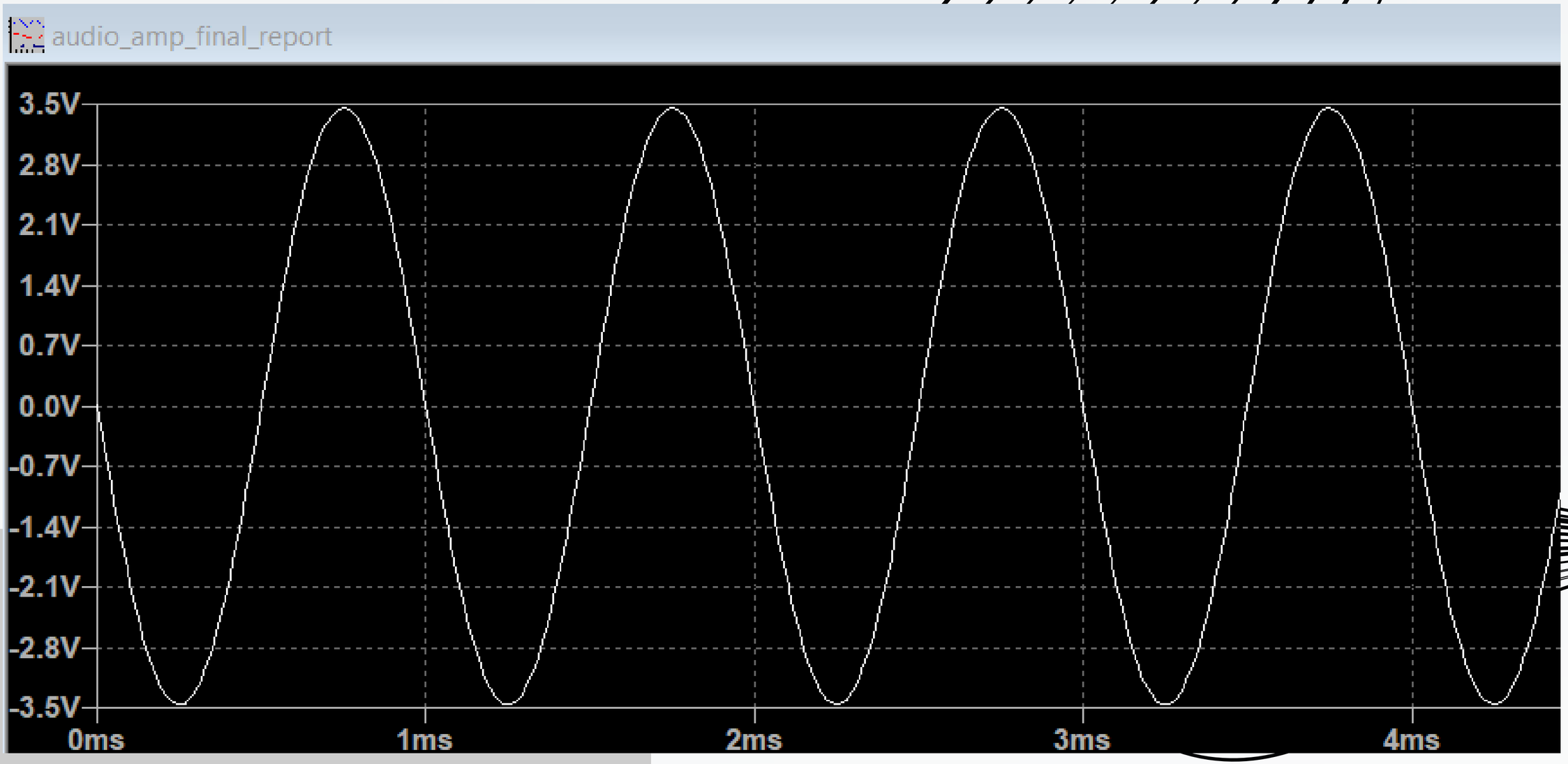

BAND PASS FILTER

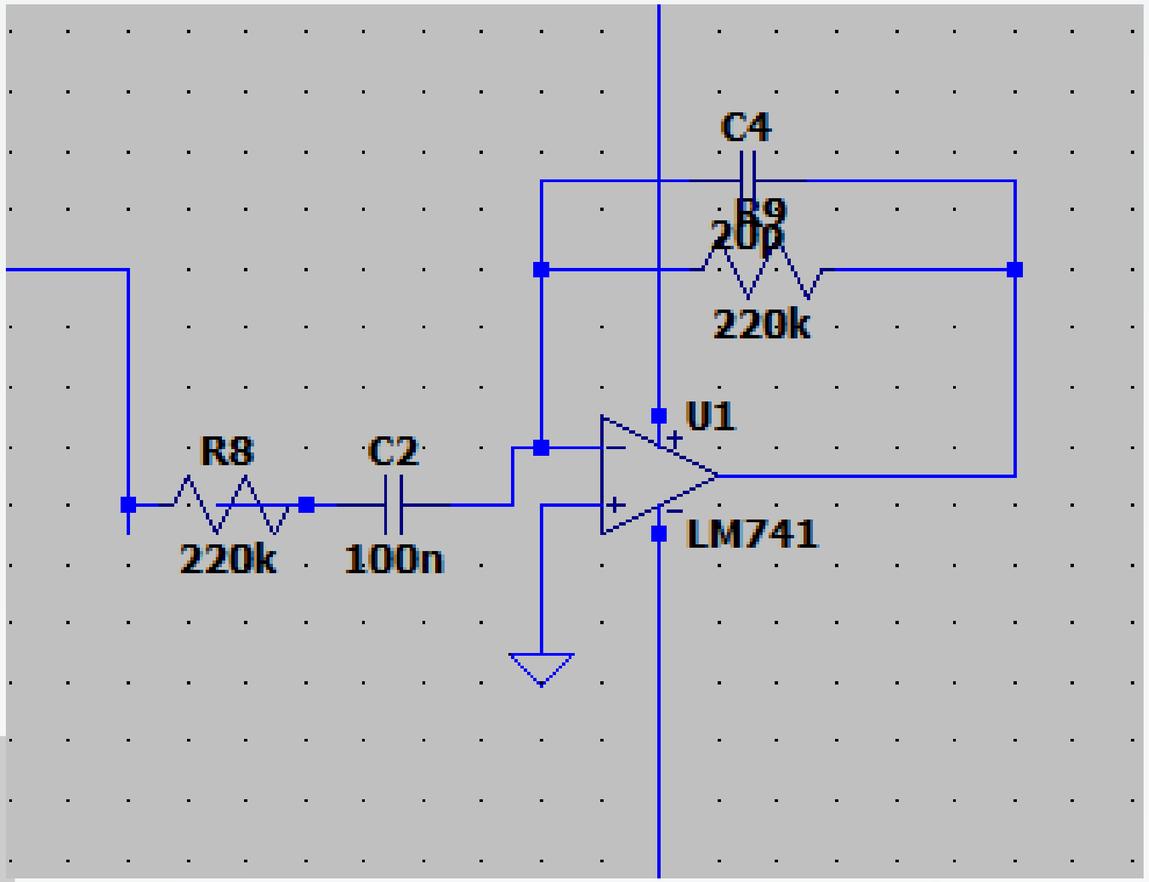

BAND PASS FILTER

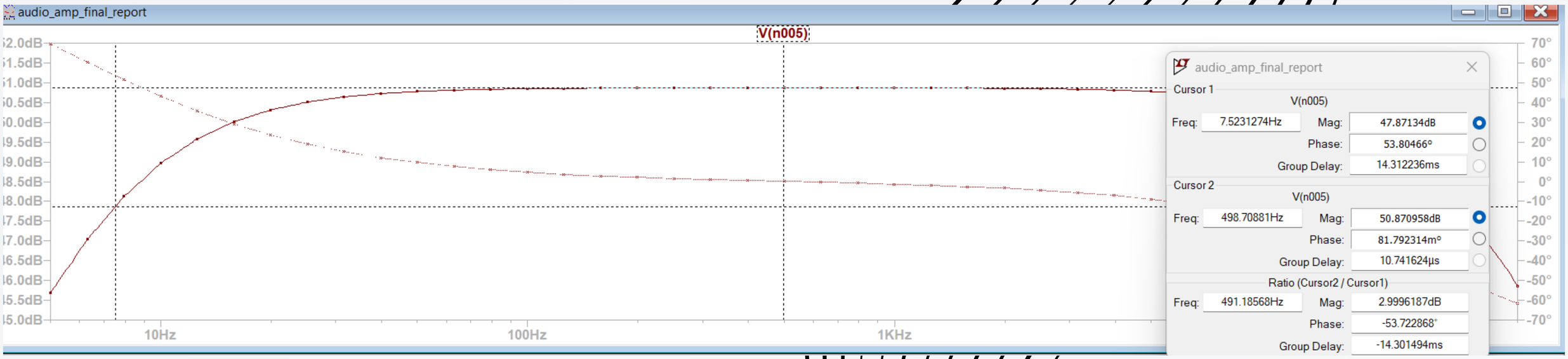

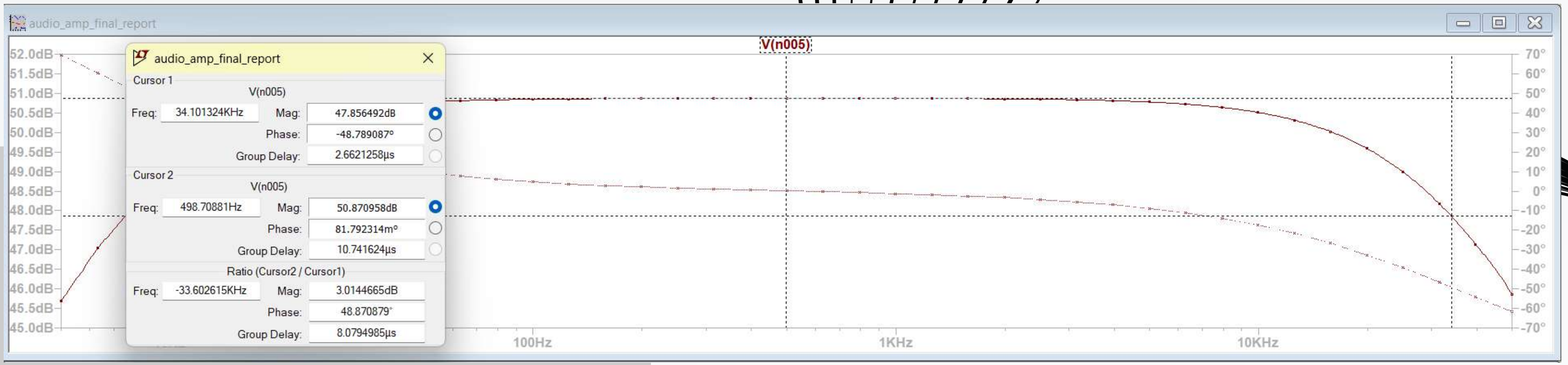

POWER AMPLIFIER

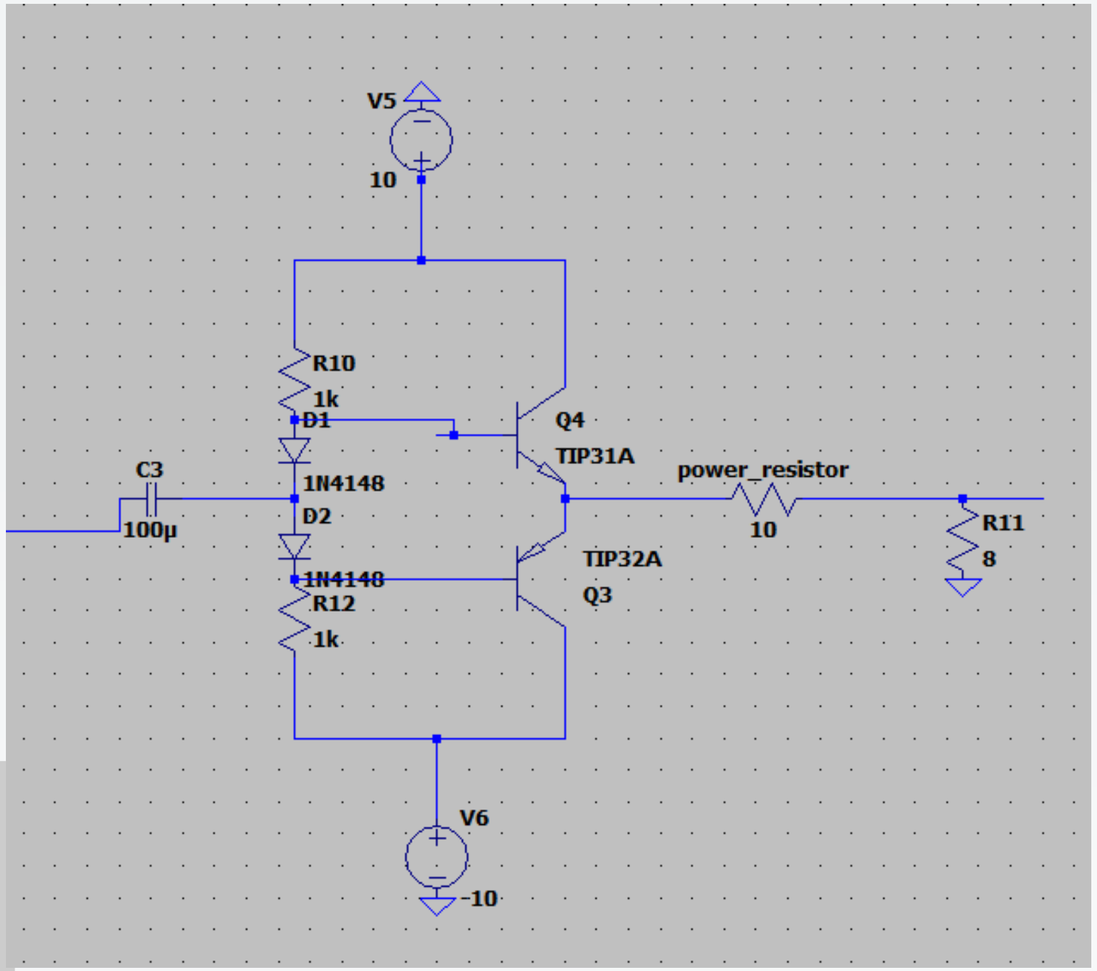

POWER AMPLIFIER/FINAL CKT

VOLTAGE

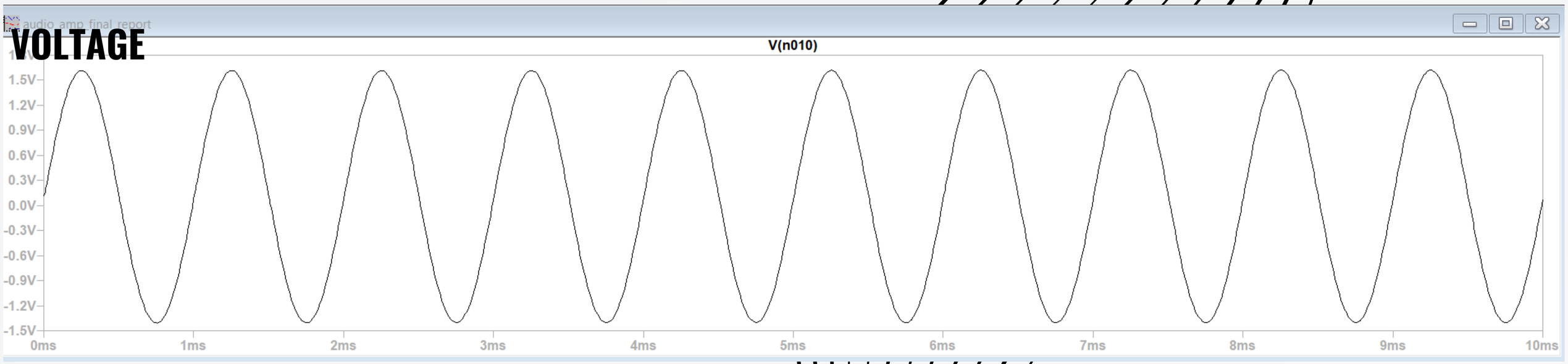

POWER

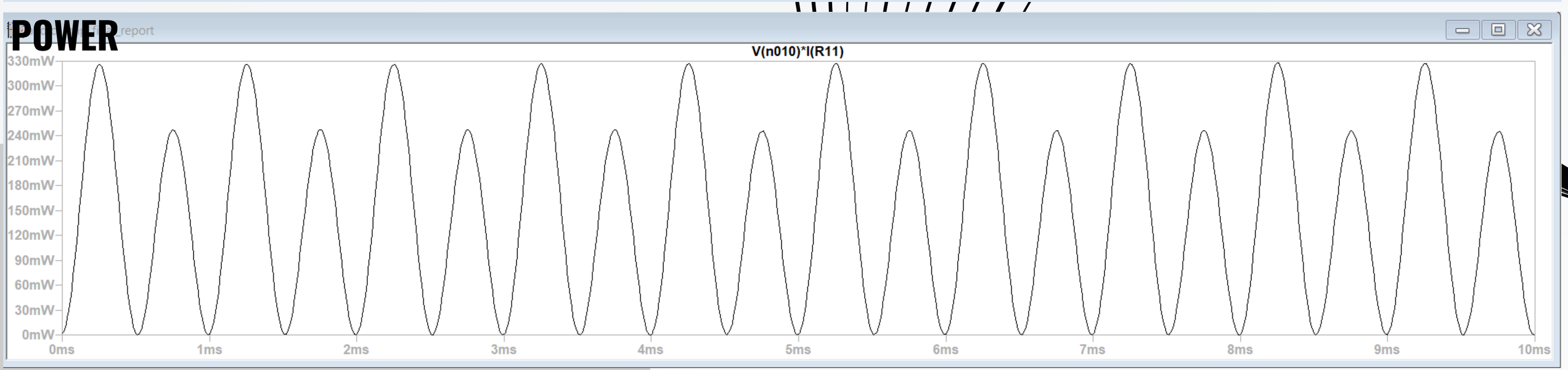

FINAL CIRCUIT DIAGRAM

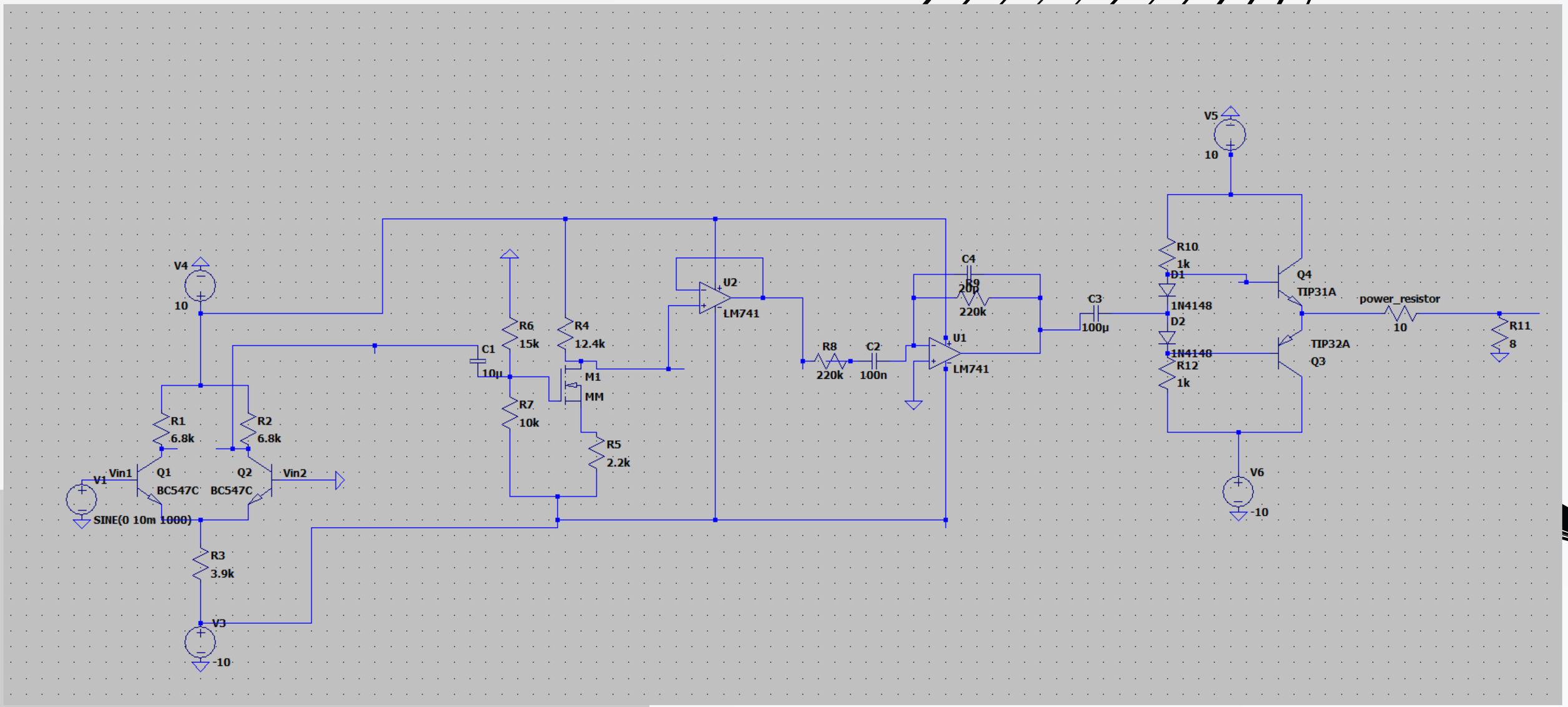

HARDWARE IMPLEMENTATION

Differential Amplifier

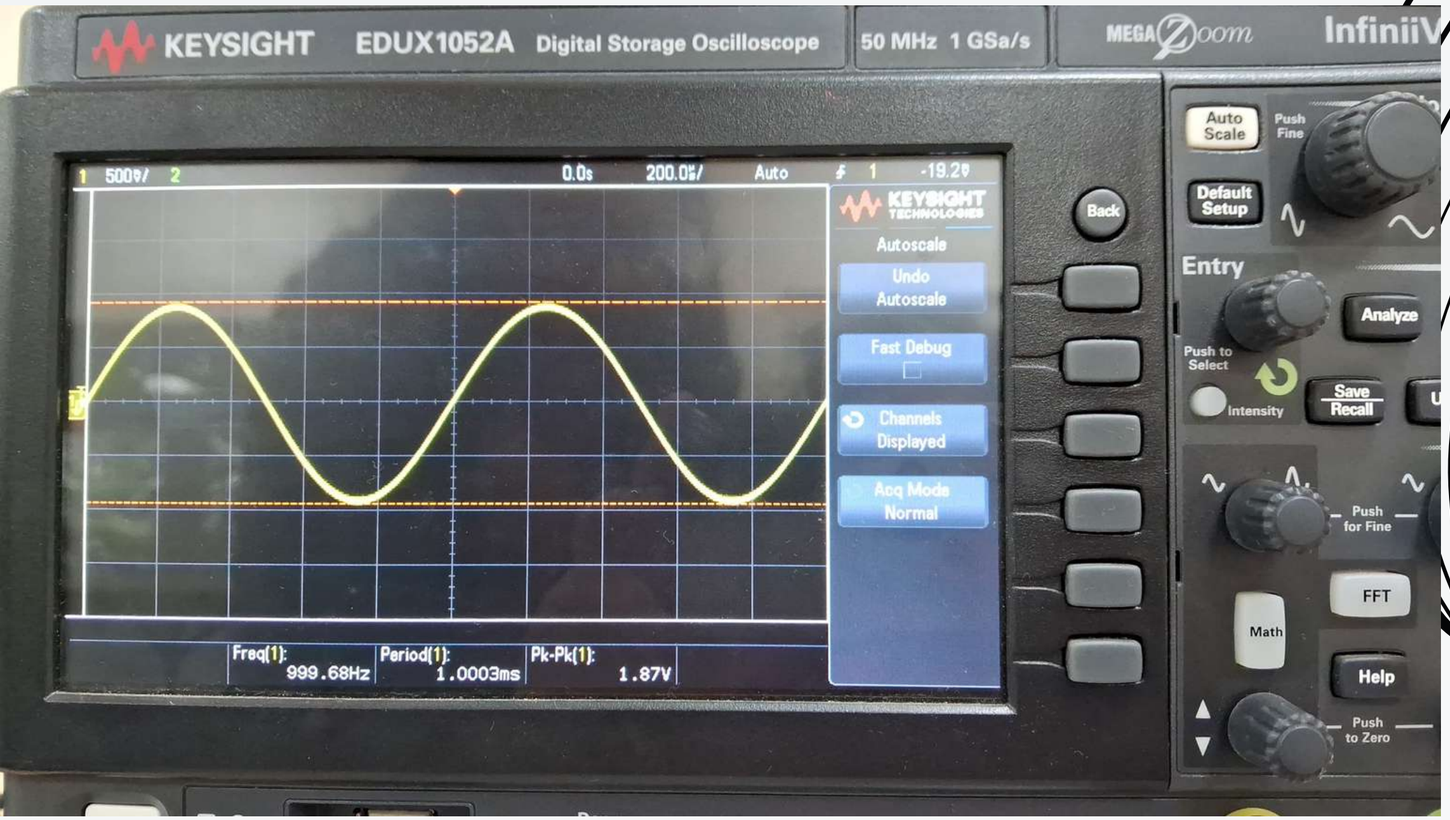

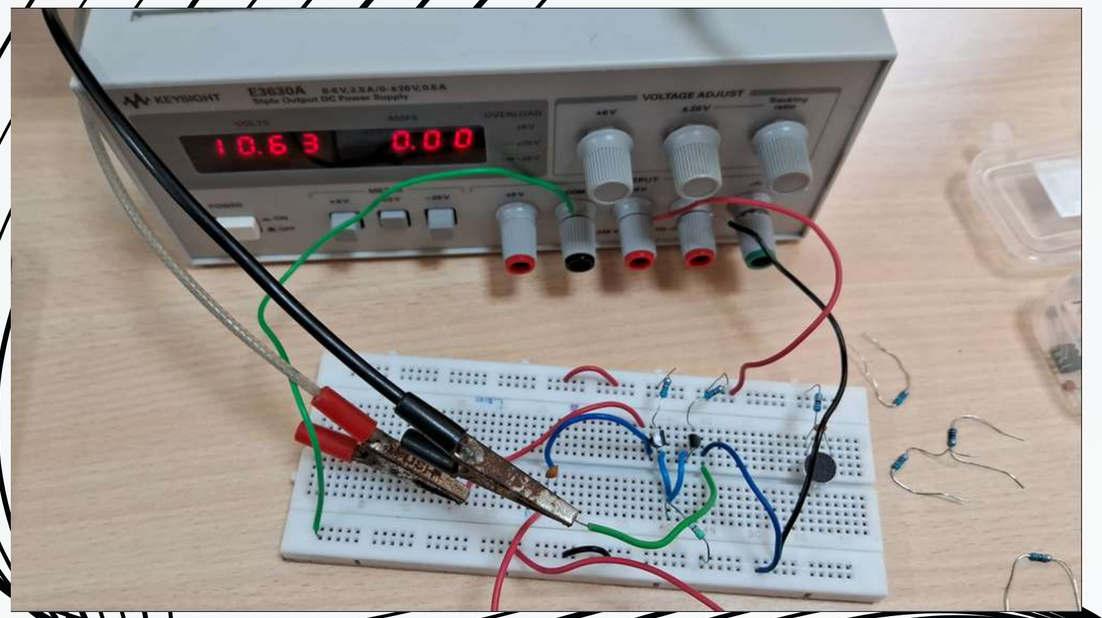

CS Amplifier

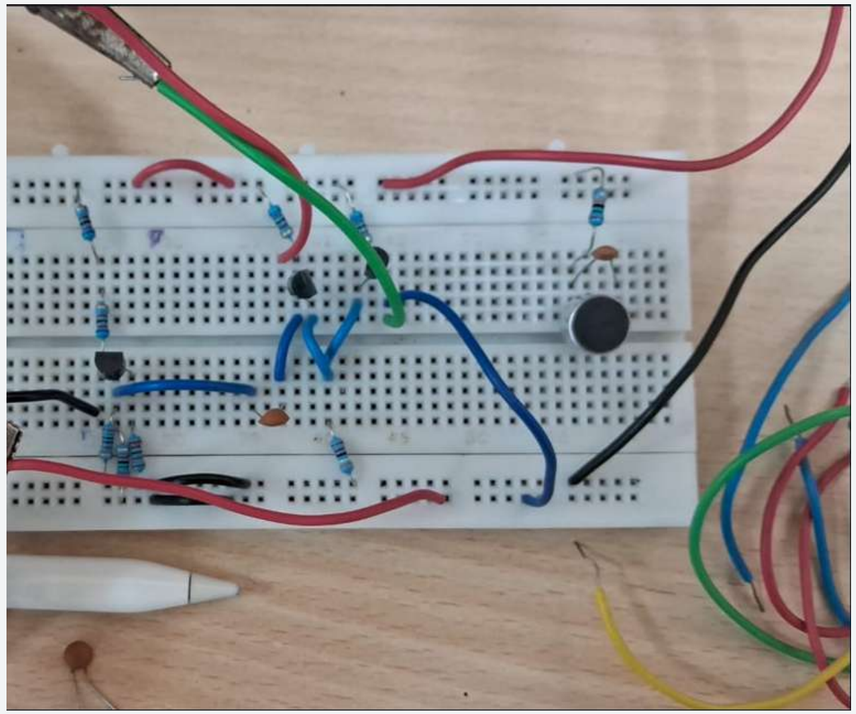

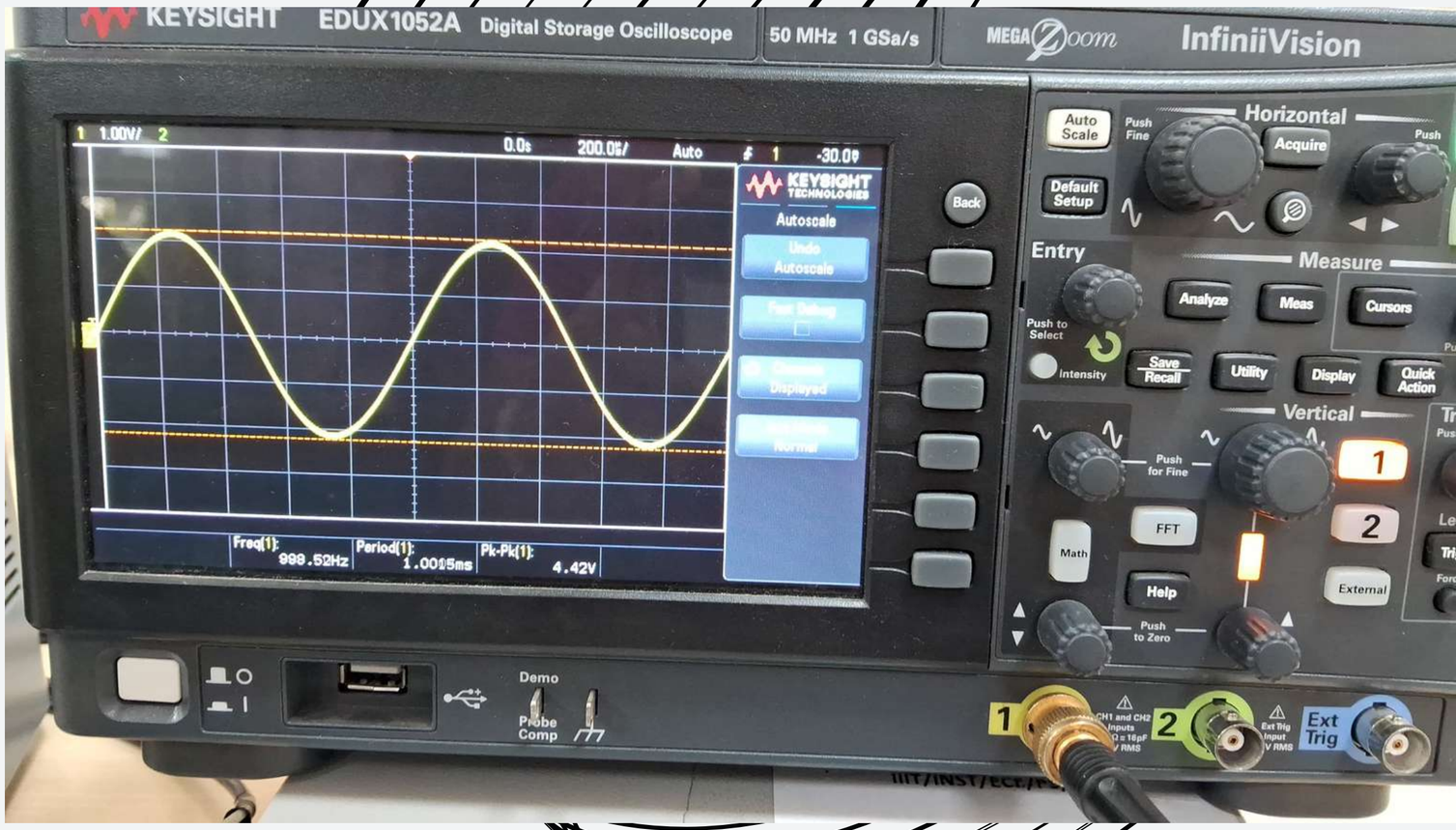

Circuit with buffer

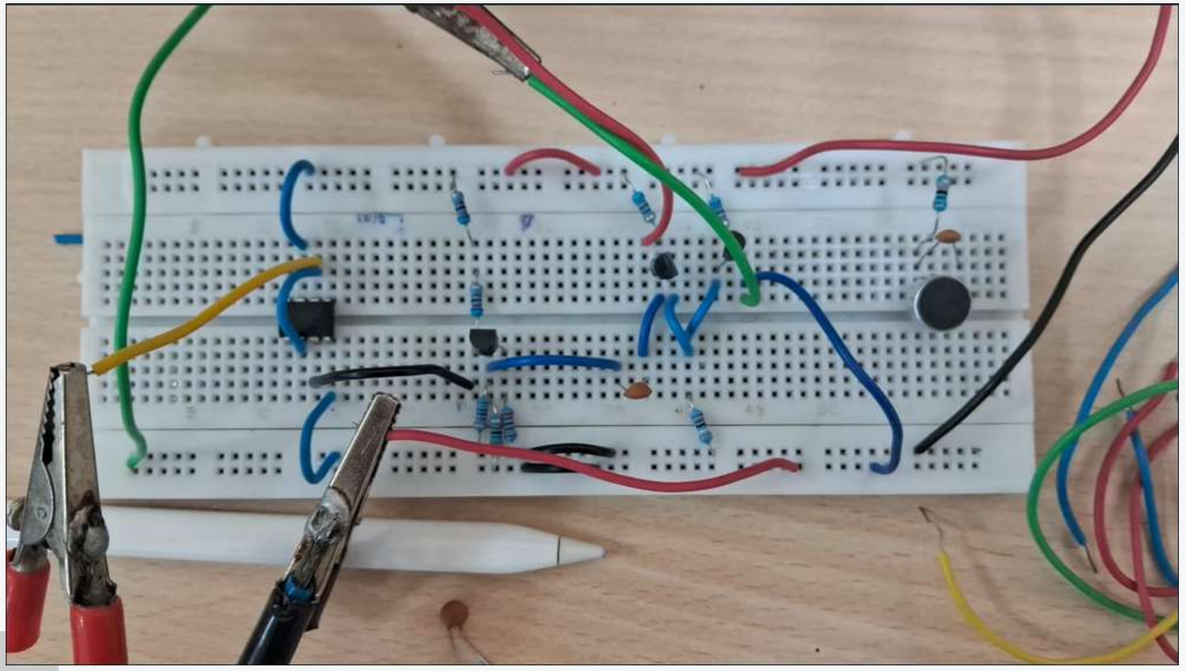

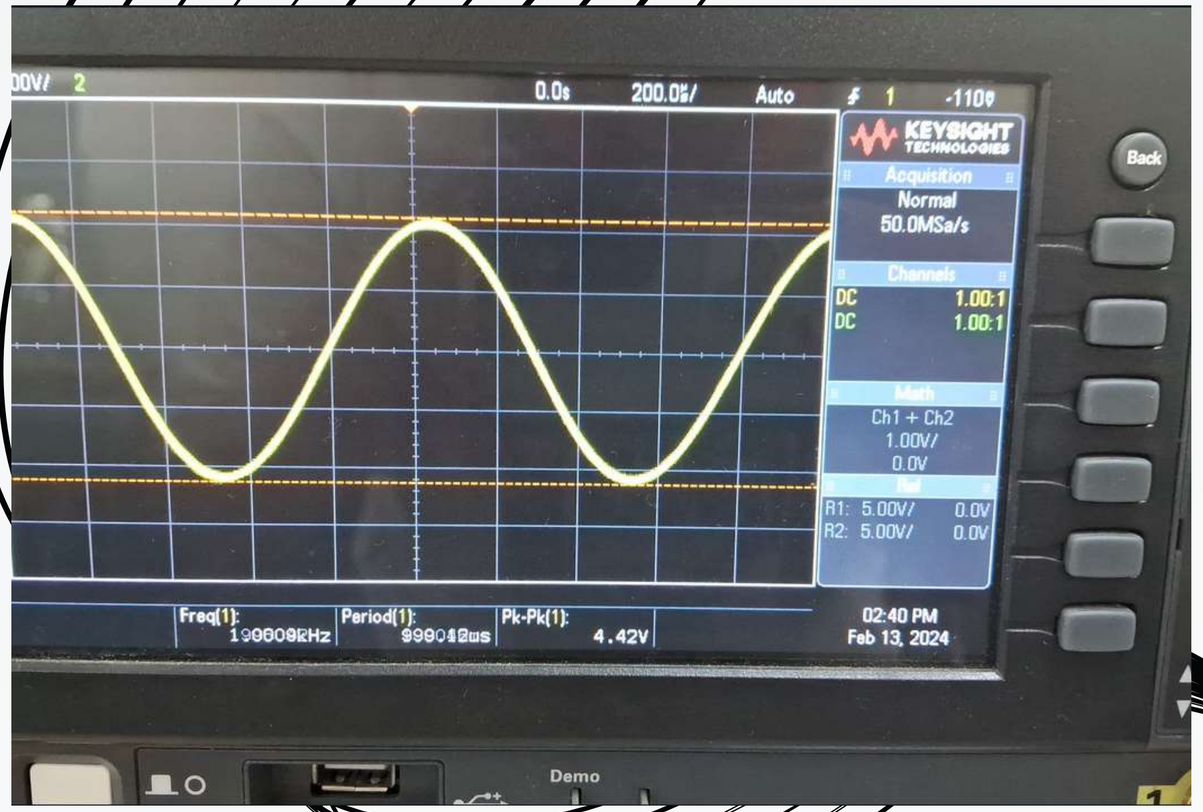

Filter stage

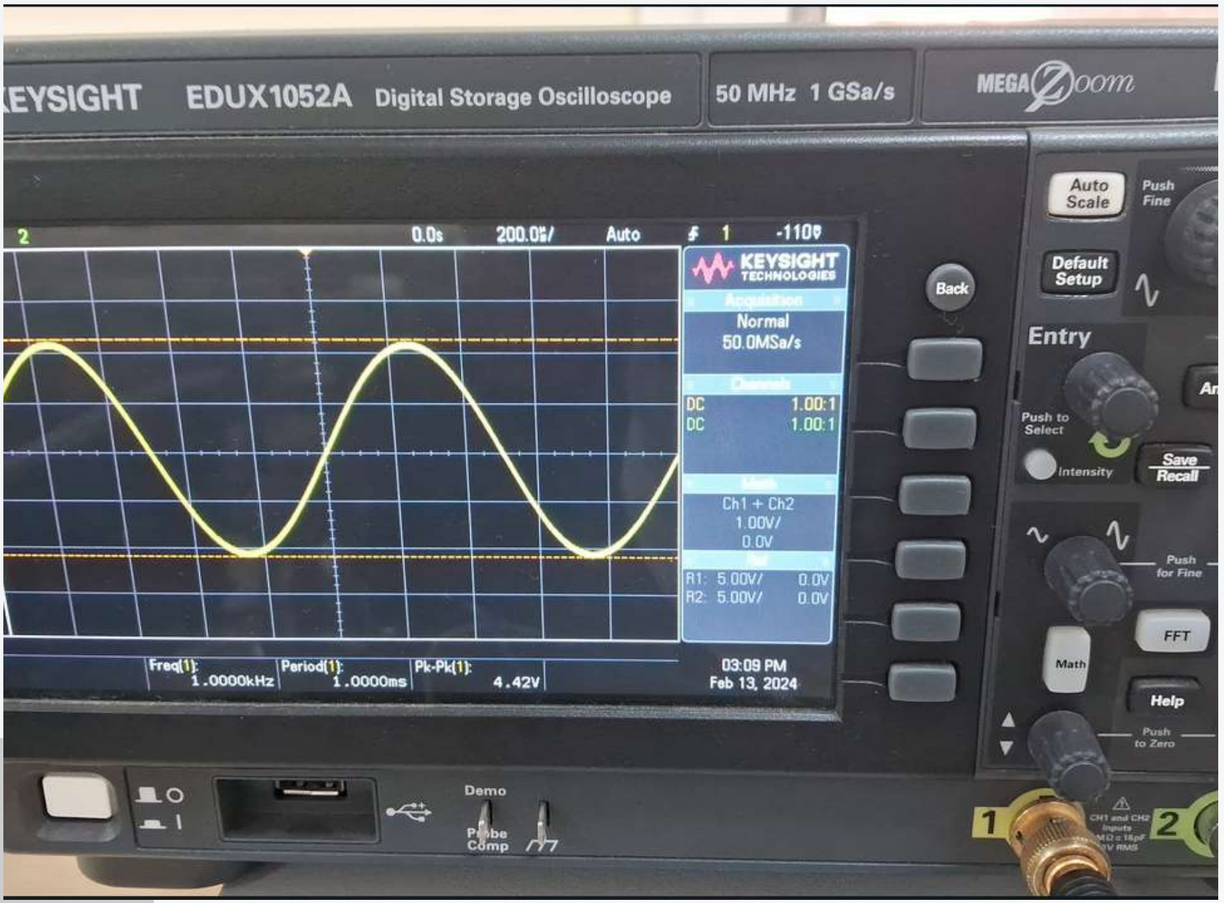

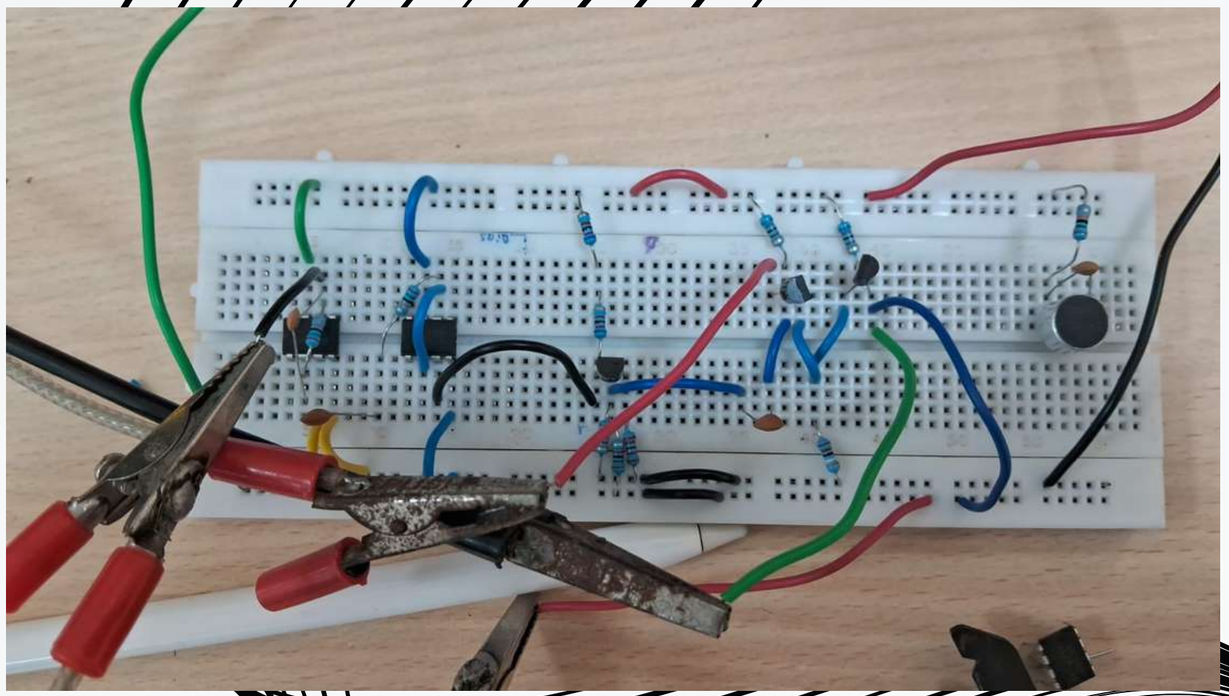

Frequency Analysis of filter ckt

Low-pass cutoff

High-pass cutoff

Power amplifier

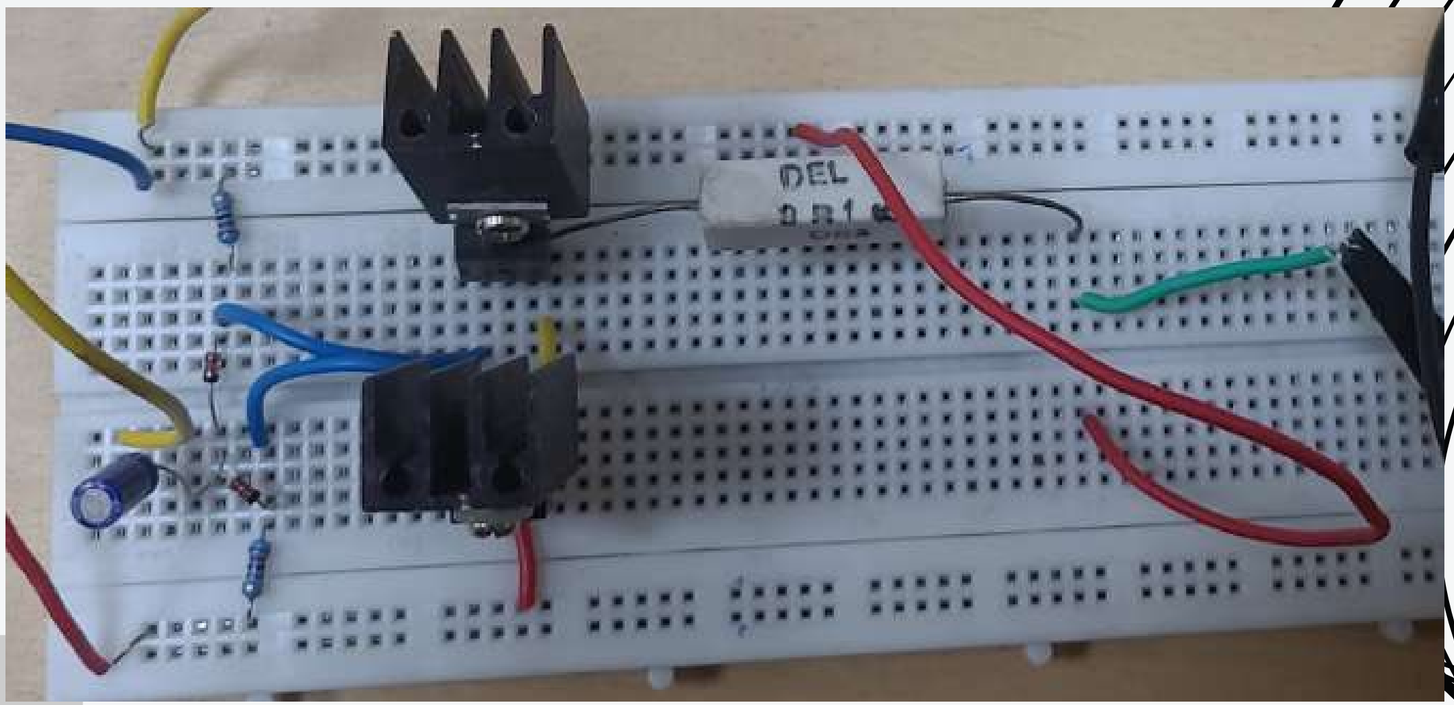

Final Circuit

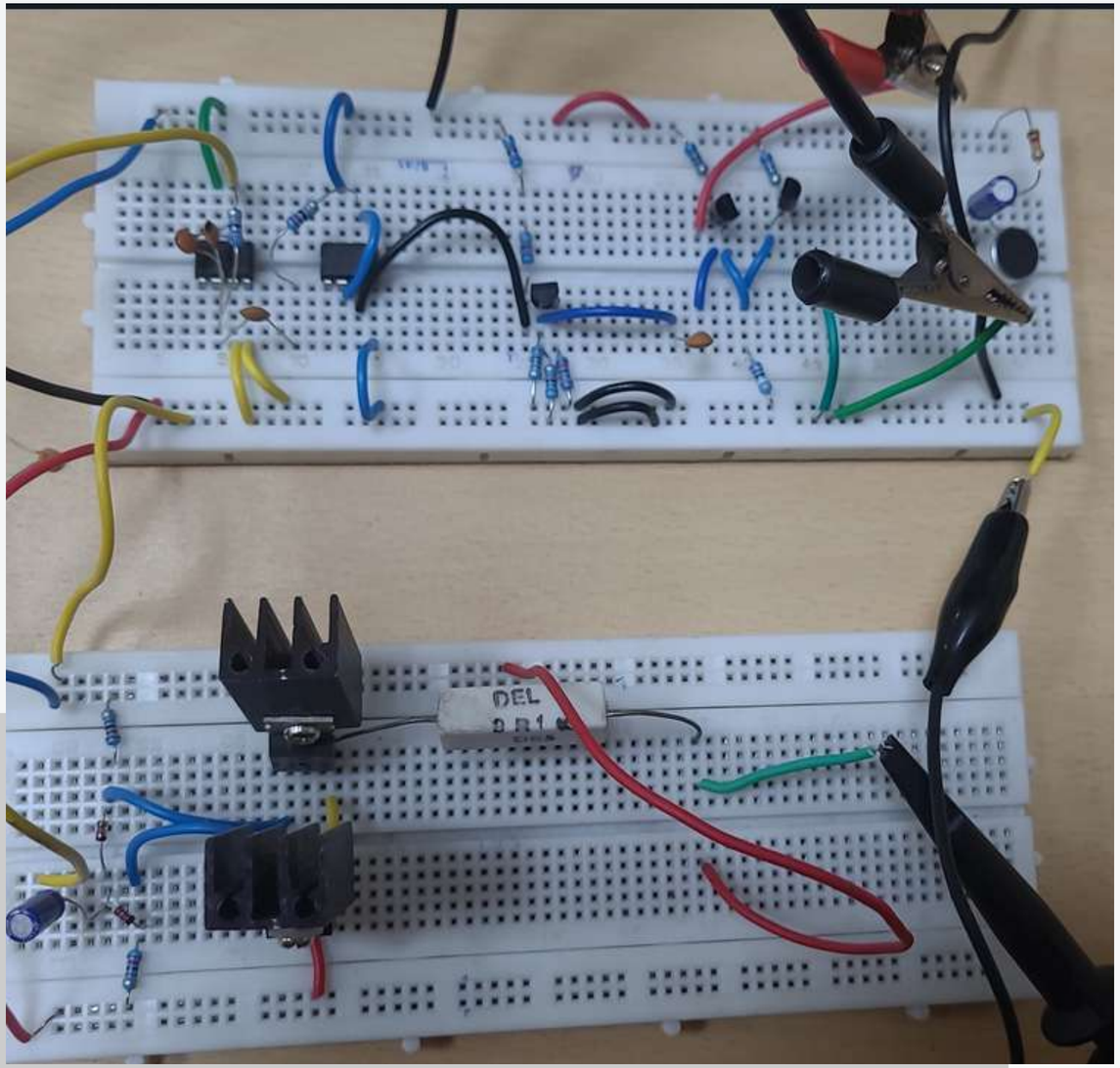

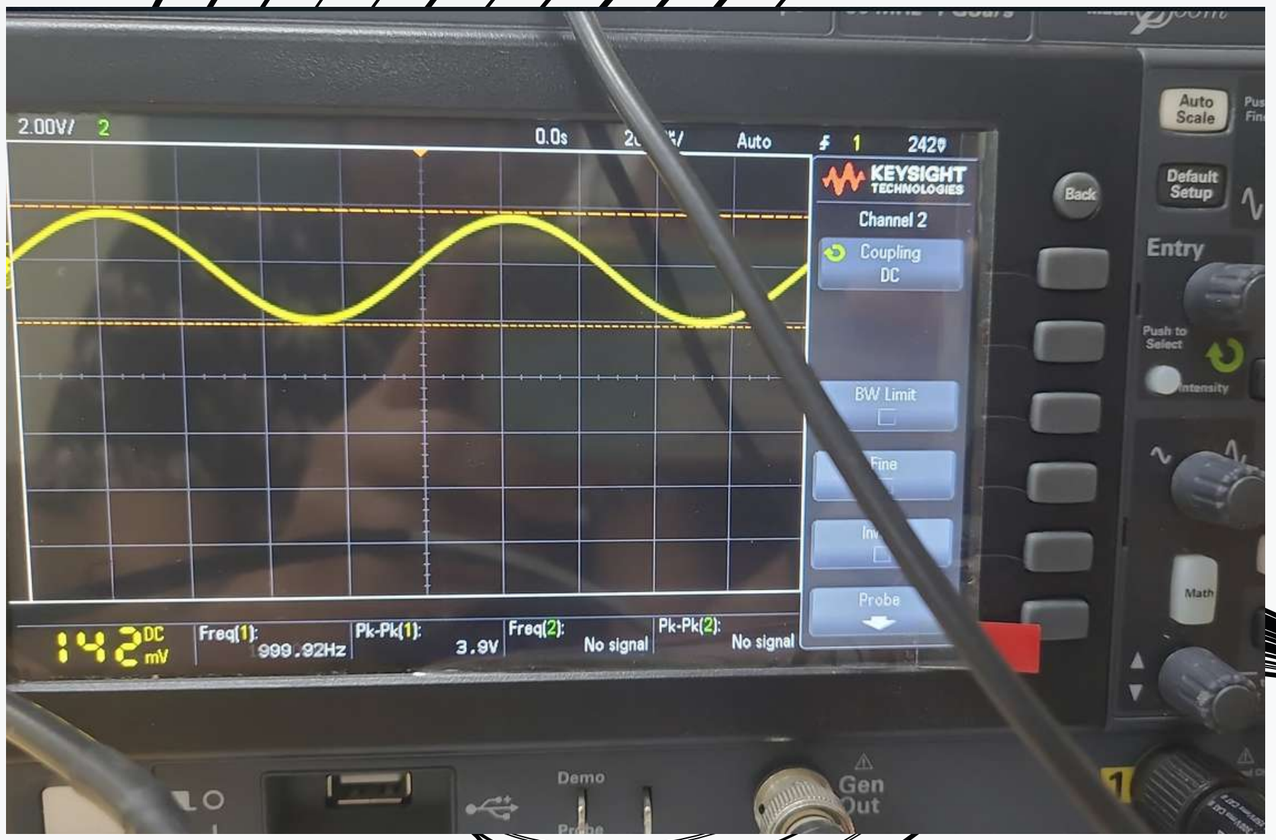

OBSERVATIONS AND INFERENCE

Observations

Components	Calculated Input	Calculated Output	Simulation Input	Simulation Output	Hardware Input	Hardware Output
Diff Amp Stage	20 mVpp	2.98 Vpp	20 mVpp	2.6 Vpp	20 mVpp	1.87Vpp
CS Amplifier	2.98 Vpp	5.6 Vpp	2.6 Vpp	7 Vpp	1.87 Vpp	4.2 Vpp
Filter Stage	5.6 Vpp	5.6 Vpp	7 Vpp	7 Vpp	4.2 Vpp	4.2Vpp
Power Amplfier	5.6 Vpp	~	7 Vpp	3 Vpp	4.2 Vpp	3.9Vpp

Observations

The filter stage frequency cutoffs are the following:

Lowpass filter cutoff = ~7 Hz
High pass filter cutoff = ~36 kHz

Inference/Learnings

- We see how our calculated, simulated and hardware outputs change due to variations within components and other external noise.
- Our circuit successfully played music, while cutting off a significant portion of our noise.
- One drawback of our circuit was that our power output was too high, which led to overheating.
- We learnt how to take calculated guesses and debug a circuit.