Digitally Controlled Minimum-On-Time Burst Mode Switching for Buck Converter for Low Power Application for IOT Sensor Node

Aditya Raj
IIIT Naya Raipur
Chhattisgarh, India
aditya22101@iiitnr.edu.in

Trisul
IIIT Naya Raipur
Chhattisgarh, India
trisul22101@iiitnr.edu.in

Vijay Gupta
IIIT Naya Raipur
Chhattisgarh, India
vijayg@iiitnr.edu.in

Bipin Chandra Mandi
IIIT Naya Raipur
Chhattisgarh, India
bipin@iiitnr.edu.in

***Abstract*—This paper presents a control scheme for a buck converter to power IoT sensor nodes under light-to-ultralight loads using minimum-on-time (Min-T_{on}) burst-mode switching. Conventional burst mode typically limits only the maximum burst length while leaving the switch pulse width unconstrained; as a result, the inductor energy per pulse can be insufficient to charge the output capacitor to its target voltage between bursts, undermining tight voltage regulation at very low load currents. The proposed digitally implemented controller explicitly enforces a per-pulse minimum on-time within each burst, and coordinates burst initiation with the output-voltage hysteresis, ensuring guaranteed capacitor charging and stable regulation with low switching loss. The controller design, small-signal modeling, and stability across varying loads are derived analytically and validated in MATLAB/Simulink. A 10W, 3.3V buck converter simulation circuit operating over a 10–100 mA ultralight load range demonstrates robust stability, reduced output ripple, and improved regulation compared to conventional burst-mode control. The digital control design was performed with Verilog HDL.**

***Index Terms*—Burst mode switching, SIDO buck converter, Digital control, FPGA implementation, IoT sensor nodes, Light Load**

I. Introduction

Powering the IoT sensor node with a regulated voltage is ensured by a DC-DC converter. Many of the sensor nodes remain in standby mode, limiting power consumption across the different units/peripherals [1]–[3]. In low-power consumption scenarios, the load current is restricted to low-to-ultra-light levels. Pulse-width modulation (PWM), commonly used at higher load currents, leads to increased switching losses and is therefore inefficient at light load. [4], [5].

Various schemes such as pulse frequency modulation [6] and pulse skipping modulation [7]–[9] were explored by many researchers. However, burst mode schemes were also explored by researchers [10]–[16], due to their ability to maintain the regulated output voltage within fixed upper and lower limits. During burst ON-time, the converter operates at the optimal power level P_{opt} to charge the output capacitor. During burst OFF-time, the converter does not work and relies on the output capacitor to maintain the output voltage [16]. The authors in [10] presented the burst-mode converter for efficiency optimization. The designed scheme was tested with a photovoltaic cell as the source. However, the capacitor size has a higher value. The authors in ref. [11] have proposed the burst scheme that supports fast transient response with power-saving features. The controller used the slew rate detection logic and had the complex controlling scheme. The authors in ref. [12] presented the burst and continuous modes for low-power energy sources for the boost converter, having limited the peak efficiency under lower power throughput and used the larger capacitor (super capacitor) on the load side. The authors in ref. [13] used the constant-on time burst mode scheme for the photovoltaic sourced converter and are designed in 180-nm CMOS technology.

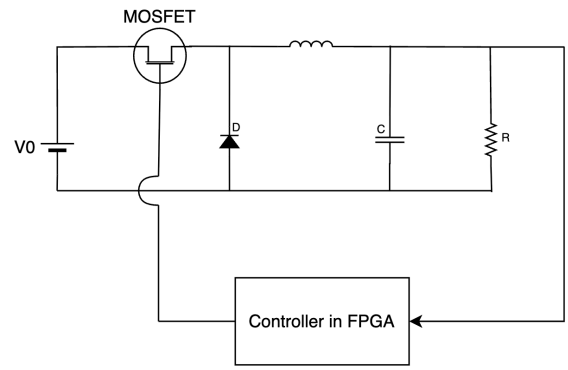

Fig. 1. SISO buck converter with FPGA-based minimum-on-time burst-mode controller.

Similarly, the authors in reference [15] analyzed the ESR of the output capacitor on the performance of a constant on-time (COT)-controlled buck converter and the phenomenon of pulse bursting. Effect of equivalent series resistance. The Paper [14] presented the current controlled scheme with the burst mode to overcome the issue of hysteresis burst mode control. the authors also analyzed the frequency spectrum of parabolic voltage control and efficiency to ensure audio susceptible and efficient power conversion. This paper presents the minimum-on-time controlled burst mode schemed designed for a digi-

tally controlled single-input, single-output buck converter.

II. Proposed Framework for the Burst-Mode Controller in the SISO Converter

Fig. 1 illustrates a digitally controlled DC–DC buck converter operating in burst mode with a guaranteed minimum on-time. The discrete-time error signal $v_e[n]$ is computed at the PWM clock frequency F_s by comparing the sampled output voltage $v_o[n]$ with the reference $v_{\text{ref}}[n]$. This error is processed by a hysteretic decision block with an upper threshold v_{Hth} and a lower threshold v_{Lth}.

In the conventional burst-mode scheme of Fig. 2a, the power MOSFET is enabled and disabled according to this hysteresis window: switching occurs while the output traverses between v_{Lth} and v_{Hth}, and is otherwise suspended, producing bursts of switching activity separated by idle intervals. The enhanced scheme in Fig. 2b adds a minimum on-time constraint. When v_o falls to v_{Lth}, the controller generates one switching pulse of duration $t_{\min}$ in every PWM period T_s. These pulses supported by $t_{\min}$ continue each period until v_o reaches v_{Hth}, at which point pulse generation is stopped (i.e., the controller idles) until the output again decays to v_{Lth}. This approach preserves burst-mode behavior while ensuring at least one controlled energy delivery per T_s whenever the output is below the upper threshold.

Referring to Fig. 3 when $v_e[n] \geq v_{Hth}$, a burst-enabled latch enables the DPWM to issue a packet of pulses of minimum-on-time to the gate driver. Each pulse width is limited to $T_{on,\min}$ by a digital one-shot timer, while a programmable hold-off $T_{off,\min}$ ensures adequate inductor current decay and prevents chattering. During the burst, the controller samples $v_o[n]$ once per switching period at F_s and keeps issuing pulses until$v_e[n] \leq v_{Lth}$ or a safety limit $M_{\max}$ on the number of consecutive pulses is reached. This packetized operation produces three operating states—Idle, Burst, and Blanking—concentrating switching activity only when the output requires replenishment and reducing gate-drive and control losses at light load.

The burst packet size is chosen from a first-order charge-balance phenomenon. In discontinuous conduction, one minimum-on pulse produces a peak inductor current

$$I_{\text{pk}} \approx \frac{V_{\text{in}} - V_o}{L} T_{on,\min}, \tag{1}$$

and naturally decays to zero in

$$T_{off,0} = \frac{V_{\text{in}} - V_o}{V_o} T_{on,\min}. \tag{2}$$

The charge delivered per pulse is approximated by

$$Q_p \approx \tfrac{1}{2} I_{\text{pk}}(T_{on,\min} + T_{off,0}) = \frac{V_{\text{in}}(V_{\text{in}} - V_o)}{2\,L\,V_o} T_{on,\min}^2, \tag{3}$$

The controller implements a digital accumulator that compensates the capacitor decrease over the hysteresis band:

$$\text{packet}_{k+1} = \text{packet}_k - \big(Q_p - I_{\text{load}}\,T_s\big), \qquad T_s = \frac{1}{F_s}. \tag{4}$$

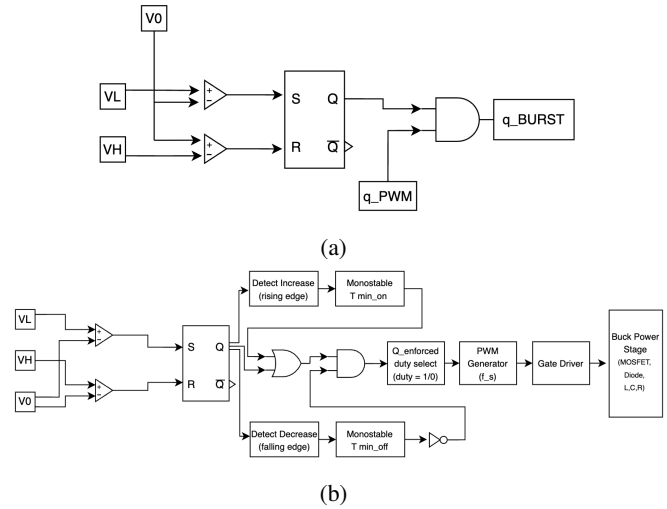

Fig. 2. Block diagram of controlling scheme under (a) conventional burst mode, and (b) proposed minimum on-time burst mode for DC-DC converter.

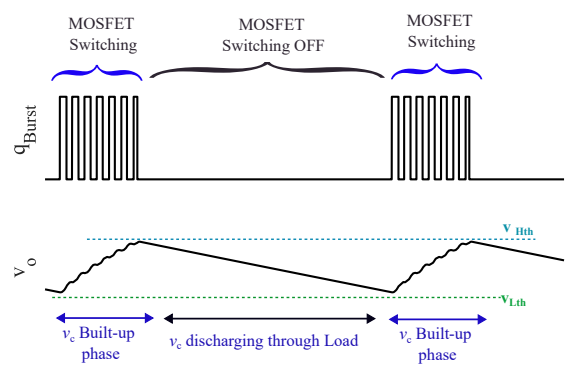

Fig. 3. The waveform of the switching pulse q_{Burst} and output voltage v_o under proposed scheme shown in Fig. 2(b). The switching pulse causes charging of output capacitor C till $v_c = v_{Hth}$ during v_c built-up phase. during MOSFET switching OFF, when the v_c discharges through the load till $v_c = v_{Lth}$.

A. Mathematical Modeling and Governing Equations

We model a single-input single-output buck stage under ideal CCM assumptions. Let V_{in} be the source, $v_o(t)$ the output across load R, $i_L(t)$ the inductor current, and L, C the passive values. With duty $d(t) \in [0,1]$ and PWM period $T_s = 1/f_{\text{PWM}}$, the averaged dynamics are

$$\frac{di_L}{dt} = \frac{1}{L}\big(d\,V_{in} - v_o\big), \qquad \frac{dv_o}{dt} = \frac{1}{C}\Big(i_L - \frac{v_o}{R}\Big). \tag{5}$$

Window hysteresis (burst enable).: A set–reset rule around V_{ref} decides if switching is permitted; updates occur only at $t = kT_s$:

$$y[k] = \begin{cases} 0, & v_o[k] \geq V_{Hth}, \\ 1, & v_o[k] \leq V_{Lth}, \\ y[k-1], & \text{else}, \end{cases} \qquad y[k] \in \{0,1\}. \tag{6}$$

The continuous control applied to the power stage is the gated PWM

$$p(t) = r(t)\, y[k]. \tag{7}$$

B. Operational Scenario in Light-Load Condition

At light-to-ultralight load (R large), the converter coasts between bursts and the output capacitor carries the load. During the burst-OFF interval the voltage decays approximately as

$$\frac{dv_o}{dt} \approx -\frac{v_o}{RC} \quad \Rightarrow \quad t_{\text{off}} = RC\, \ln\Big(\frac{V_{\text{th}}}{V_{\text{Lth}}}\Big), \tag{8}$$

linking the chosen ripple window directly to the OFF duration for a given (R, C). When v_o crosses V_{Lth}, the latch asserts (y=1) and the converter switches for three frames (ON packet). Over one packet of length $T_b = N\, T_s$, the effective averaged duty is

$$d_{\text{eff}} = \alpha\, \bar{d} = \tfrac{3}{7}\, \bar{d}, \qquad \bar{v}_o \approx d_{\text{eff}}\, V_{\text{in}}, \tag{9}$$

yielding a simple feasibility check $\bar{d} \approx V_{\text{ref}}/(\alpha V_{\text{in}}) \leq 1$. With f_{PWM} fixed, the usual CCM ripple estimates guide component intuition:

$$\Delta i_L = \frac{(V_{\text{in}} - \bar{v}_o)\, \bar{d}}{L\, f_{\text{PWM}}}, \qquad \Delta v_o \approx \frac{\Delta i_L}{8\, C\, f_{\text{PWM}}}. \tag{10}$$

C. Digital Control Design on FPGA

The above-discussed proposed scheme is implemented in Verilog HDL to build a digital controller on an FPGA. The RTL follows the modeling flow: sample once per PWM frame, compute a bounded duty, update the hysteresis latch at the frame boundary, and drive a clean PWM to the power stage. This frame-synchronous discipline maintains deterministic timing and faithful waveforms to the equations.

1) Module and Timing (Verilog):

- **Top module:** *buck_siso_ctrl_hyst_burst*.
  Inputs: *clk*, *reset*, *adc_in[11:0]*.
  Outputs: *pwm_output*, *burst_enable*, *burst_output*, *final_output*.
- **Single clock domain:** all state (ADC sample, duty, latch) updates only when the PWM counter reset (*pwm_cnt* = 0).

2) Burst Enable (Window Hysteresis with Minimum-On Time Logic):

- Compare the sampled code to thresholds (V_L, V_H); update a 1-bit latch *burst_en* only at the frame boundary (set, reset, or hold).
- Drive the stage with *pwm_output* = *pwm_raw* $\wedge$ *burst_en*; also expose *burst_enable* for clear timing in the viewer.

3) Effect of Conversion Delay: Sampling, computation, and zero-order hold introduce a group delay T_d on the order of one frame ($T_d \approx T_s$). The minimum-on-time modulator remains stable if crossover is kept comfortably below the PWM rate. A practical bound is

$$\omega_c T_s \lesssim 0.25 \quad \Longrightarrow \quad f_c \lesssim 0.04\, f_{\text{PWM}}, \tag{11}$$

which limits the phase lag $\phi_{\text{delay}} \approx \omega_c T_d$ and preserves a clean, repeatable pulse-skipping pattern in the waveforms.

4) Effect of Capacitor on Ripple Voltage: With a legal pulse of width $t_{\min}$, the inductor current step is $\Delta i_{L,\min}$ (used in). The pulse injects charge $\Delta Q \approx \frac{1}{2}\Delta i_{L,\min} t_{\min}$, giving the pulse-induced ripple

$$\Delta v_{\text{pulse}} \approx \frac{\Delta i_{L,\min} t_{\min}}{2C}.$$

Between pulses, the load draws charge and adds the coasting droop

$$\Delta v_{\text{off}} \approx \frac{I_L\, T_{\text{gap}}}{C},$$

with T_{gap} predicted by the pulse-rate model. If the output capacitor has ESR r_{ESR}, add the step component

$$\Delta v_{\text{ESR}} \approx \Delta i_{L,\min}\, r_{\text{ESR}}. \tag{12}$$

5) Effect of Load Current: Under the accumulator law, the expected pulse rate is

$$R_{\text{pulses}} \approx \frac{\alpha}{T_s}\, \frac{\overline{d_{\text{req}}}}{d_{\min}},$$

with α the enabled-frame fraction (e.g. $3/7$) and $\overline{d_{\text{req}}}$ the average duty request at light load ($I_L = v_o/R$). Define the normalized request

$$\lambda \;=\; \frac{\overline{d_{\text{req}}}}{d_{\min}}. \tag{13}$$

If $\lambda < 1$, some ON frames carry no pulse (visible pulse skipping); if $\lambda \geq 1$, every ON frame carries a legal pulse, and the modulator behaves like a conventional burst controller. Thus, increasing the load current (smaller R) increases $\overline{d_{\text{req}}}$, increasing the pulse rate analyzed by the packets until the "every-ON-frame" regime is reached.

6) Effect of Inductor Value: For a fixed $t_{\min}$, the minimum-pulse current step is

$$\Delta i_{L,\min} = \frac{(V_{in} - \bar{v}_o)\, t_{\min}}{L},$$

so, a larger L reduces $\Delta i_{L,\min}$, reduces Δv_{pulse}, and softens the steps related to ESR. A compact sizing from a desired current step $\Delta i_{L,\text{spec}}$ is

$$L \;\gtrsim\; \frac{(V_{in} - \bar{v}_o)\, t_{\min}}{\Delta i_{L,\text{spec}}}, \tag{14}$$

which keeps single-pulse perturbations small while maintaining adequate transient slew. This behavior results in shallower inductor current ramps and smoother output voltage v_0 as the inductance increases, at the cost of a slower dynamic response, illustrating the inherent efficiency–regulation trade-off.

D. FPGA Realization

One register is used for $a[k]$, one comparator for $u[k]$, and a counter mask is employed to enforce a pulse of $n_{\min}$ ticks when $u[k] = 1$. All logic updates occur at $t = kT_s$, and no gated or multi-clock domains are introduced. The key control signals pwm_output, burst_enable, burst_output, and final_output remain unchanged. Fig. 4 shows the timing diagram of the proposed digital minimum-on-time burst controller implemented in HDL.

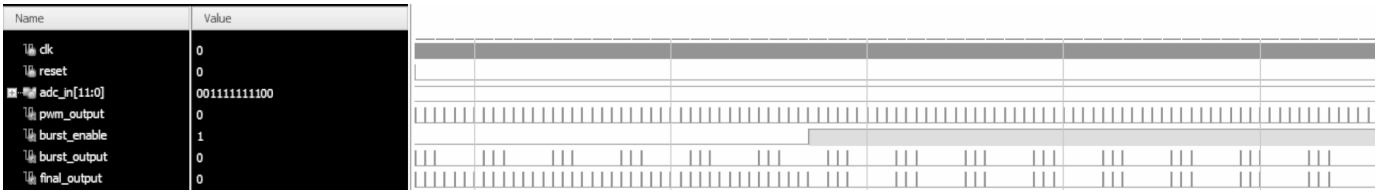

Fig. 4. Timing diagram of the burst mode output q_{Burst} designed using Verilog HDL. The sequence first provides the gate pulse $q = q_{\text{PWM}}$ when *Burst_En* = 0. When *Burst_En* = 1, the output becomes $q = q_{\text{Burst}}$. The signal adc_in represents the instantaneous scaled value used for simulation.

III. Results and Analysis

The evaluation of a single-input, single-output buck stage with an input voltage $v_{in} = 9V$ and a regulated output voltage $v_o = 5.0V$ with a ripple of $\Delta v = 10mV$. The switching frequency $F_s = 200kHz$. The burst operation is governed by a simple voltage window; the switch is enabled when the output drops below $v_{Lth} = 4.95V$ and disabled when it rises above $v_{Hth} = 5.05V$. To prevent pulses that are too short, the controller enforces a minimum on-time $T_{on-min} = 1\mu s$. To apply external load, the load current steps between $200mA$ and $100mA$. The results are taken directly from the Verilog test-bench and the corresponding MATLAB/Simulink model.

A. Load transient with burst mode.

Fig. 5 shows the output voltage (v_o), the switching pulse q_{Burst} with respect to the change in the load current i_o from $50mA$ to $100mA$. In the load-step figure (200 mA down to 100 mA over 100 ms), the burst-mode command arranges packets, with switching grouped into packets and some quiet time between them. During each packet, the output voltage rises as the inductor returns energy to the capacitor, then drops between packets as the load draws current. After the current step down, packets occur less often and with greater time between packets, yet the output stays in the bounds of 4.95–$5.05V$, with the ripple of $\Delta v_o = 10mV$. The plot shows the desired operation: stable regulation with fewer switching events as the load decreases.

B. Effect of Output Capacitance

Fig. 6 shows the expected trade-off in the sweep of the capacitor. A higher capacitance value ($C = 100$–$200\mu F$) results in a higher charge-holding capacity and a gentler downward slope between the energy packets. In contrast, smaller capacitance values produce a more chaotic output voltage waveform and can lead to bifurcations. Understanding the relationship between voltage behavior and capacitance is essential for proper capacitor selection, especially since the ripple is programmed to remain constant.

C. Comparison with Existing Light-Load Control Strategies

A qualitative feature-based comparison in Table I summarizes the existing light-load controller approaches and the proposed solution. Although both burst and ripple control techniques do not enforce a minimum energy delivery per switching pulse, the Min-T_{on} controller guaranties sufficient

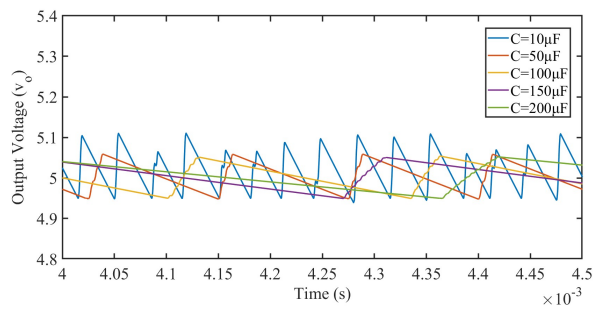

Fig. 5. waveform of output voltage at different capacitor value in buck converter. The output voltage at lower capacitor value (for example 10 μF) leads to chaotic output voltage waveform.

energy transfer in the inductor for every burst event. The simulated performance results are summarized in Table II, which demonstrates the effectiveness of the proposed controller. The proposed controller provides good voltage regulation $4.95 - 5.05V$ with minimal output ripple and reduced switching activity under light loading conditions. Hence, using minimum on-time requirements enhances the stability of the regulation and provides for a more predictable energy transfer compared to conventional burst operation modes of control.

IV. Conclusion

This paper presented a digitally controlled SISO buck converter employing a minimum-on-time burst-mode strategy for stable operation under light-load conditions. The proposed controller uses voltage hysteresis and minimum on-time enforcement to ensure sufficient energy delivery per switching pulse, resulting in tight voltage regulation and reduced switching activity. The simulation results obtained from the implementation based on MATLAB/Simulink and

TABLE I. Burst mode characteristics for different capacitor values and load currents.

Capacitor Value	Burst Pulses	Load Current (mA)	Burst Duration (μs)	MOSFET Off Duration (μs)
50μF	3	33	15.28	110.87
100μF	6	33	27.55	208.60
150μF	9	33	40.73	304.27
200μF	12	33	53.11	409.00
50μF	3	16.5	13.41	225.15
100μF	6	16.5	25.52	404.48
150μF	8	16.5	38.13	624.07
200μF	11	16.5	50.17	804.73

TABLE II. Comparison of the proposed digital minimum-on-time burst controller with recent buck converter control strategies.

Major Parameter	Vladu et.2023 VCM-Burst [17]	Cheng et al., 2023 RBCOT [18]	This Work
Control Strategy	Digital dual-mode control (VCM + burst)	Ripple-based constant on-time control (quasi-V2)	Digital minimum-on-time burst mode
Input Voltage Range	6–28 V	3.3 V	9 V (fixed test condition)
Output Voltage	3.3 V	0.9–1.8 V	5 V
Load Current Range	5 mA–2 A	0.1–1 A	10–100 mA (ultra-light IoT)
Switching Frequency	200 kHz	1 MHz	200 kHz
Load Step Tested	2 A $\rightarrow$ 0.05 A	0.1 A $\rightarrow$ 1 A	200 mA $\rightarrow$ 100 mA
Overshoot / Undershoot	110 mV overshoot	78 mV undershoot and 126 mV overshoot	Not dominant (tight hysteresis $\pm$50 mV)
Light-Load Optimization	ZCD-based discontinuous conduction detection	Current ramp compensation using transconductance sensing	Enforced minimum pulse energy ($T_{\text{on,min}} = 1\ \mu$s)
Stability Contribution	Automatic mode transition using ZCD	Ramp compensation prevents subharmonic oscillation	Charge-balance modeling with minimum pulse enforcement

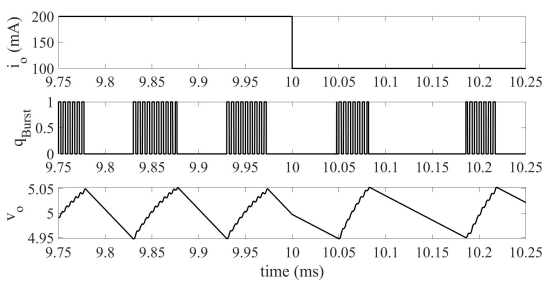

Fig. 6. Waveform of the output voltage with respect to change in load current from 50mA to 100 mA.

Verilog confirm stable burst operation, low output ripple, and reliable regulation under varying load conditions.

The presented design demonstrates an effective and practical digital control approach for light-load power management. Future work will focus on extending the control strategy to additional converter topologies, incorporating advanced closed-loop control schemes, and validating performance through hardware implementation.

REFERENCES

[1] A. Richelli, M. Salem, and L. Colalongo, "A review of fully integrated and embedded power converters for iot," *Energies*, vol. 14, no. 17, p. 5419, 2021.

[2] S. Song, A. Novello, and T. Jang, "Challenges and innovations in fully integrated dc-dc converters for iot and modern computing platforms," in *2024 IEEE Custom Integrated Circuits Conference (CICC)*. IEEE, 2024, pp. 1–8.

[3] A. Kumar, V. K. Gupta, and B. C. Mandi, "Improved voltage regulation in si-sido dc-dc converter through controller tuning in light load conditions," in *2024 4th International Conference on Emerging Frontiers in Electrical and Electronic Technologies (ICEFEET)*. IEEE, 2024, pp. 1–6.

[4] V. Nerubatskyi, O. Plakhtii, and D. Hordiienko, "Efficiency analysis of dc-dc converter with pulse-width and pulse-frequency modulation," in *2022 IEEE 41st International Conference on Electronics and Nanotechnology (ELNANO)*, 2022, pp. 571–575.

[5] Y. Chen, Y. Zeng, J. Yang, and Y. Lin, "Pt controlled pccm buck converter with adaptive pulse train generator and nmos current sensor," *AEU-International Journal of Electronics and Communications*, vol. 158, p. 154443, 2023.

[6] J.-S. Kim, J.-O. Yoon, and B.-D. Choi, "A high-light-load-efficiency low-ripple-voltage pfm buck converter for iot applications," *IEEE Transactions on Power Electronics*, vol. 37, no. 5, pp. 5763–5772, 2022.

[7] V. Kumar Gupta and B. Chandra Mandi, "High-frequency digitally adaptive pulse skipping modulated voltage-mode controlled quadratic buck converter," *International Journal of Circuit Theory and Applications*, vol. 53, no. 5, pp. 2541–2555, 2025.

[8] S. Kapat, B. C. Mandi, and A. Patra, "Voltage-mode digital pulse skipping control of a dc–dc converter with stable periodic behavior and improved light-load efficiency," *IEEE Transactions on Power Electronics*, vol. 31, no. 4, pp. 3372–3379, 2015.

[9] B. C. Mandi, S. Kapat, and A. Patra, "Fractional pulse skipping in digitally controlled dc-dc converters for improved light-load efficiency and power spectrum," in *2016 IEEE Applied Power Electronics Conference and Exposition (APEC)*. IEEE, 2016, pp. 2504–2510.

[10] F. Reverter, C. Glaser, and M. Gasulla, "Efficiency optimization in burst-mode buck dc/dc converters for sensor nodes," *IEEE Sensors Journal*, vol. 18, no. 17, pp. 7141–7149, 2018.

[11] J.-H. Lin, S.-H. Yang, B. Muniandi, Y.-S. Ma, C.-M. Huang, K.-H. Chen, Y.-H. Lin, S.-R. Lin, and T.-Y. Tsai, "A high efficiency and fast transient digital low-dropout regulator with the burst mode corresponding to the power-saving modes of dc–dc switching converters," *IEEE Transactions on Power Electronics*, vol. 35, no. 4, pp. 3997–4008, 2019.

[12] R. Umaz, "Design of a single-stage power converter operating in burst and continuous modes for low-power energy sources," *IEEE Transactions on Circuits and Systems II: Express Briefs*, vol. 68, no. 1, pp. 421–425, 2020.

[13] M. K. Rajendran, V. Priya, S. Kansal, G. Chowdary, and A. Dutta, "A 100-mv–2.5-v burst mode constant on-time-controlled battery charger with 92% peak efficiency and integrated focv technique," *IEEE Transactions on Very Large Scale Integration (VLSI) Systems*, vol. 27, no. 2, pp. 430–443, 2018.

[14] L. Zhang, R. Born, X. Zhao, B. Gu, J.-S. Lai, and H. Ma, "A parabolic voltage control strategy for burst-mode converters with constant burst frequency and eliminated audible noise," *IEEE Transactions on Power Electronics*, vol. 31, no. 12, pp. 8572–8580, 2016.

[15] J. Wang, J. Xu, and B. Bao, "Analysis of pulse bursting phenomenon in constant-on-time-controlled buck converter," *IEEE Transactions on Industrial Electronics*, vol. 58, no. 12, pp. 5406–5410, 2011.

[16] J. Zhao, L. Wu, H. Lin, X. Sun, and G. Chen, "State trajectory control of burst mode for lcc resonant converters with capacitive output filter," *IEEE Transactions on Power Electronics*, vol. 37, no. 1, pp. 377–391, 2021.

[17] E. Vladu, N. Braic, P. Martari, M. Neag, and V. Moleavin, "Digital dual mode control vcm-burst of dc-dc buck converter operating over wide ranges of input voltages and load currents," in *2023 International Semiconductor Conference (CAS)*. IEEE, 2023, pp. 167–170.

[18] J.-P. He, X.-R. Liu, Y.-K. Xia, Y.-Q. Chen, and C.-D. Wu, "A voltage ripple compensation method for constant on-time buck converter," *IEEE Access*, vol. 11, pp. 139 628–139 642, 2023.