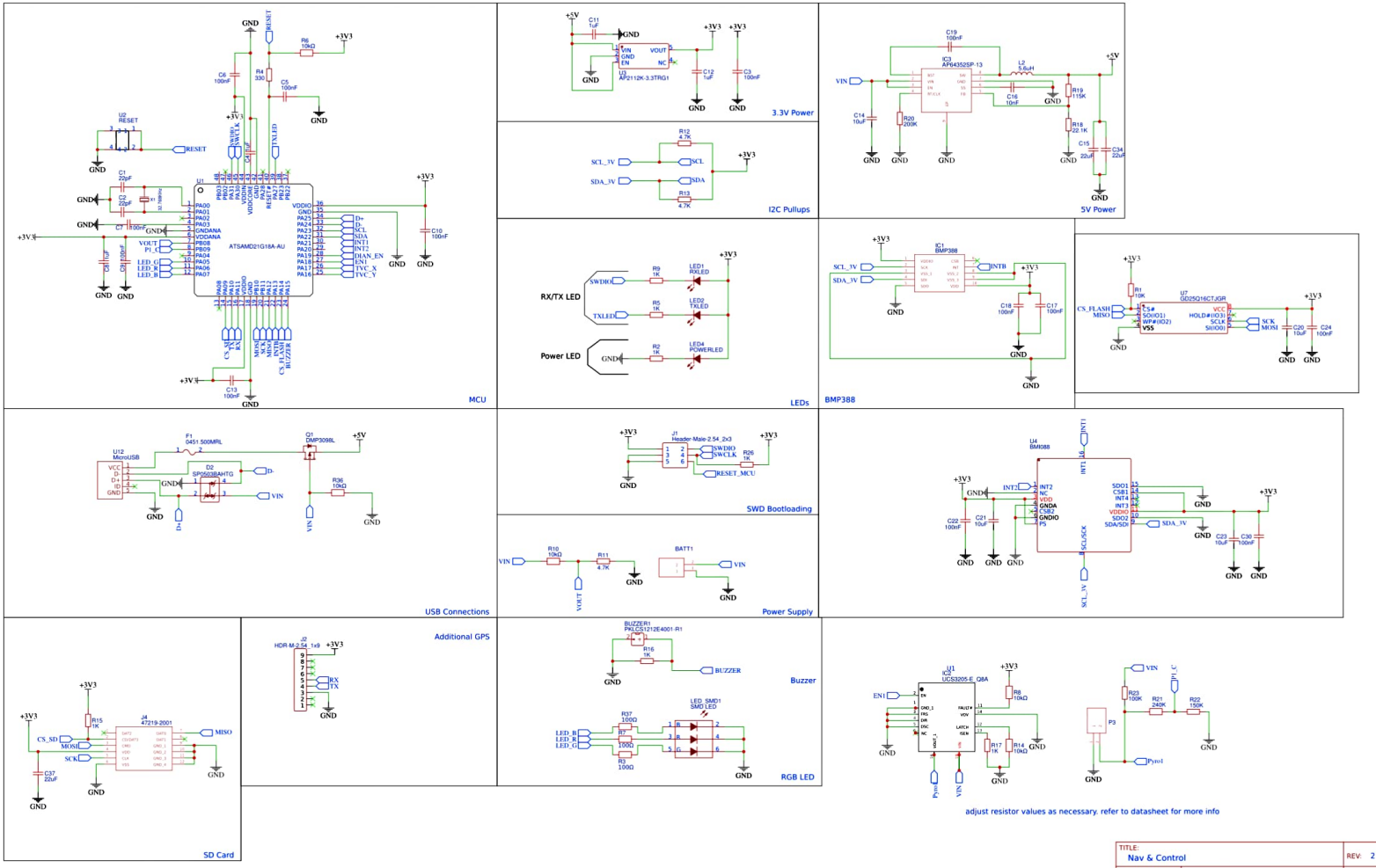
MCU
ATSAMD21G18A-AU
3.3V Power
I2C Pullups
5V Power
LEDs
RX/TX LED
Power LED
BMP388
USB Connections
SWD Bootloading
Power Supply
Additional GPS
Buzzer
RGB LED
SD Card
adjust resistor values as necessary. refer to datasheet for more info
TITLE:
Nav & Control
REV: 2
Company: NM Rocketry
Sheet: 1/1
Date: 2021-05-29
Drawn By: Daniel