VER	Description	DATE	BY
Ver 1	Initial Release	12/12/2025	DIT

BlockDiagram

MYIR Zturnboard Shield

File: BlockDiagram.kicad_sch

Sheet: /
File: ZTURNSHIELD-V1a.kicad_sch

Title:

Size: A4	Date:	**Rev:**
KiCad E.D.A. 9.0.7		Id: 1/11

PSU

Power Supply

File: PSU.kicad_sch

LCD_CTRL

LCD

File: sheet4.kicad_sch

VIDEO_DECODER

VID DECODER

File: VIDEO_DECODER.kicad_sch

Z-TurnBoard

Zturn Board XC7Z020

File: sheet3.kicad_sch

DAC

DAC

File: DAC.kicad_sch

ADC

ADC

File: ADC.kicad_sch

VIDEO_ENCODER

VID ENCODER

File: VIDEO_ENCODER.kicad_sch

LVDS

LVDS

File: LVDS.kicad_sch

IO CAP

I/O

File: sheet2.kicad_sch

Sheet: /BlockDiagram/
File: BlockDiagram.kicad_sch

Title:

Size: A4	Date:	**Rev:**
KiCad E.D.A. 9.0.7		Id: 2/11

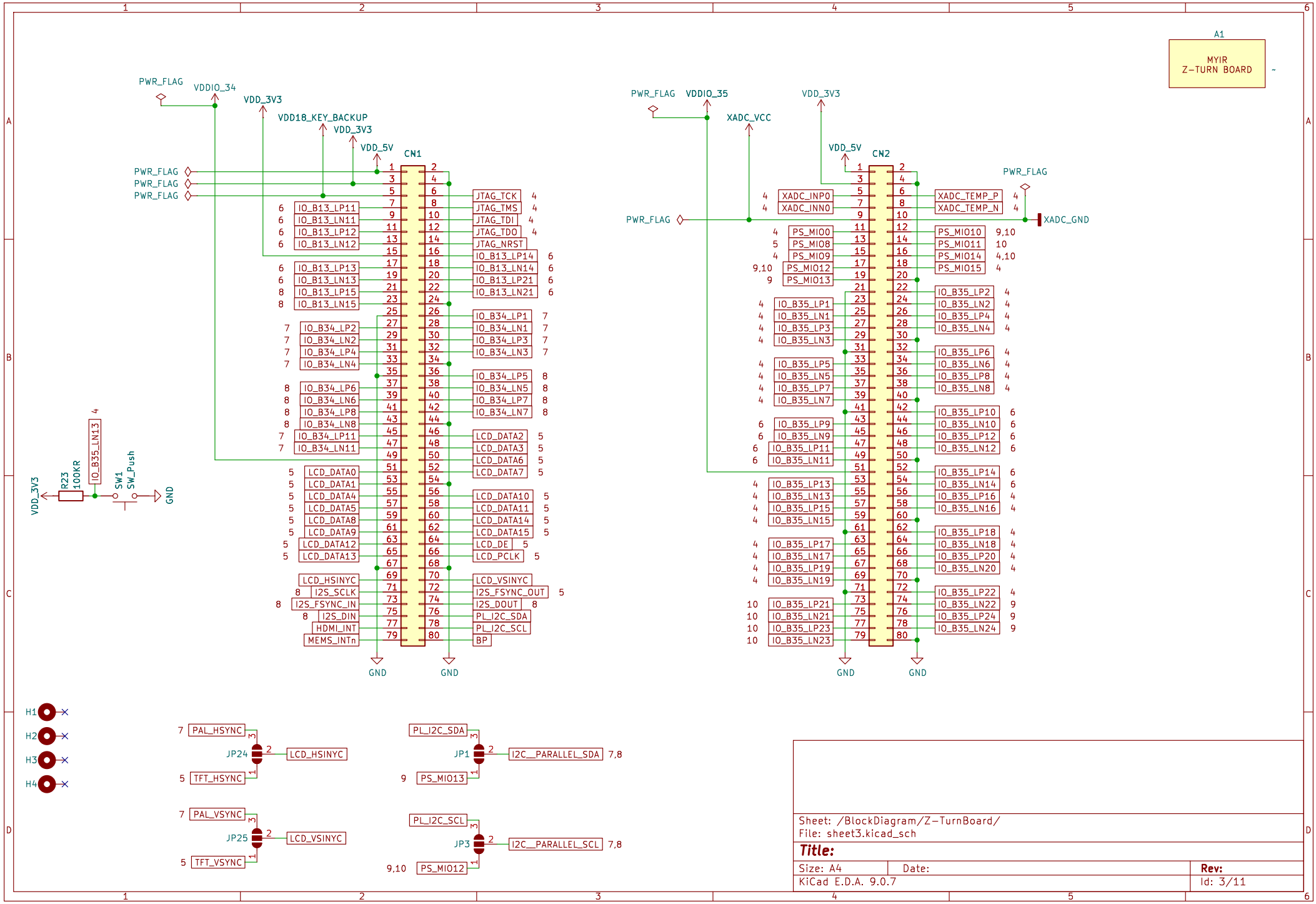

Sheet: /BlockDiagram/Z-TurnBoard/
File: sheet3.kicad_sch

Title:

Size: A4	Date:	Rev:
KiCad E.D.A. 9.0.7		Id: 3/11

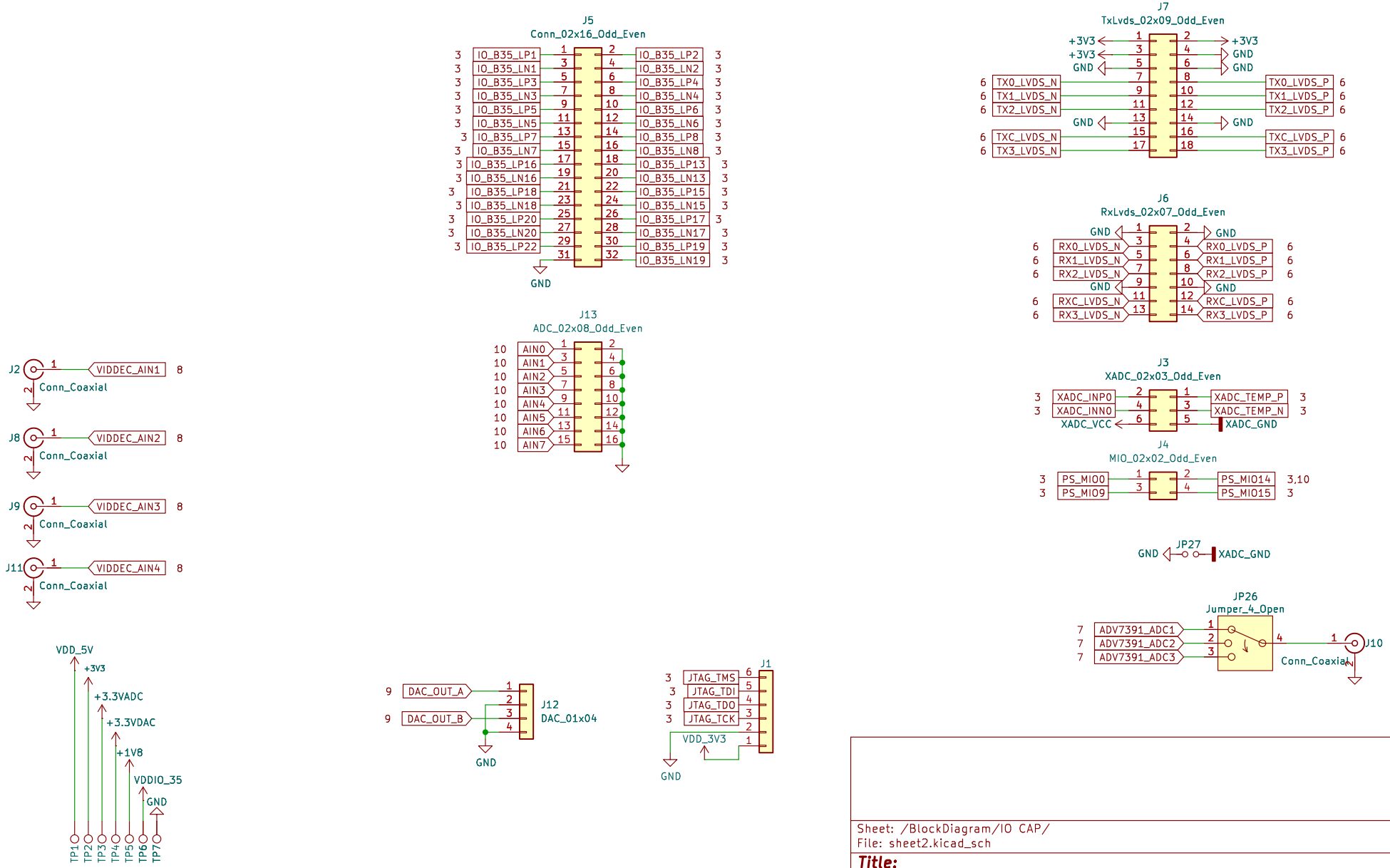

Sheet: /BlockDiagram/IO CAP/
File: sheet2.kicad_sch

Title:

Size: A4	Date:	Rev:
KiCad E.D.A. 9.0.7		Id: 4/11

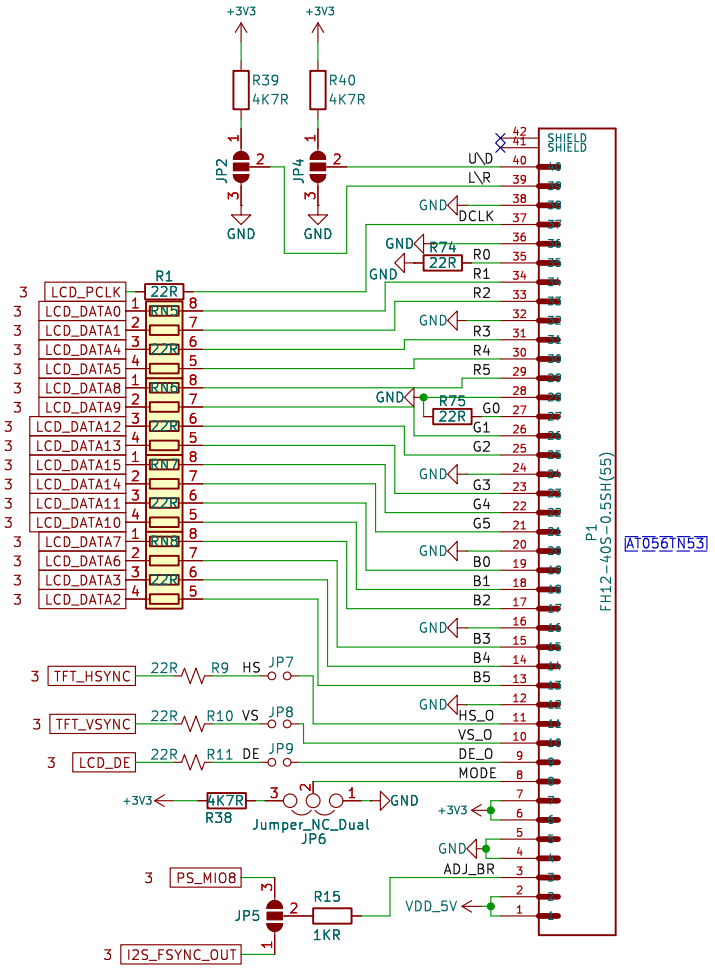

Sheet: /BlockDiagram/LCD_CTRL/
File: sheet4.kicad_sch

Title:

Size: A4	Date:	Rev:
KiCad E.D.A. 9.0.7		Id: 5/11

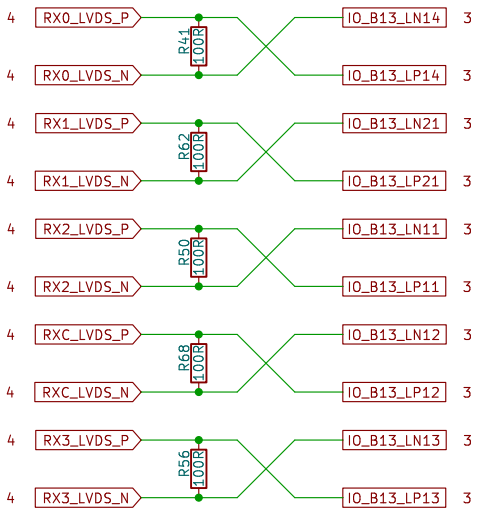

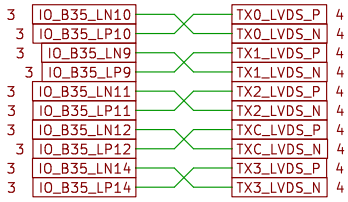

Note:
- LVDS_25 (2.5V) is supported in HR IO bank ONLY and requires VCCO to be powered at 2.5V
- LVDS (1.8V) is supported in HP IO bank ONLY and requires VCCO to be powered at 1.8V
- You can use 1.8V LVDS as an input to HR IO bank and 2.5V LVDS as input to HP IO bank by meeting few criterias.
- To see the criteria to be meat, please see following UG page #92 last paragraph.
http://www.xilinx.com/support/documentation/user_guides/ug471_7Series_SelectIO.pdf

Attributes	**IBUFDS, IBUFGDS, IBUFDS_DIFF_OUT, or IBUFGDS_DIFF_OUT**	**OBUFDS or OBUFTDS**
IOSTANDARD	LVDS (HP I/O Banks) or LVDS_25 (HR I/O Banks)	LVDS (HP I/O Banks) or LVDS_25 (HR I/O Banks)
DIFF_TERM	TRUE, FALSE	N/A

Sheet: /BlockDiagram/LVDS/
File: LVDS.kicad_sch

Title:

Size: A4	Date:	**Rev:**
KiCad E.D.A. 9.0.7		Id: 6/11

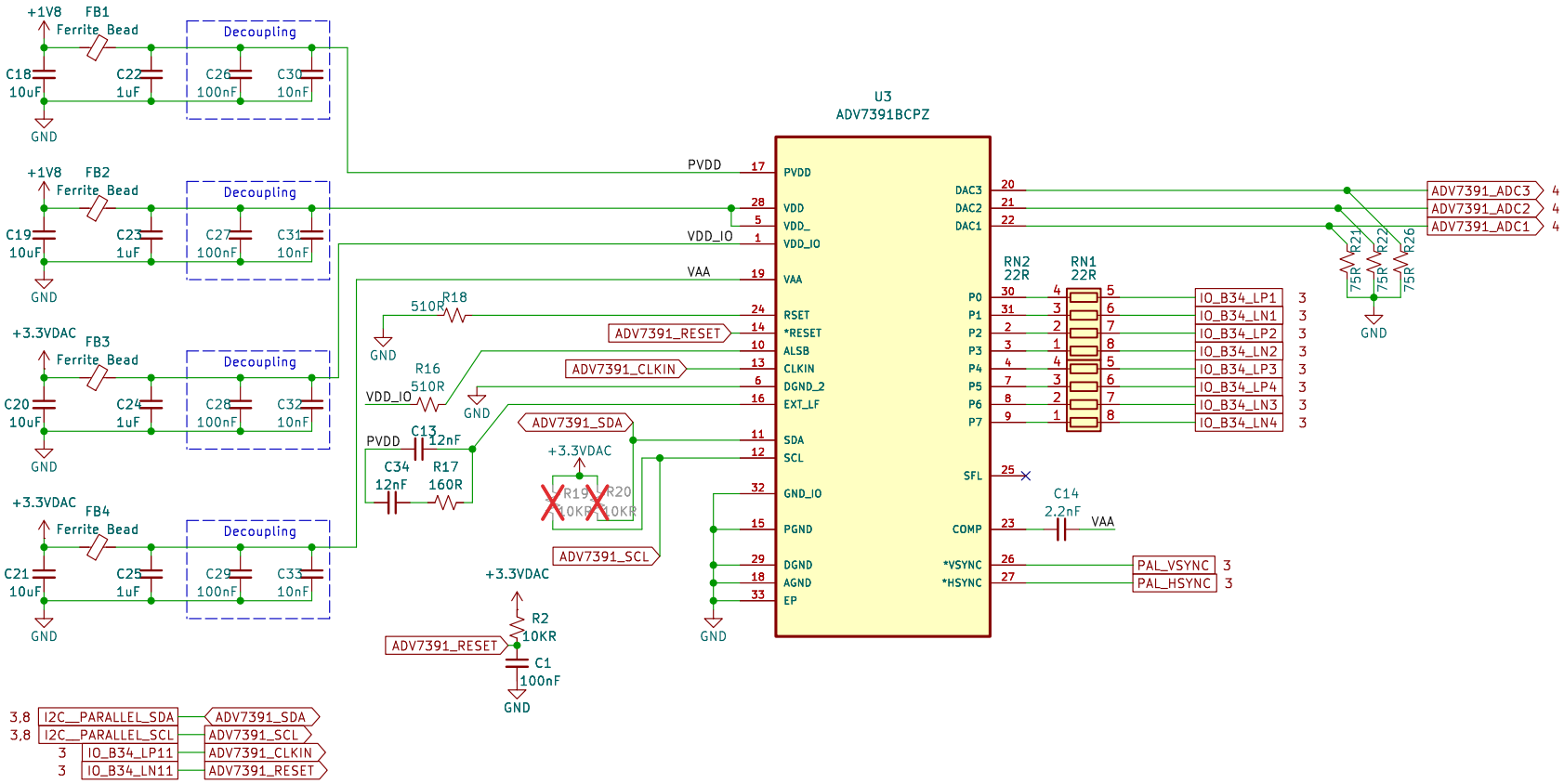

Sheet: /BlockDiagram/VIDEO_ENCODER/
File: VIDEO_ENCODER.kicad_sch

Title:

Size: A4	Date:	Rev:
KiCad E.D.A. 9.0.7		Id: 7/11

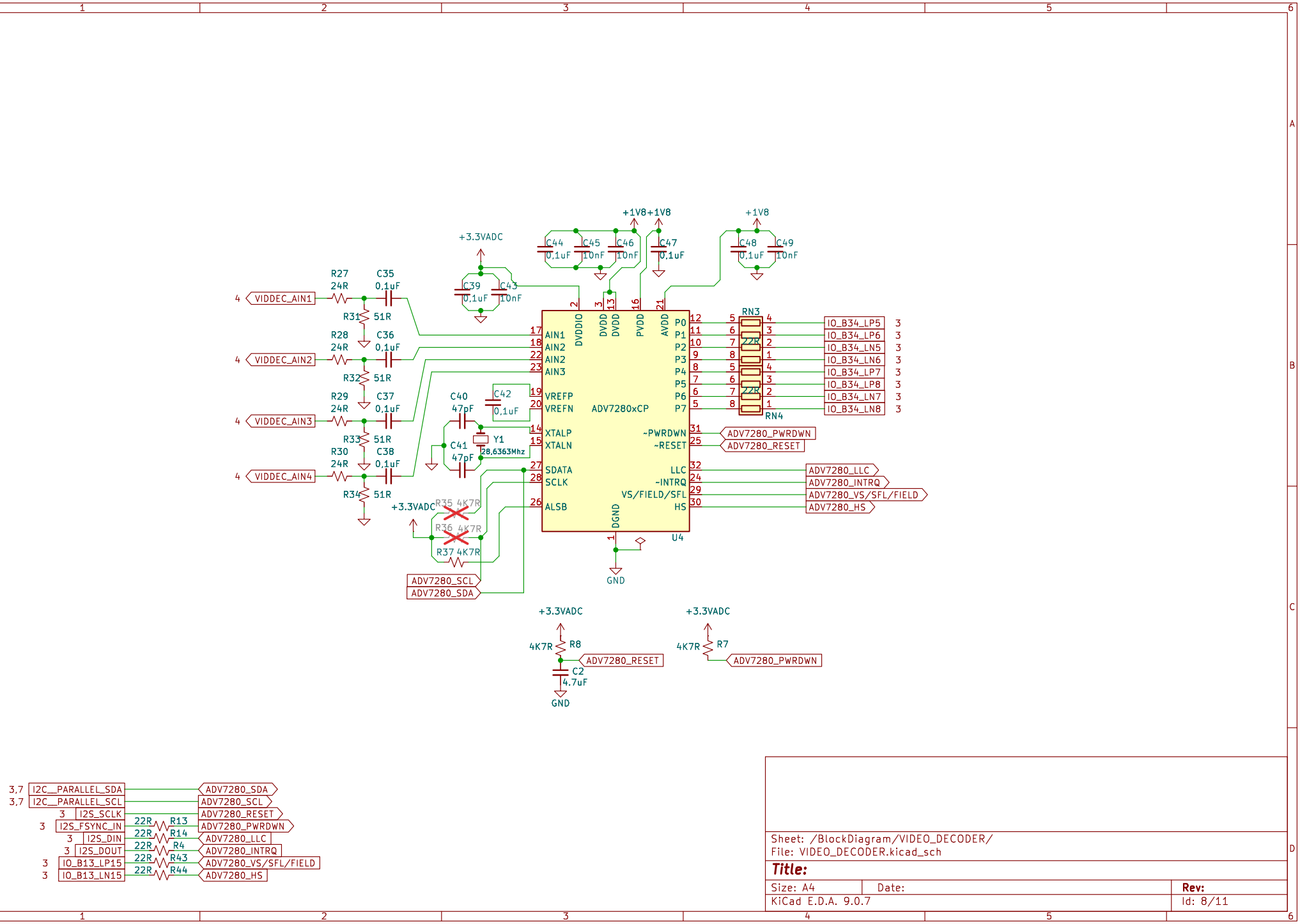

Sheet: /BlockDiagram/VIDEO_DECODER/
File: VIDEO_DECODER.kicad_sch

Title:

Size: A4	Date:	Rev:
KiCad E.D.A. 9.0.7		Id: 8/11

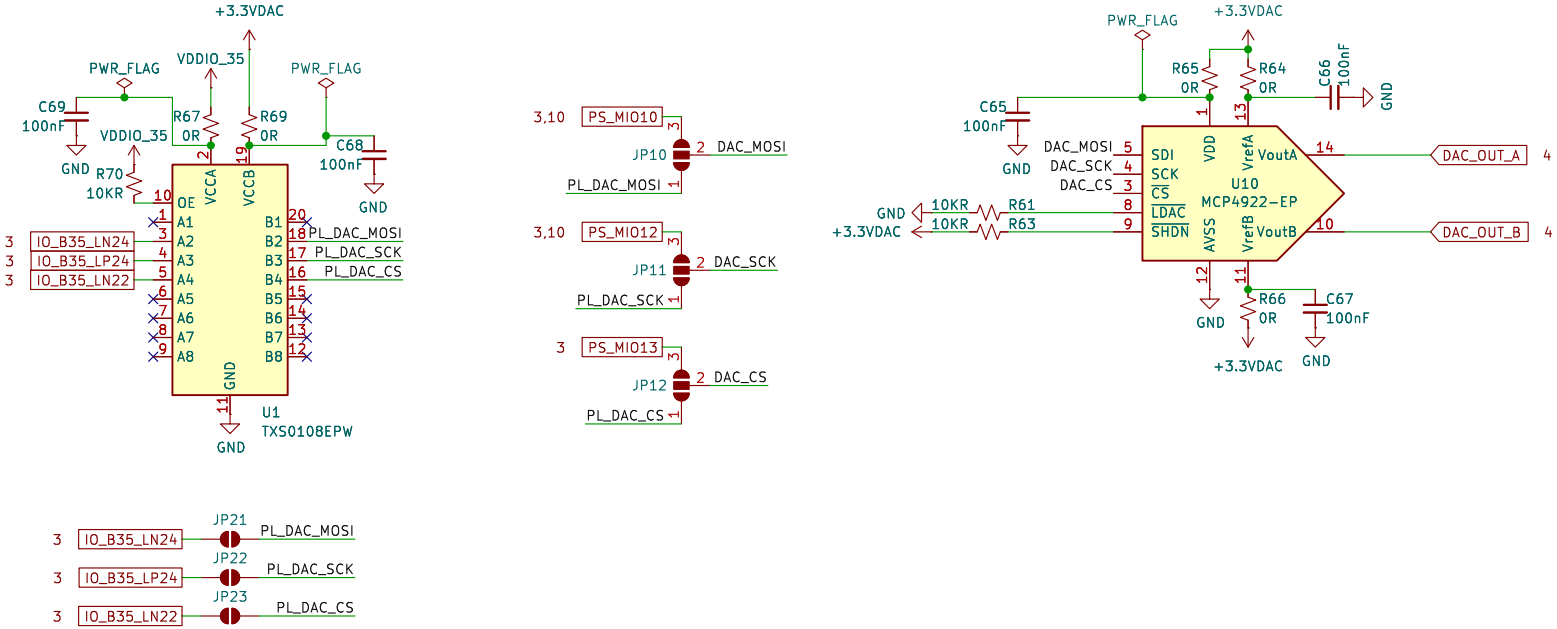

Sheet: /BlockDiagram/DAC/
File: DAC.kicad_sch

Title:

Size: A4	Date:	Rev:
KiCad E.D.A. 9.0.7		Id: 9/11

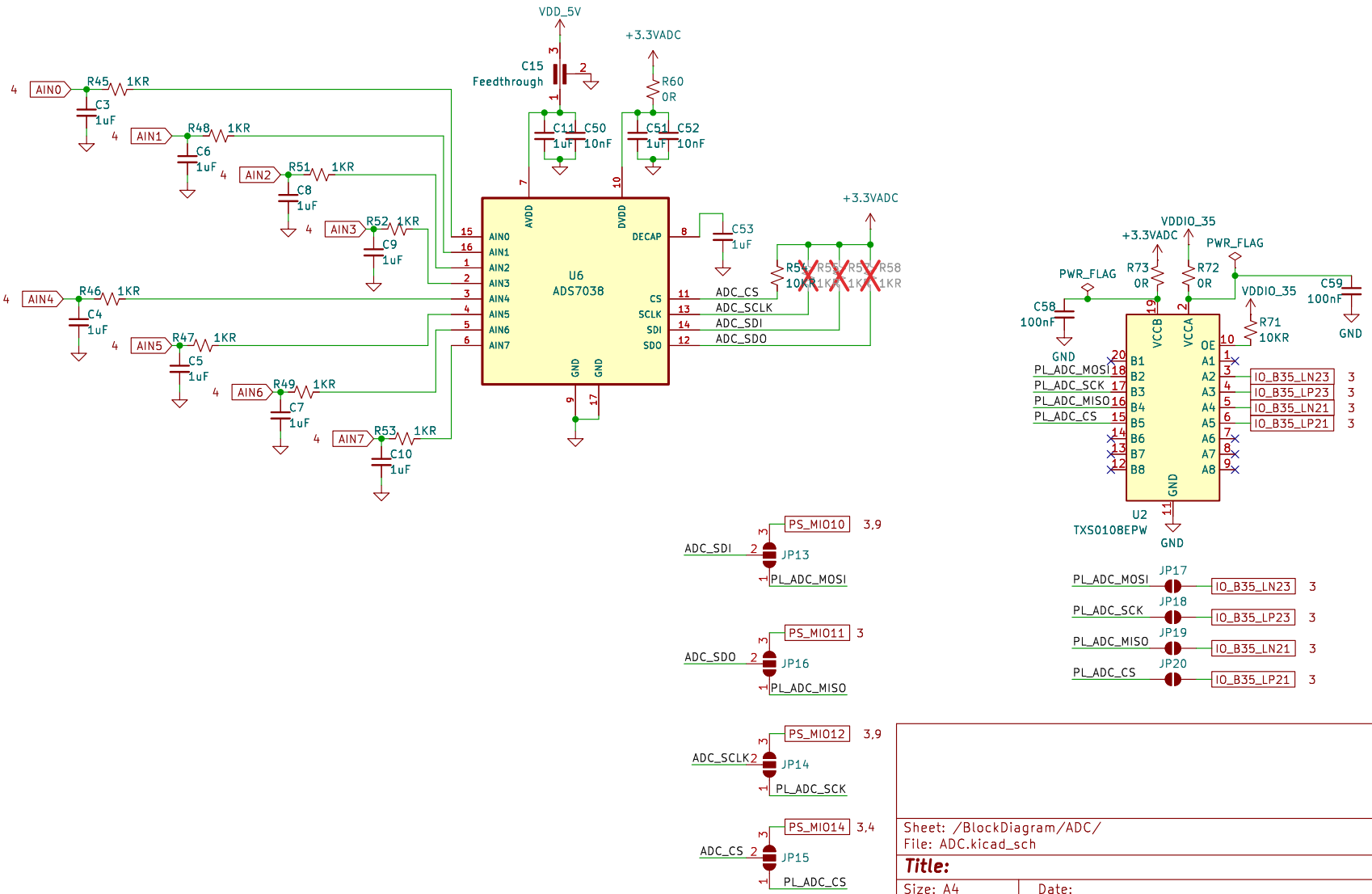

Sheet: /BlockDiagram/ADC/
File: ADC.kicad_sch

Title:

Size: A4	Date:	Rev:
KiCad E.D.A. 9.0.7		Id: 10/11

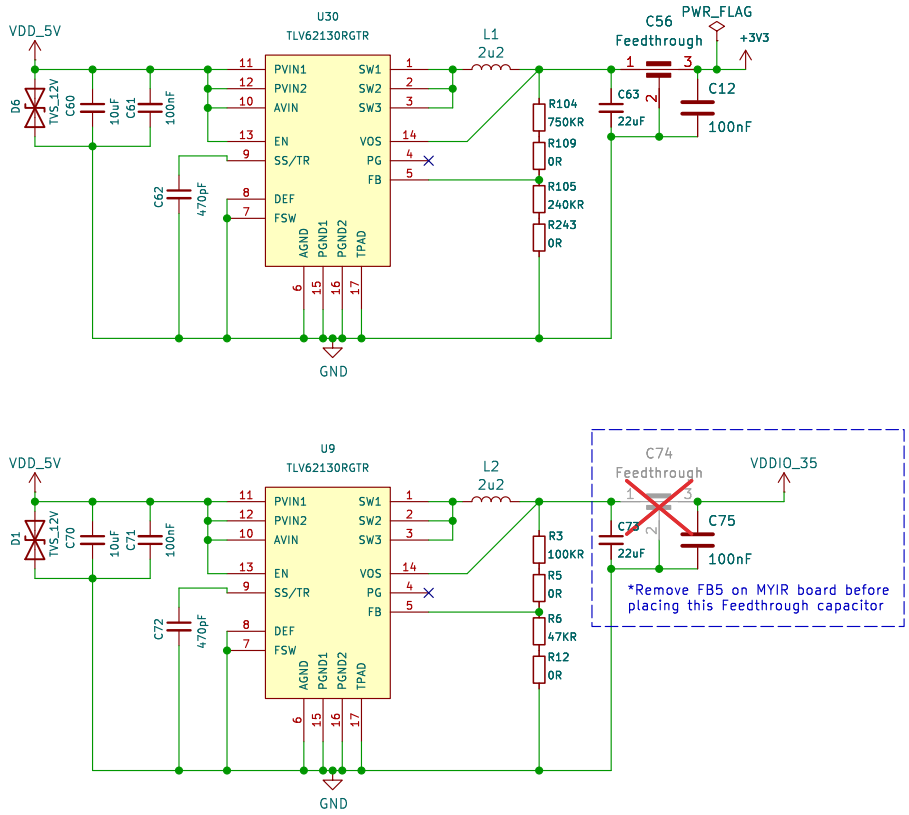

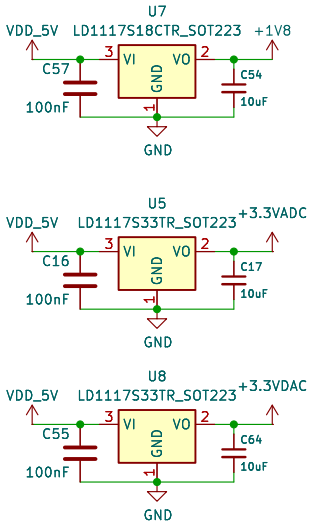

Sheet: /BlockDiagram/PSU/
File: PSU.kicad_sch

Title:

Size: A4	Date:	Rev:
KiCad E.D.A. 9.0.7		Id: 11/11