REV	Description	DATE	BY
Ver 1	Initial Release.		M
Ver 2	1 Replace HDMI Frame and SDIO Port voltage-level translation 2 Replaced USB2UART Chip		M
Ver 3	1 Add MDIO voltage-level translator 2 Modify CAN RX PULL voltage		
Ver 4	1 ADD GND_ADC to DGND 20150220 2 update sch version		

PAGE NO.	SCHEMATIC PAGE
1	TITLE PAGE
2	BLOCK
3	Z7020_PL
4	Z7020_PS
5	Z7020_POWER
6	USB OTG
7	DDR3 MEMORY
8	QSPI FLASH
9	10/100/1000 ETHERNET
10	HDMI
11	Sensor: G&T,CAN
12	NAND_FLASH
13	PWR:1.0V&1.5V,VTT
14	Power 1.8V,3.3V&DCin
15	EXP CONN
16	MISC

Title	Z7020_10_CLG400	
Size B	Document Number ZQ7020_10	Rev V4.0
Date: Monday, March 23, 2015	Sheet 1 of 16	

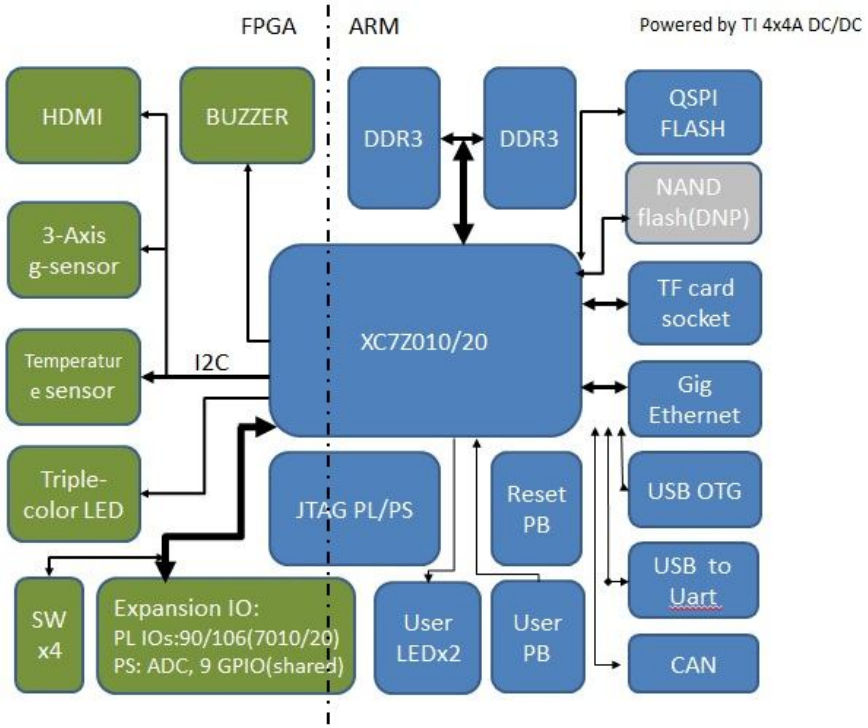

Title	Z7020_10_CLG400	
Size B	Document Number ZQ7020_10	Rev V4.0
Date: Monday, March 23, 2015	Sheet 2 of 16	

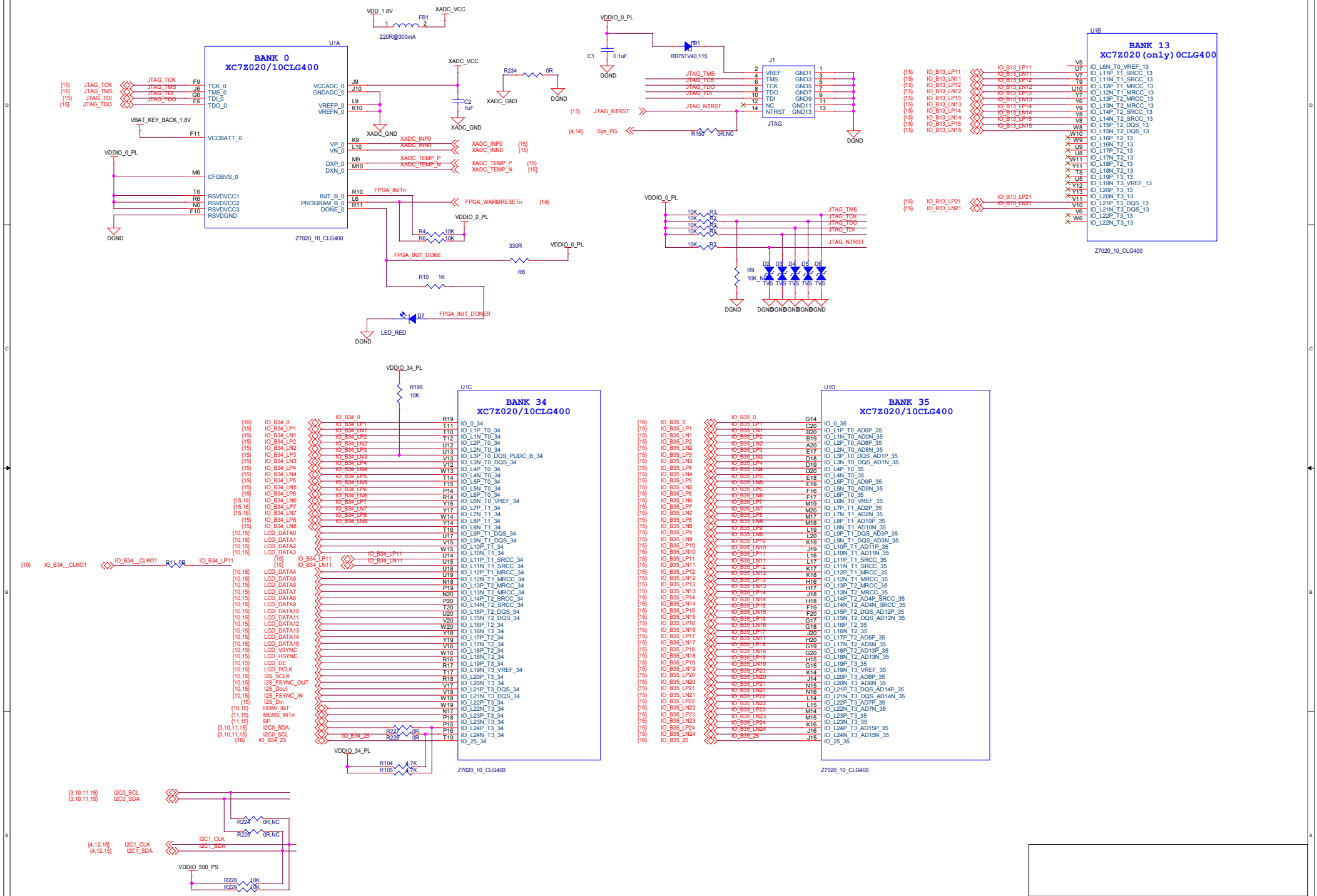

Title	Z7020_10_CLG400	
Size C	Document Number ZQ7020_10	Rev V4.0
Date: Monday, March 23, 2015	Sheet 3 of 16	

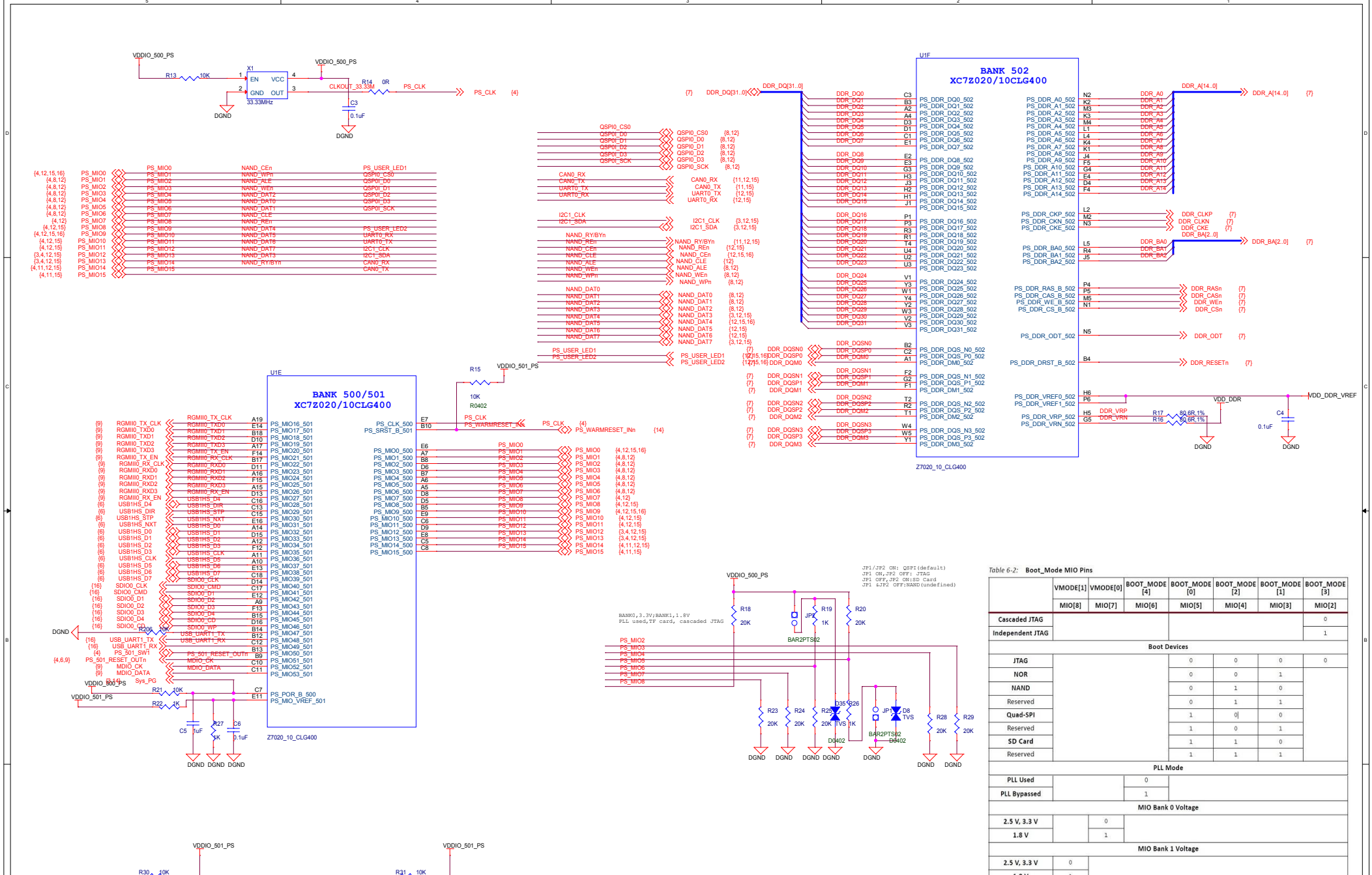

Table 6-2: **Boot_Mode MIO Pins**

	VMODE[1]	VMODE[0]	BOOT_MODE [4]	BOOT_MODE [0]	BOOT_MODE [2]	BOOT_MODE [1]	BOOT_MODE [3]
	MIO[8]	MIO[7]	MIO[6]	MIO[5]	MIO[4]	MIO[3]	MIO[2]
Cascaded JTAG							0
Independent JTAG							1
Boot Devices							
JTAG				0	0	0	0
NOR				0	0	1	
NAND				0	1	0	
Reserved				0	1	1	
Quad-SPI				1	0	0	
Reserved				1	0	1	
SD Card				1	1	0	
Reserved				1	1	1	
PLL Mode							
PLL Used			0				
PLL Bypassed			1				
MIO Bank 0 Voltage							
2.5 V, 3.3 V		0					
1.8 V		1					
MIO Bank 1 Voltage							
2.5 V, 3.3 V	0						
1.8 V	1						

Title	Z7020_10_CLG400	
Size C	Document Number ZQ7020_10	Rev V4.0
Date: Monday, March 23, 2015	Sheet 4 of 16	

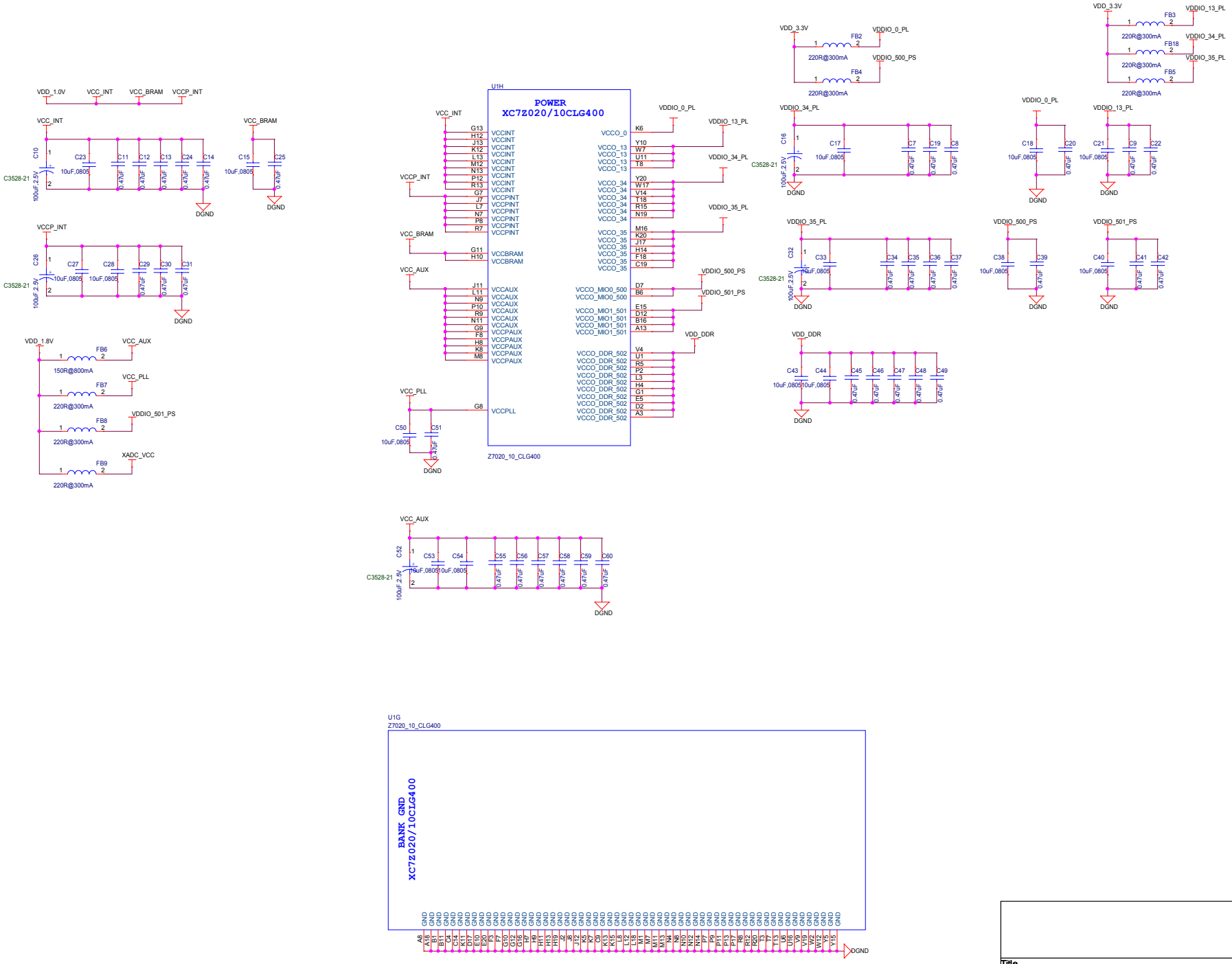

Title	Z7020_10_CLG400		
Size C	Document Number ZQ7020_10		Rev V4.0
Date: Monday, March 23, 2015		Sheet 5 of 16	

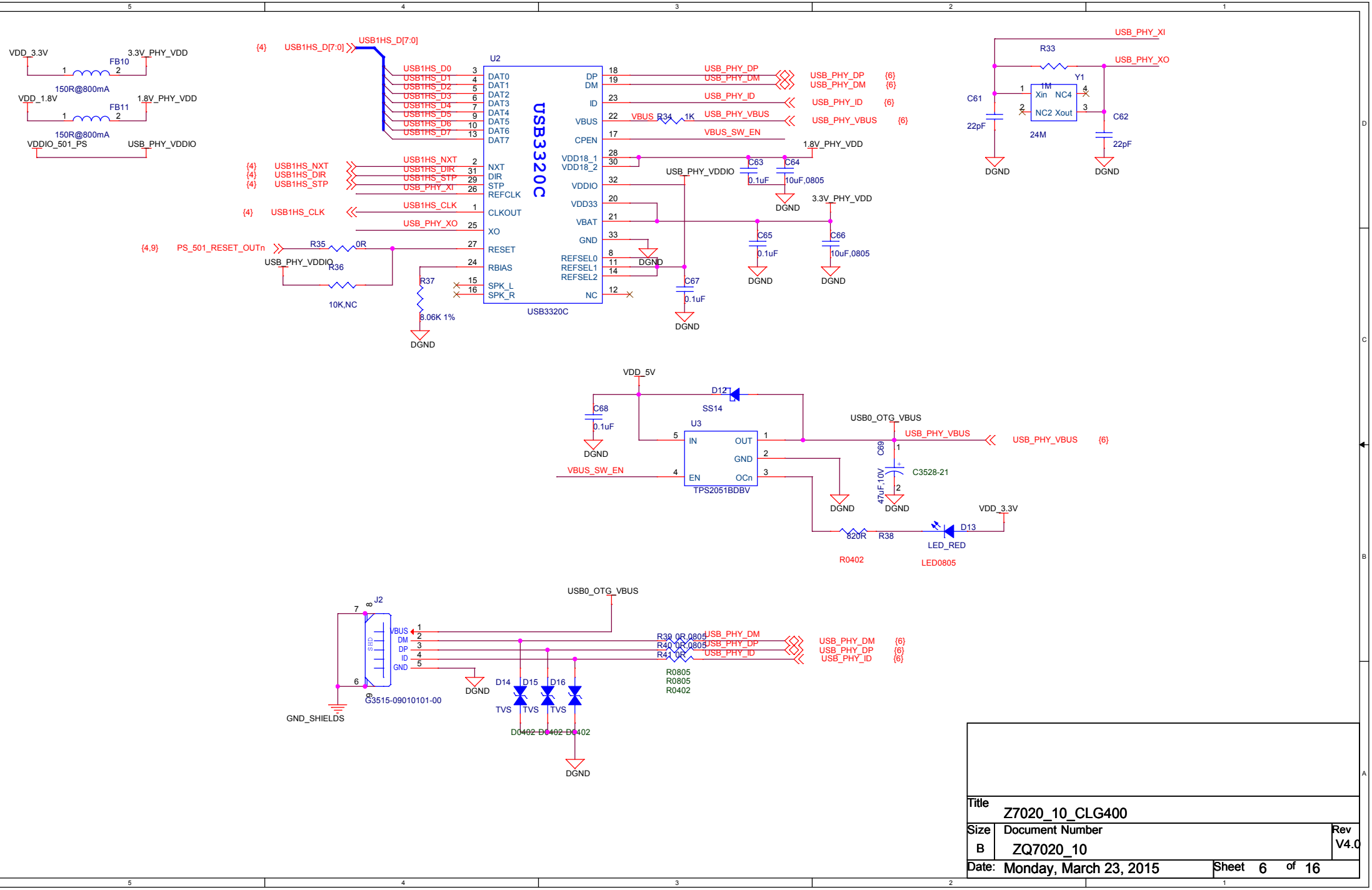

Title	Z7020_10_CLG400	
Size B	Document Number ZQ7020_10	Rev V4.0
Date: Monday, March 23, 2015	Sheet 6 of 16	

1024MB DDR3 (x32)

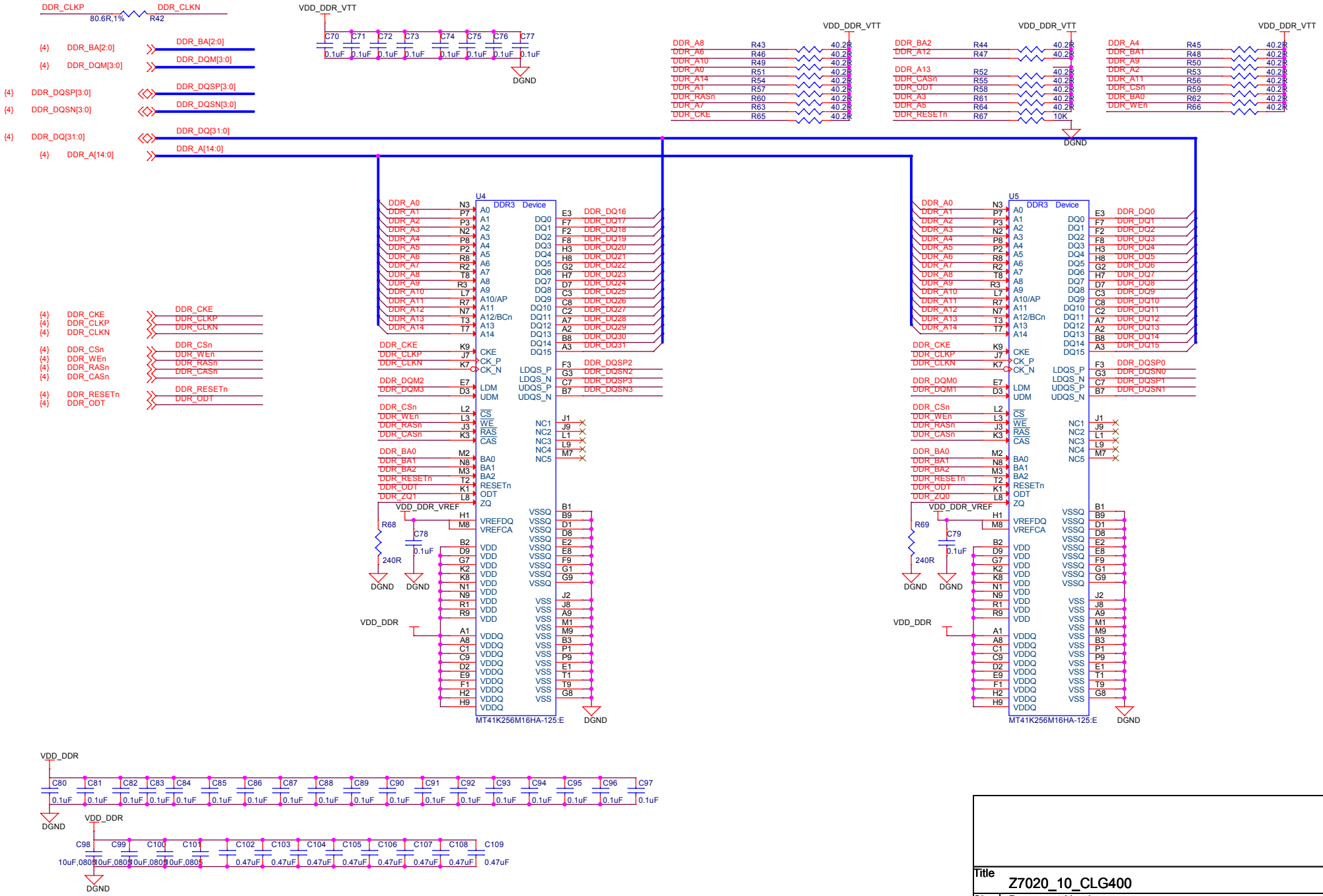

Title	Z7020_10_CLG400
Size	A3
Document Number	ZQ7020_10
Rev	V4.0
Date:	Monday, March 23, 2015
Sheet	7 of 16

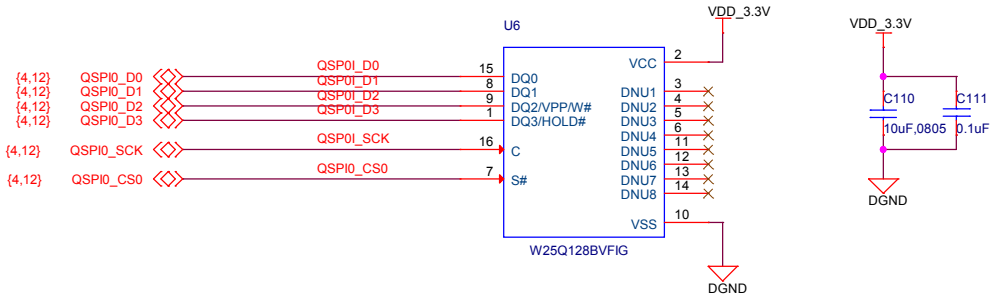

Title	Z7020_10_CLG400	
Size B	Document Number ZQ7020_10	Rev V4.0
Date: Monday, March 23, 2015	Sheet 8 of 16	

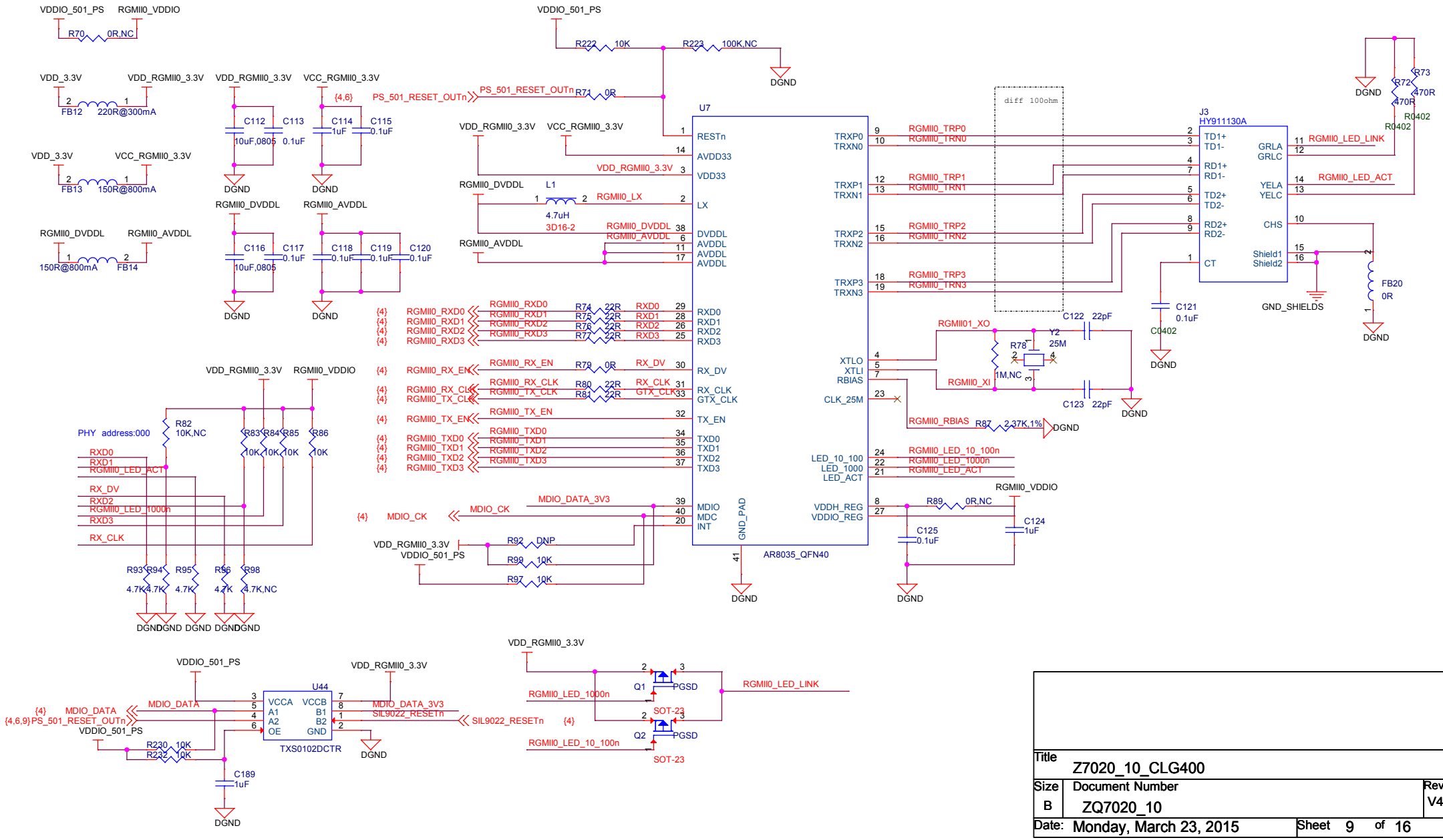

Title	Z7020_10_CLG400		
Size B	Document Number ZQ7020_10		Rev V4.0
Date: Monday, March 23, 2015		Sheet 9 of 16	

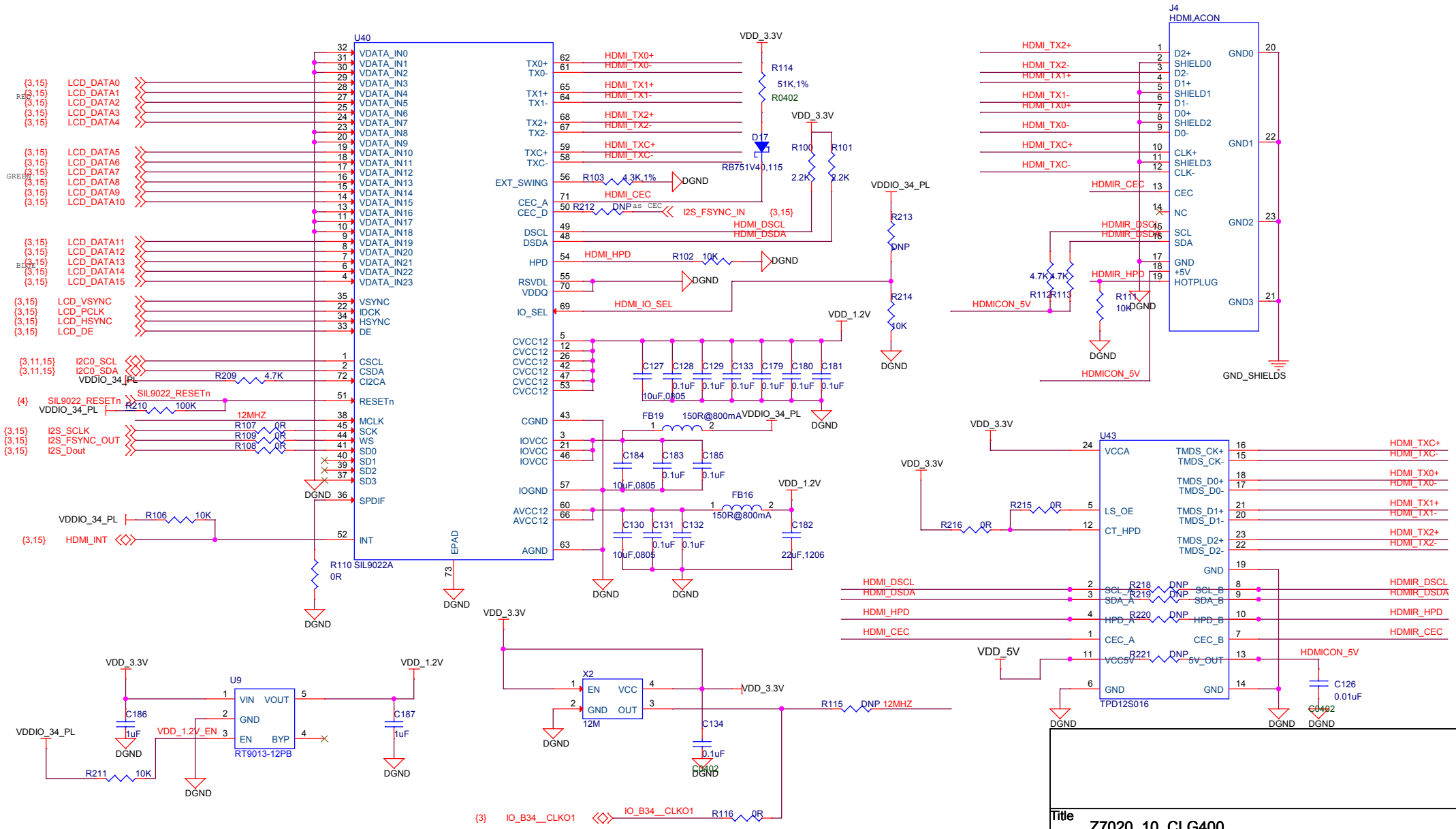

Title: Z7020_10_CLG400

Size: B | Document Number: ZQ7020_10 | Rev: V4.0

Date: Monday, March 23, 2015 | Sheet 10 of 16

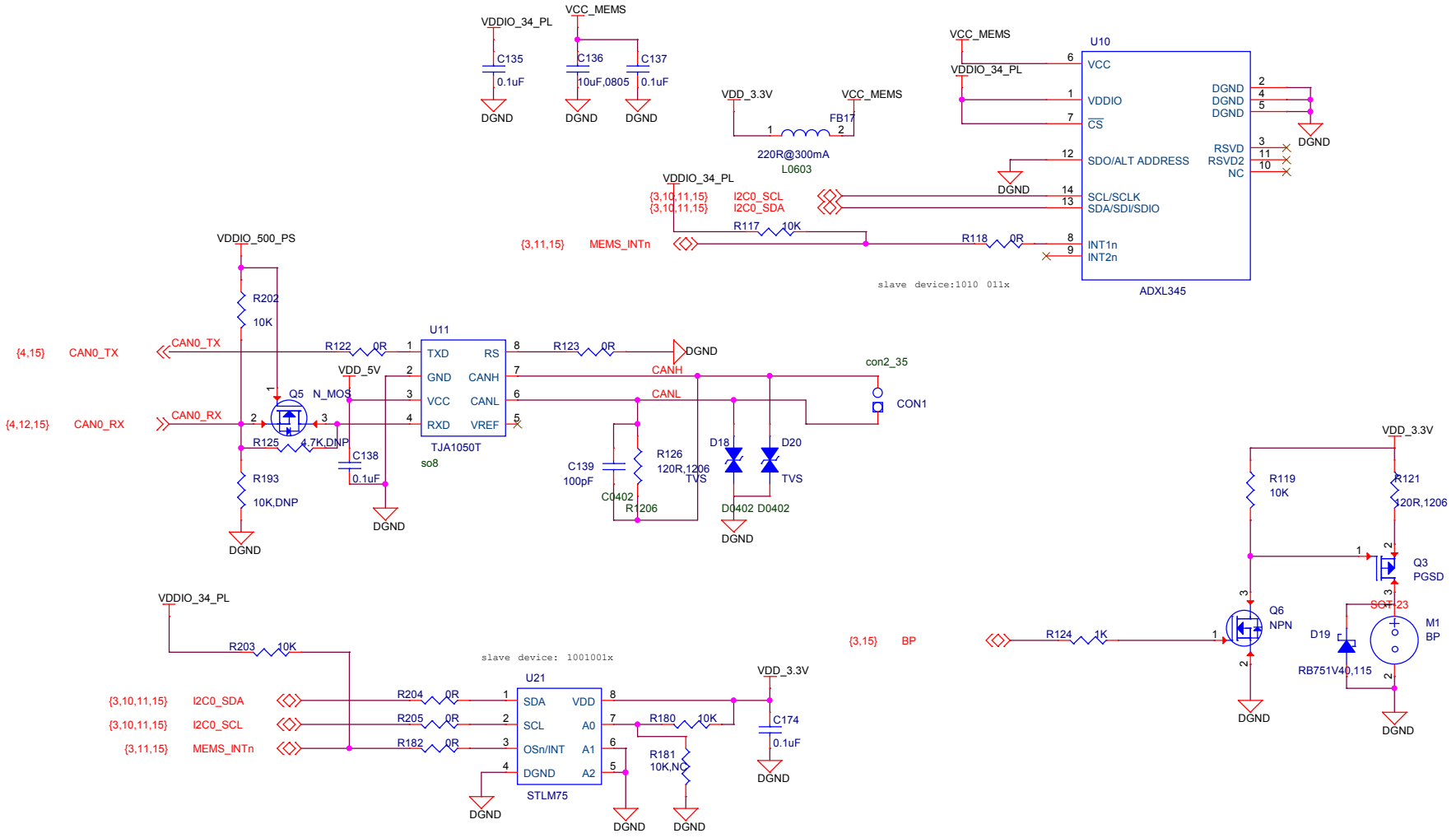

Title	Z7020_10_CLG400	
Size B	Document Number ZQ7020_10	Rev V4.0
Date: Monday, March 23, 2015	Sheet 11 of 16	

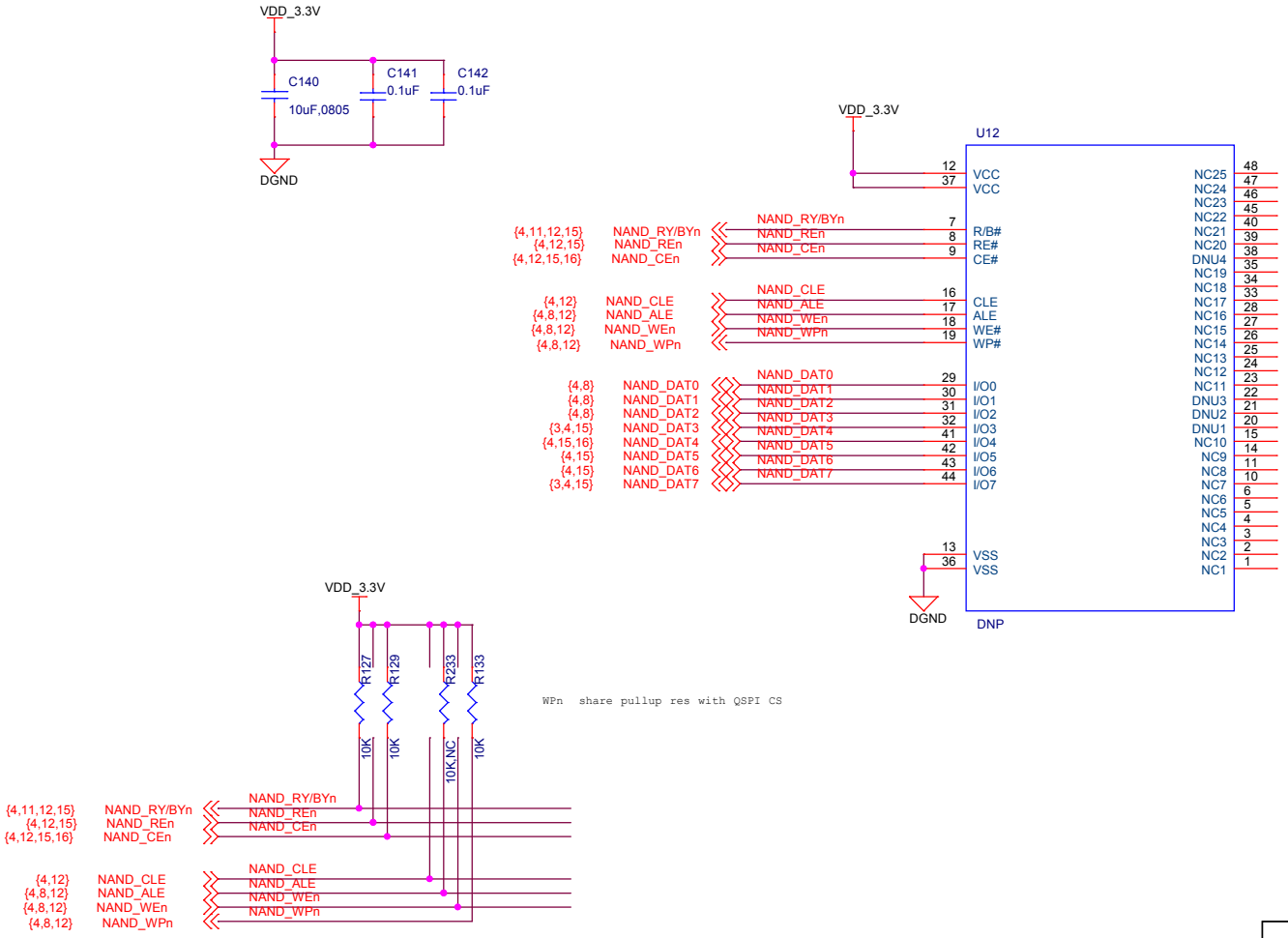

Title	Z7020_10_CLG400	
Size B	Document Number ZQ7020_10	Rev V4.0
Date: Monday, March 23, 2015	Sheet 12 of 16	

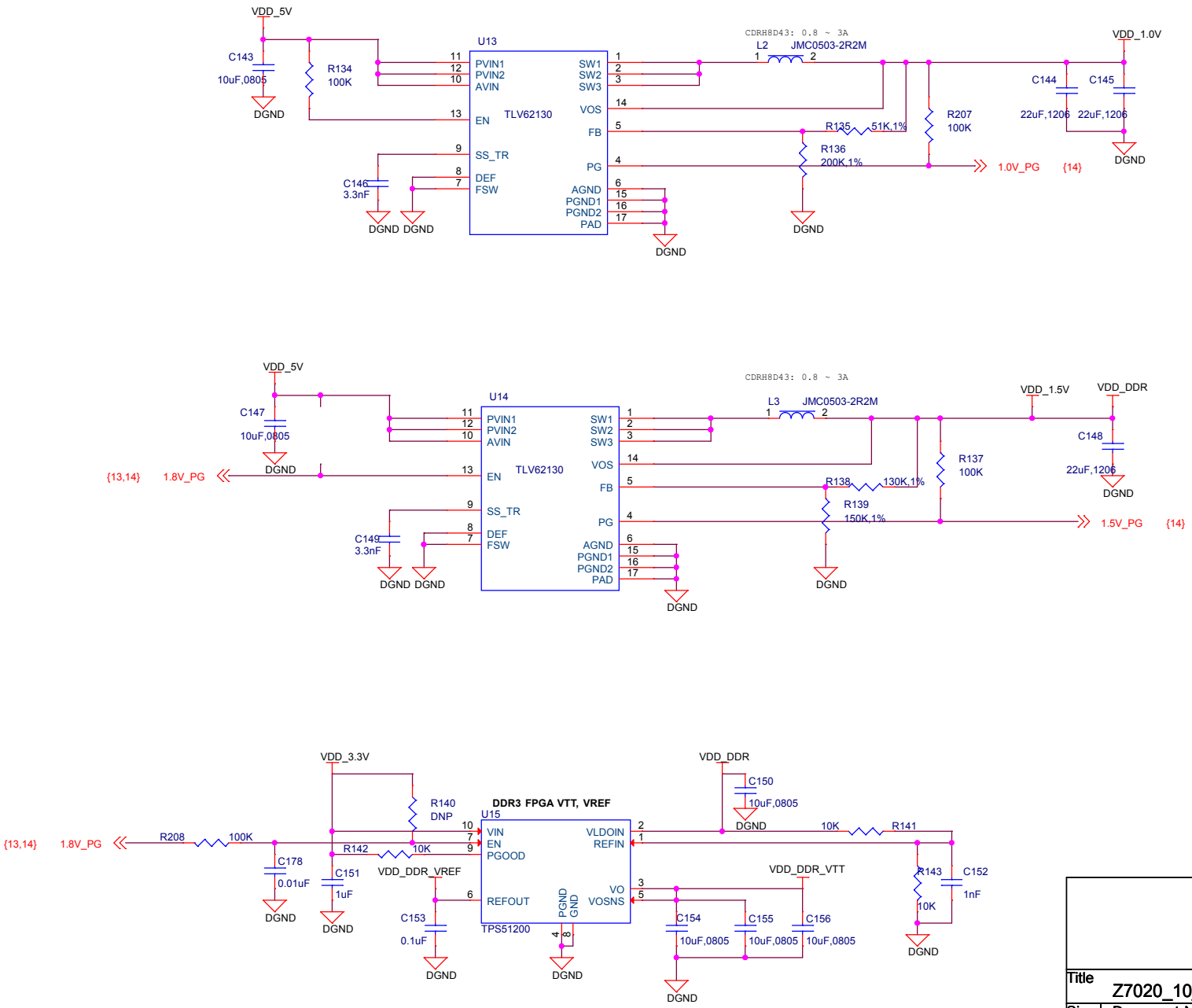

Title	Z7020_10_CLG400	
Size B	Document Number ZQ7020_10	Rev V4.0
Date: Monday, March 23, 2015	Sheet 13 of 16	

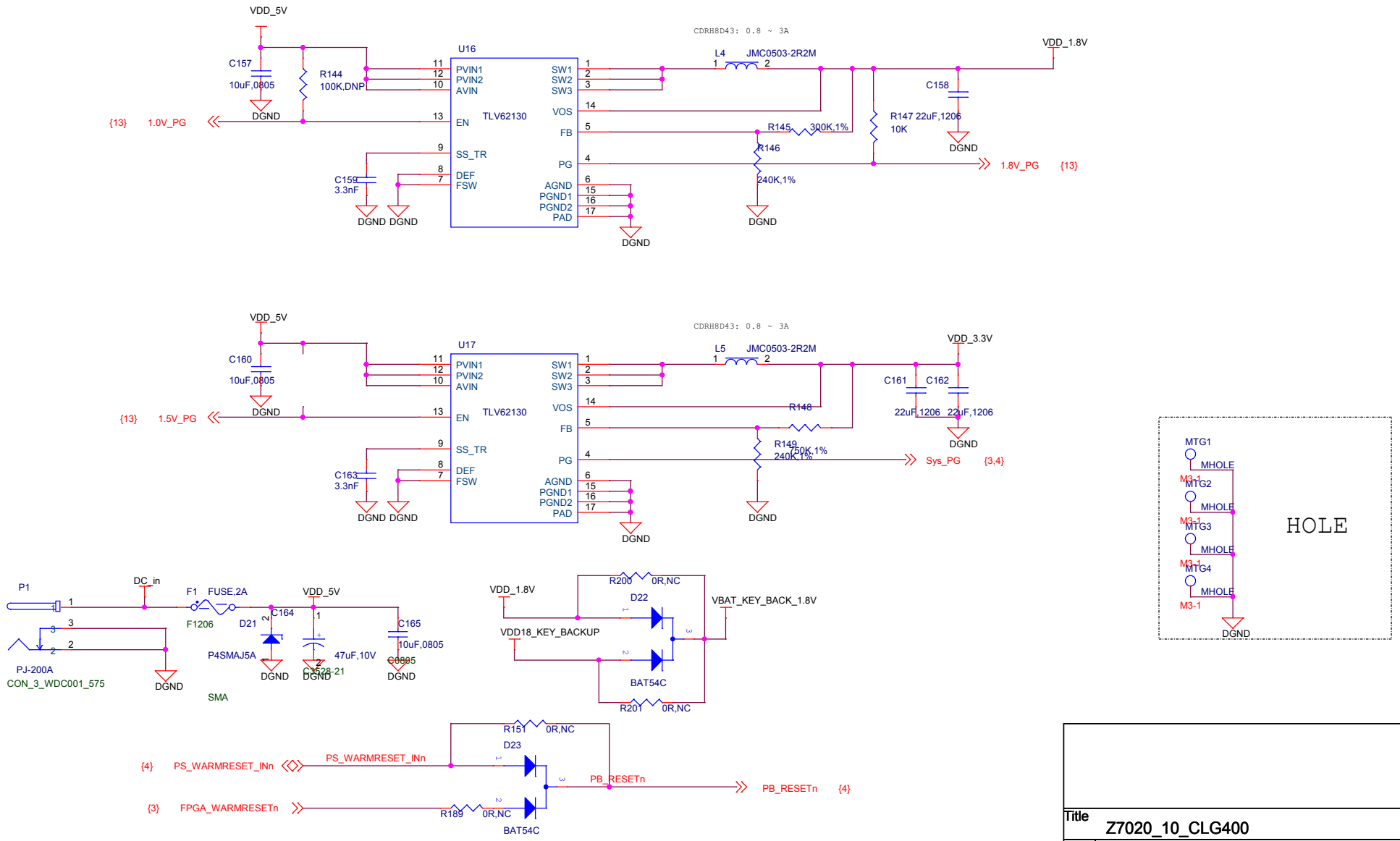

Title	Z7020_10_CLG400	
Size B	Document Number ZQ7020_10	Rev V4.0
Date: Monday, March 23, 2015	Sheet 14 of 16	

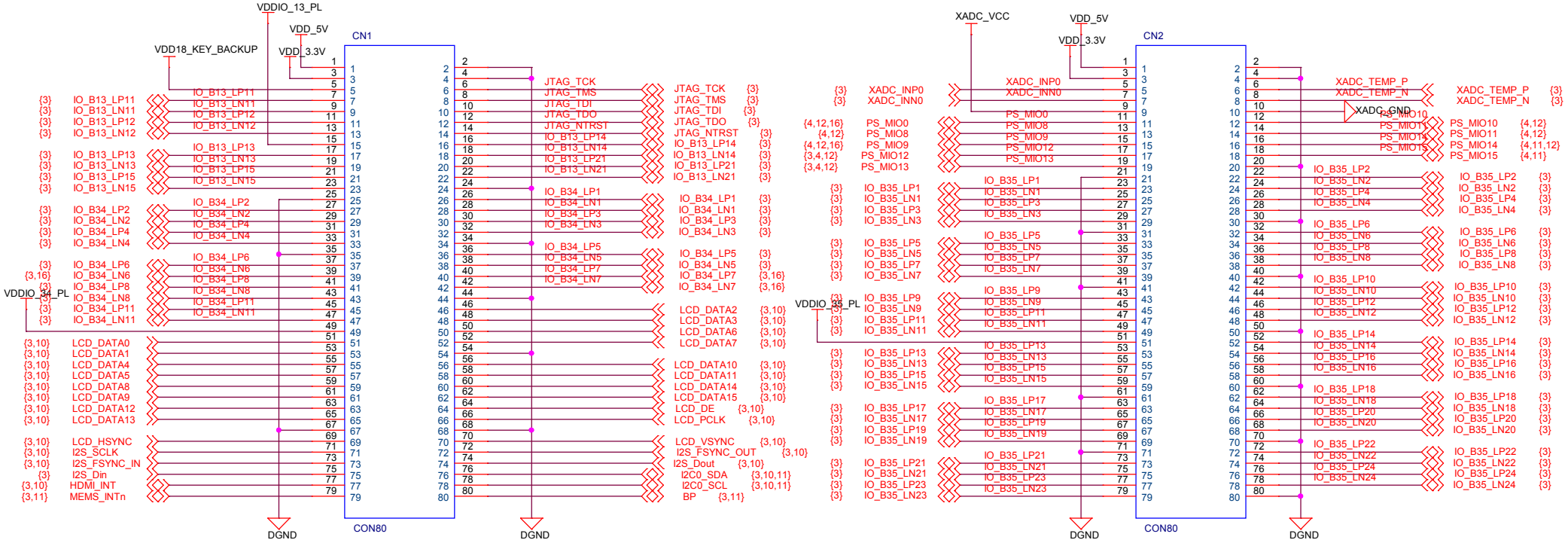

Title	Z7020_10_CLG400	
Size B	Document Number ZQ7020_10	Rev V4.0
Date: Monday, March 23, 2015	Sheet 15 of 16	

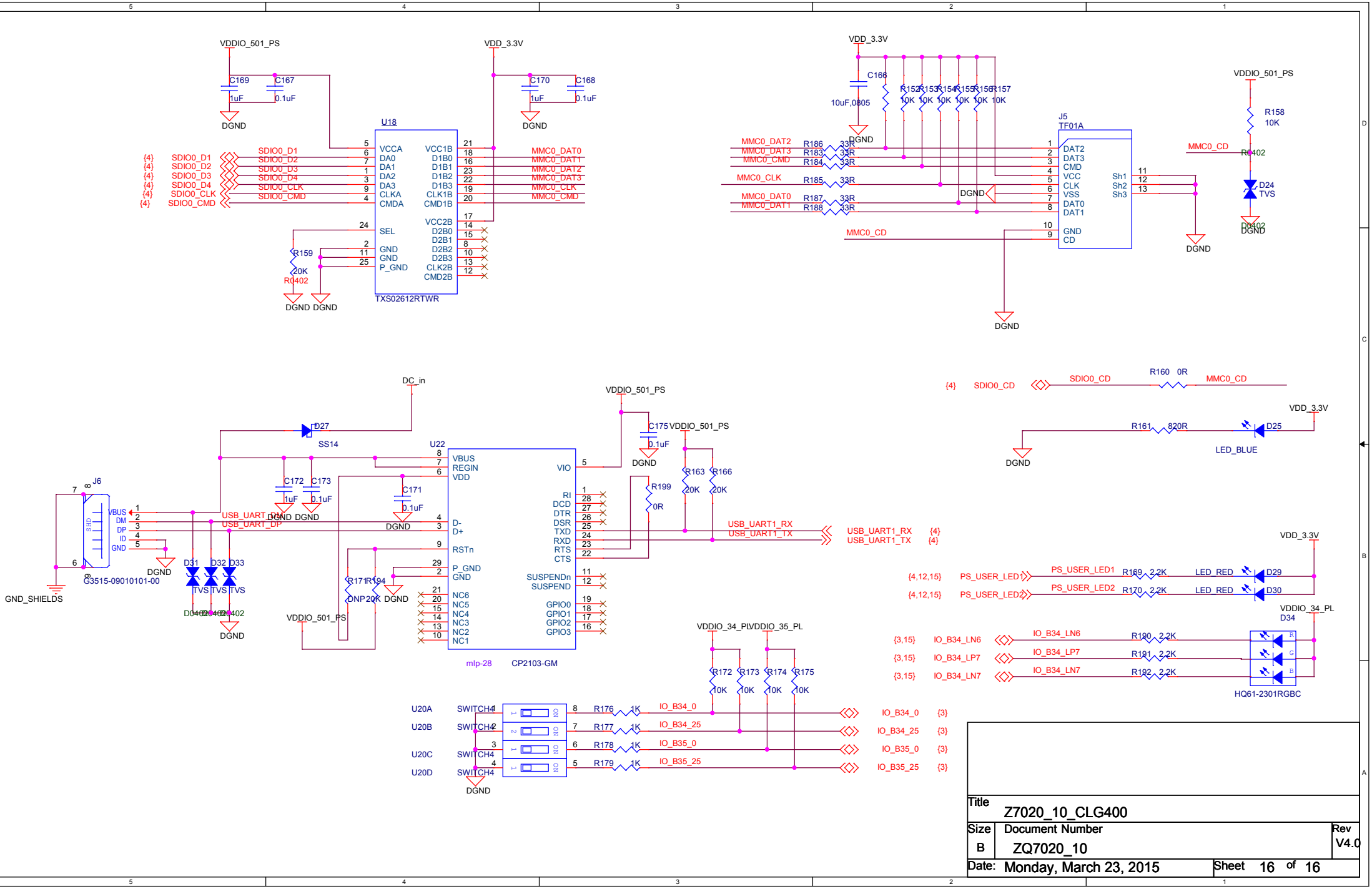

Title	Z7020_10_CLG400	
Size B	Document Number ZQ7020_10	Rev V4.0
Date: Monday, March 23, 2015	Sheet 16 of 16	