BASIC MECHANICAL ENGINEERING (PART B)
ASSIGNMENT

Q1. Give the classification of Engineering Materials with examples.

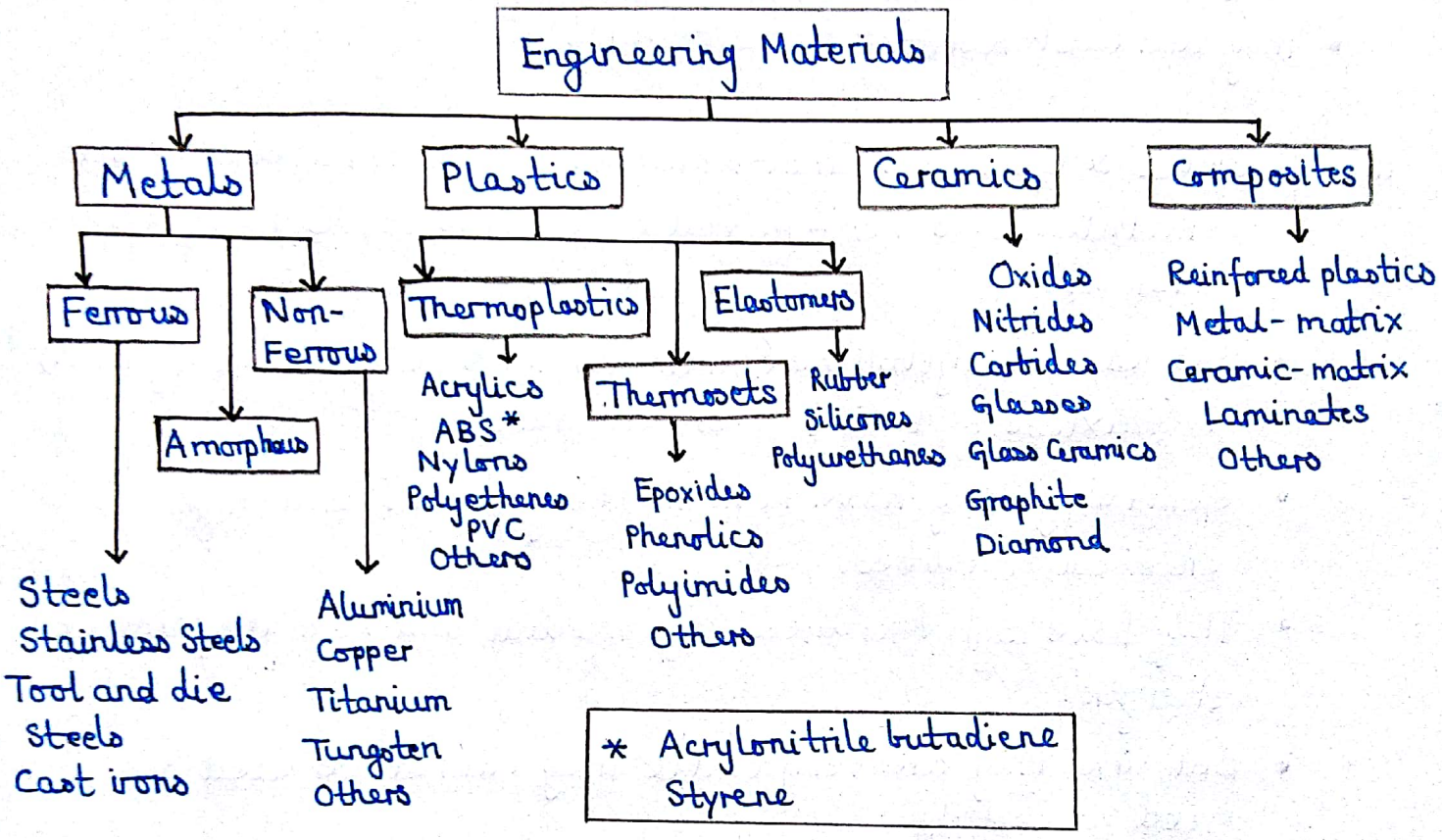

Q2. Explain various characteristic of Properties of Engineering Materials.

(i) Metals & Alloys
(ii) Ceramics & Glasses
(iii) Polymers
(iv) Composites

(i) Metals & Alloys: Inorganic materials composed of one or more metallic elements.

- They usually have a crystalline structure and are good thermal and electrical conductors.

Scanned by CamScanner

- Many metals have high strength and high elastic module
- They maintain their good strength at high and low temperatures.
- They also have sufficient ductility, which is important for many engineering applications.
- They can be strengthened by alloying and heat treatment.
- They are least resistant to corrosion.

(ii) Ceramics & Glasses : Inorganic materials consisting of both metallic and non-metallic elements bonded together chemically

- They can be crystalline (ceramics), non-crystalline (glasses) or mixture of both (glass-ceramics)
- Generally they have high melting points and high chemical stabilities.
- They have high hardness, high moduli and high temperature strength.
- But since they are very brittle they cannot be used as good as metals.
- Ceramics are usually poor electrical conductors
- Ceramics have a high strength on compression.

(iii) Polymers : Organic materials which consist of long molecular chains or networks containing carbon.

- Most polymers are non-crystalline, but some consist of mixture of both crystalline and non-crystalline region.
- They generally have low densities and low-rigidity.
- The mechanical properties may vary considerably.
- Most polymers are poor electrical conductors due to nature of atomic bonding.
- Most of them are corrosion resistant, but cannot be used at high temperatures.
- They generally have a good strength to weight ratio.

Scanned by CamScanner

(iv) Composites: Materials where two or more of the above materials are brought together on macroscopic level.

- Usually they consist of a matrix and a reinforcement
- They are designed to combine the best properties of each of its components.

Q3. Give the composition, mechanical properties at least 5-6 examples of applications of following engineering materials.

A. Cast Iron
(i) Gray C.I
(ii) White C.I
(iii) Nodular C.I
(iv) Malleable C.I

B. Steel
(i) Plain Carbon Steel
(ii) Low Carbon Steel
(iii) Medium Carbon Steel
(iv) High Carbon Steel

C. Stainless Steel
High Speed Steel

D. Copper & Copper Alloys
(i) Brass
(ii) Bronze

E. Aluminium
(i) Duralmin

A. Cast Iron: Carbon generally present from 2.11% to 4%, 0.5 to 3% Si, 0.4 to 1% Mn and few other elements to improve casting properties.

Depending on the form in which carbon is present several type of C.I are obtained

(i) Gray Cast Iron:
Most commonly used
Carbon is present as graphite flakes distributed throughout
When it is fractured, the exposed surface of metal has gray appearance and graphite smudge is obtained on fingers when rubbed across surface.

Scanned by CamScanner

This dispersion of graphite flakes provides good internal lubricating property hence excellent machinability and vibration damping characteristics.

It has poor tensile strength and ductility.

It possesses good compressive strength, wear resistance and corrosion resistance.

It is used for housings where the stiffness of the component is more important than its tensile strength such as Internal combustion Engines, cylinder blocks, pump housings, valve bodies, electrical boxes and decorative castings. Gray cast iron's high thermal conductivity and specific heat capacity are often exploited to make cast iron cookware and disc brake rotors.

(ii) White Cast Iron :

Produced by rapid cooling of molten gray C.I

Carbon remains chemically combined in the form of iron carbide (cementite)

When fractured, it has white shining appearance.

It is hard, brittle and possesses excellent wear resistance

White C.I due to its good hardness and abrasion resistance and relatively low cost finds use in such applications as the wear surfaces (impeller and volute) of slurry pumps, shell liners and lifter bars in ball mills and autogenous grinding mills, balls and rings in coal pulverisers and the teeth of a backhoe's digging bucket.

(iii) Nodular / Ductile Cast Iron :

This is obtained by adding Mg or Cesium (nodulizing agents) to molten Gray CI before pouring.

Scanned by CamScanner

In this the carbon is present in the form of spheroids. It has good ductility, high strength, toughness, wear resistance and excellent casting properties.

Used for water and sewer lines. Nodular CI useful in many automotive components where strength must surpass aluminium but do not necessarily require steel. Other major industrial applications include off-highway diesel trucks, agricultural tractors and oil-well pumps. In wind power industry nodular CI is used for hubs and structural parts like machine frames. Nodular CI is suitable for large and complex shapes and high (fatigue) loads.

(iv) Malleable Cast Iron :

It is obtained by heat treatment of white CI and carbon is present in forms of clusters.

This structure promoted toughness and ductility

It is often used for small castings requiring good tensile strength and ability to flex without breaking (ductility). Uses include electrical fittings, hand tools, pipe fittings, washers, brackets, fence fittings, power line hardware, farm equipments, mining hardware and machine parts.

B. Steels : Carbon 0.02 to 2.11 % other alloying materials like Mn, Cr, Ni, Mo, etc.

Plain Carbon Steels : Other elements 0.4 % Mn, 0.05 % S 0.04 % P. The strength increases with increase in % C but ductility decreases.

(i) Low Carbon Steel :

Less than 0.2 % Carbon

Most common steel known as mild steel, high strength Cold headed fastners and bolts, high volume screw machine parts applications such as shafts, spindles, pins, rods, sprocket assemblies, etc.

Scanned by CamScanner

(ii) Medium Carbon Steel :

0.2 to 0.5 % Carbon

Used where high strength is required like engine components. Used in crankshafts, couplings and cold headed parts. Used in gears, shafts, axles, bolts, studs and machine parts. Used in Screwdivers, pliers, etc.

(iii) High Carbon Steel :

0.5 to 2.11 % Carbon

Higher strength than Medium Carbon Steel and less ductile than Medium Carbon Steel

Used as Aircraft engine mounts and welded tubing applications. Used in gears, aircraft landing gear axles and shaft of power transmissions.

C. Alloy Steels :

(i) Stainless Steels :

Alloy steels designed to provide high corrosion resistance along with high strength and ductility.

Principal alloying element is Cr > 12%

Other alloying elements include Ni, Mo, Ti, Si, Mn, etc.

Culinary Uses :

→ Kitchen Sinks
→ Cutlery
→ Cookware

Surgical tools and Medical Equipments

→ Hemostats
→ Surgical implants
→ Temporary crowns (Dentistry)

Architecture

→ Bridges
→ Monuments & Sculptures
→ Airport Roofs.

Scanned by CamScanner

Automotive and aerospace applications
→ Auto bodies
→ Rail Cars
→ Aircraft

(ii) High Speed Steels :

Highly alloyed steels designed for use as tools and dies in machining and forming processes.

They are designed to provide high strength and toughness and wear resistance at both room and elevated temperatures. In these materials wear resistance and toughness are balanced by various combination of following alloying elements. 18 % Tungsten, 4 % Chromium, 1% Vanadium, 0.7 % Carbon and the rest iron. The addition of 5 - 8% cobalt to HSS imparts higher Strength and wear resistance.

Used for manufacturing of cutting tools : drills, taps, milling cutters, tool bits, gear cutters, saw blades, planer and jointer blades, router bits, etc.

Also used in files, chisels, hand plane blades and damascus kitchen knives and pocket knives.

D. Copper Alloys : Good Conductor of heat & electricity.

(i) Brass :

65 % Cu and 35 % Zn

High conductivity, adequate strength and ductility

Brass is used for decorative purposes. Used in several musical instruments. Used as cookware and for making sculptures.

Scanned by CamScanner

(ii) Bronze :

90% Cu and 10% Tin
Good Strength and Toughness and wear strength and corrosion resistance.
Various kinds of bronze are used in many different industrial applications.

Phosphor Bronze is used for ships' propellers, musical instruments and electrical contacts. Bearings are often made of bronze for its friction properties. It can be filled with oil to make proprietary Oilite and similar material for bearings. Aluminium bronze is very hard and wear-resistant and is used for bearings and machine tool ways. Bronze is also used for making sculptures and medals.

E. Aluminium Alloys :

(i) Duralumin :

Duralumin is 95% aluminium, 3.5-4.5% Copper, 0.7% magnesium and 0.7% manganese and some amount of iron and silicon.

High strength to weight ratio resistance to corrosion, good electrical and thermal conductivity.

Extensively used for aircraft, bus car and marine craft bodies, cooking utensils etc.

Q4. Write short notes on :

(i) Composites
(ii) Super Alloys
(iii) Thermosets
(iv) Thermoplastics

Scanned by CamScanner

(i) Composites :

Heterogenous solids consisting of two or more different materials that are metallurgically or mechanically bonded together.

The combination of materials provides for superior properties as compare to constituents.

These materials possess unique combination of properties such as strength, weight stiffness, corrosion resistance, hardness conductivity etc.

Laminar Or Layer Composites : Plywood, coated tools, insulated wires.

Particulate Composites :

Concrete (cement sand and gravel)

Abrasive particles and matrix in grinding wheels.

Cemented carbides - particle of WC uniformly distributed used as a cutting tool.

Properties are uniform in all direction.

Fibre - reinforced composite :

Thin fibres of one material are embedded in matrix of another material.

Glass is most widely used fibre with polymer as matrix. Other fibres are carbon, boron, etc.

Properties depend upon the fibred material volume fraction of fibre, orientation of fibre, properties of matrix, degree of bonding between fibre and matrix, etc.

Steel reinforced concrete used in construction.

Nylon reinforced tires, glass fibres reinforced plastics for car bodies.

Boron - reinforced components for aircraft & rocket.

Scanned by CamScanner

(ii) Super-Alloys : A super alloy or high-performance alloy is an alloy that exhibits several key characteristics : Excellent Mechanical Strength, Resistance to thermal creep deformation, good surface stability and resistance to corrosion or oxidation. The crystal structure is typically face-centred cubic austenitic. Examples of such alloys are Hastelloy, Inconel, Waspaloy, Rene alloys, Incoloy, MP98T, TMS alloys and CMSX single crystal alloys.

Super alloy development has relied heavily on both chemical and process innovations. Superalloys develop high temperature strength through solid solution strengthening. An important strengthening mechanism is precipitation strengthening which forms secondary phase precipitates such as γ-prime and carbides. Oxidation or corrosion resistance is provided by elements such as aluminium and chromium.

The primary application for such alloys is in turbine engines, both aerospace and marine.

(iii) Thermosets : It is a polymer which becomes irreversibly hardned upon being cured. Curing is caused by the action of heat or suitable radiation and may be promoted by high pressure or the used of a catalyst. It results in extensive cross-linking between polymer chains to give an infusible and insoluble polymer network.

Thermosets are usually malleable or liquid prior to curing and are often designed to be molded into their final shape or used as adhesives. Once hardned a thermoset resin cannot be re-melted in order to be reshaped.

Some examples : Exposides, Phenolics, Polyimides, Bakelite, etc.

They are used as electric appliances and used as adhesives.

Scanned by CamScanner

(iv) Thermoplastics : A thermoplastic is a plastic material, a polymer, that becomes pliable or moldable above a specific temperature and solidifies upon cooling.

Most thermoplastics have a high molecular weight. The polymer chains associate through intermolecular forces, which weaken rapidly with increased temperature, yielding a viscous liquid. Thus, thermoplastics may be reshaped by heating and are typically used to produce parts by various polymer processing techniques such as injection molding, compression molding, calendering and extrusion. Thermoplastics differ from thermosetting polymers, which form irreversible chemical bonds during the curing process.

Examples : Acrylics, Acrylonitrile Butadiene Styrene (ABS), Nylons, Polyethylenes, PVC, etc.

They have several uses depending on type of thermoplastic. Mainly used for making pipes, buckets, bags, brushes, etc.

Q5. Define the following Mechanical Properties

(i) Hardness
(ii) Toughness
(iii) Ductility
(iv) Malleability
(v) Strength
(vi) Elasticity
(vii) Plasticity
(viii) Young's Modulus

Scanned by CamScanner

(i) Hardness : Hardness is measure of the resistance to localized plastic deformation induced by either mechanical indentation or abrasion.

(ii) Toughness : Toughness is the ability of a material to absorb energy and plastically deform without fracturing. It is the amount of energy per unit volume that a material can absorb before rupturing.

(iii) Ductility : Ductility is a measure of a material's ability to undergo significant plastic deformation before rupture, which may be expressed as percent elongation or percent area reduction from a tensile test.

(iv) Malleability : Characteristic of a metal that allows it be bent and twisted into practically any shape without cracking or rupturing and beating / beaten or rolled into very thin sheets is called malleability.

(v) Strength : Strength of material is its ability to withstand an applied load without failure or plastic deformation.

(vi) Elasticity : It is the ability of a body to resist a distorting influence and to return to its original size and shape when that influence or force is removed.

(vii) Plasticity : Plasticity describes the deformation of a material undergoing non-reversible changes of shape in response to applied forces.

(viii) Young's Modulus : It describes tensile elasticity or tendency of an object to deform along an axis when opposing forces are applied along that axis. It is defined as ratio of tensile stress to tensile strain.

$$E = \frac{\sigma}{\epsilon}$$

Scanned by CamScanner

Q6. Write a note on pattern allowance.

A pattern is always made larger than the required size of the casting considering various allowances. These are the allowances which are usually provided in a pattern.

1. Shrinkage or Contraction Allowance :

The various metals used for casting contract after solidification in the mould. Since the contraction is different for different materials, therefore it will also differ with the form or type of metal.

2. Draft or Taper Allowance :

It is a taper which is given to all the vertical walls of the pattern for easy and clean withdraw of the pattern from the sand without damaging the mould cavity. It may be expressed in millimetres on a side or in degrees. The amount of taper varies with the type of patterns. The wooden patterns require more taper than metal patterns because of greater frictional resistance of the wooden surfaces.

3. Finish or Machining Allowance :

The allowance is provided on the pattern if the casting is to be machined. This allowance is given in addition to shrinkage allowance. The amount of this allowance varies from 1.6 to 12.5 mm which depends upon the type of the casting metal, size and the shape of the casting. The ferrous metals require more machining allowance than non-ferrous metals.

Scanned by CamScanner

4. Distortion or Camber Allowance :

This allowance is provided on patterns used for casting of such design in which the contraction is not uniform throughout.

5. Shaking or Rapping Allowance :

This allowance is provided in the pattern to compensate for the rapping of mould because the pattern is to be rapped before removing it from the mould.

Q7. Explain briefly with neat figure, different types of patterns.

1. Single Piece Pattern :

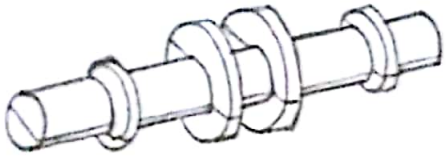

This is simplest type of pattern, exactly like the desired casting. For making a mould, the pattern is accomodated either in cope or drag. Used for producing a few large castings, for example, stuffing box of steam engine.

2. Split Pattern :

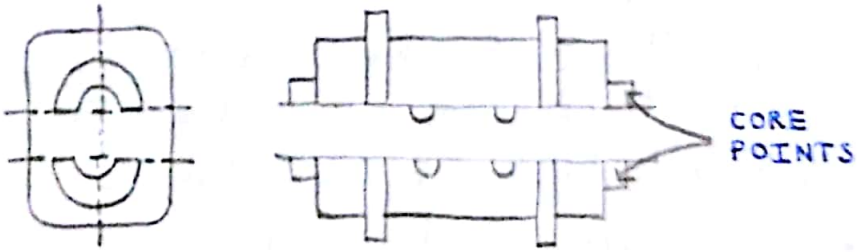

These patterns are split along the parting plane (which may be flat or irregular surface) to facilitate the extraction of the patternout of the mould before the pouring operation. For a more complex casting, the pattern may be split in more than two parts.

Scanned by CamScanner

3. Loose Piece Pattern :

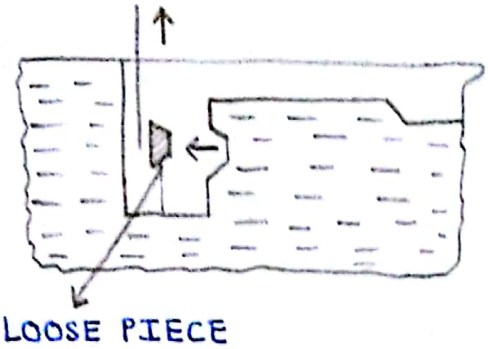

When a one piece solid pattern has projections or back drafts which lie above or below the parting plane, it is impossible to withdraw it from the mould. With such patterns, the projections are made with the help of loose pieces. One drawback of loose pieces is that their shifting is possible during ramming

4. Gated Pattern :

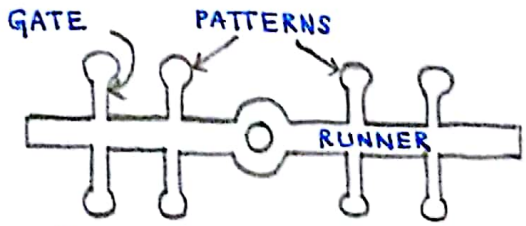

A gated pattern is simply one or more loose patterns having attached gates and runners. Because of their higher cost, these patterns are used for small castings in mass production systems and on moulding machines.

5. Match Plate Pattern :

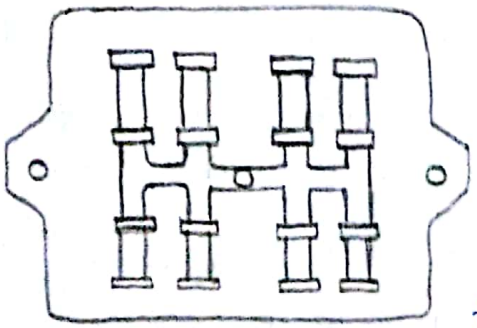

A match plate pattern is a split pattern having the cope and drags portions mounted on opposite sides of a plate (usually metallic), called the "match plate" that conforms to the contour of the parting surface. The gates and runners are also mounted on the match plate, so that very little hardwork is required. This results higher productivity. This type of pattern is used for a large number of castings. Piston rings of I.C engines are produced by this process.

Scanned by CamScanner

6. Sweep Pattern

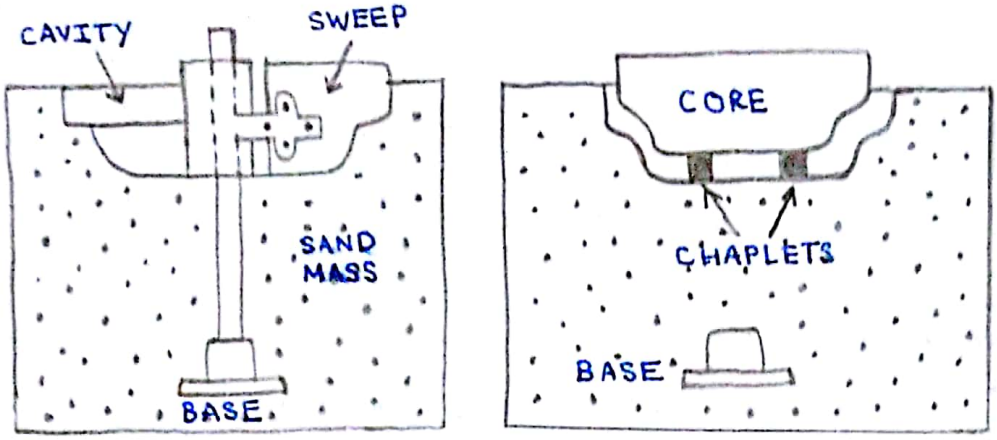

A sweep pattern is a section or board (wooden) of proper contour that is rotated about one edge to shape mould cavities having shapes of rotational symmetry. This type of pattern is used when a casting of large size is to be produced in a short time. Large kettles of C.I are made by sweep patterns.

7. Skeleton Pattern :

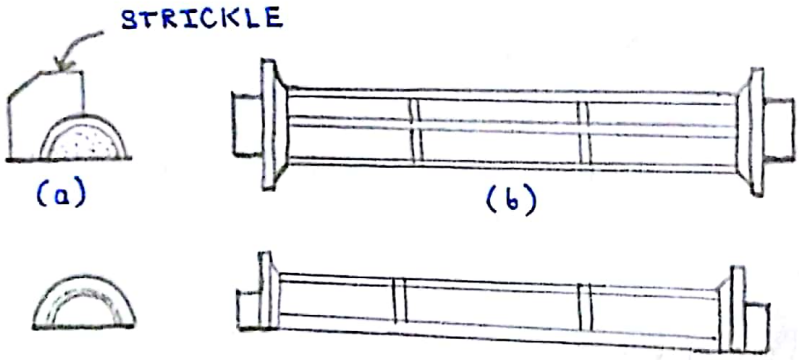

For large castings having simple geometrical shapes, skeleton patterns are used. Just like sweep patterns, these are simple wooden frames that outline the shape of the part to be cast and are also used as guides by the molder in the hand shaping of the mould.

This type of pattern is also used in pit or floor molding process.

Scanned by CamScanner

8. Follow Board Pattern :

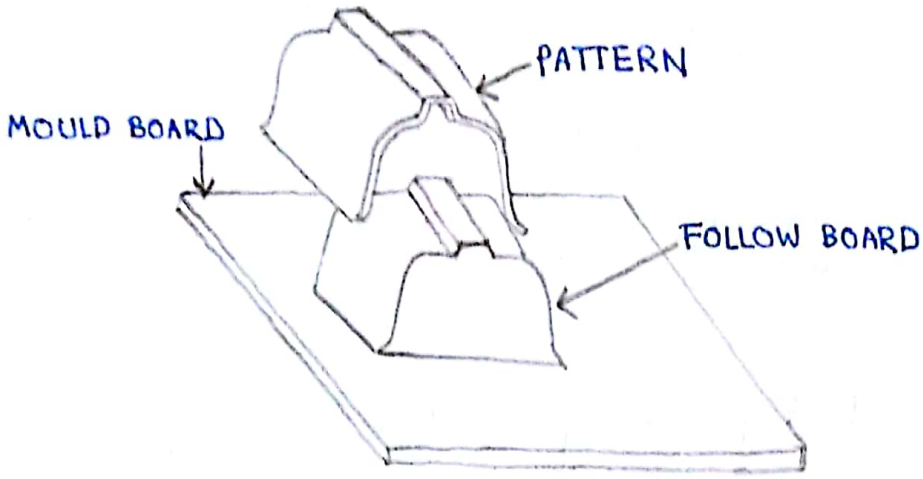

A Follow Board is not a pattern but is a device (wooden board) used for various purposes.

9. Multi-Piece Pattern :

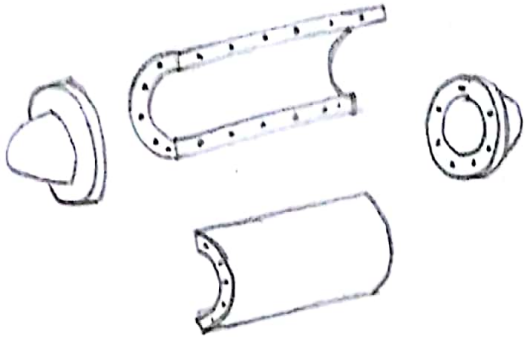

Patterns are made into more than two parts. Facilitates an easy moulding and withdrawl of pattern. Pattern may consist 3, 4 or more numbers depending on designs

APPLICATIONS

- Lap Joint
- Dowel Joint
- Mitre Joint

Scanned by CamScanner

10. Segmental Pattern :

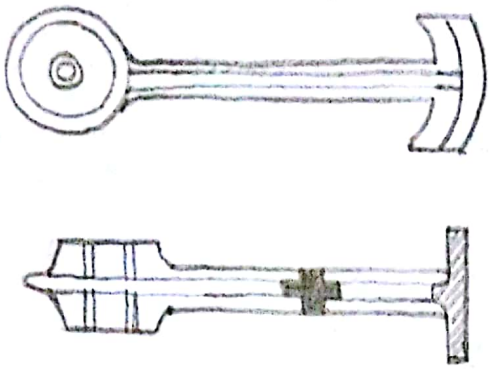

It is used for preparing circular castings. In this type it does not revolve continuously like sweep pattern, instead prepares the mould by parts. It completes one portion of the mould and then moves to next position to make the next part of the mould and so on till the mould is completed.
Used for circular work like rings, gears, wheels, rims, pulleys, etc.

Scanned by CamScanner