CHAPTER - II

X-RAY DIFFRACTION AND RECIPROCAL LATTICE

2.1 INTRODUCTION

X-rays, being electromagnetic radiations, also undergo the phenomenon of diffraction as observed for visible light. However, unlike visible light, x-rays cannot be diffracted by ordinary optical grating because of their very short wavelengths. In 1912, a German physicist Max Von Laue suggested the use of a single crystal to produce diffraction of x-rays. Since all the atoms in a single crystal are regularly arranged with interatomic spacing of the order of a few angstroms, a crystal can act as a three-dimensional natural grating for x-rays. Friedrich and Knipping later successfully demonstrated the diffraction of x-rays from a thin single crystal of zinc blende (ZnS). The diffraction pattern obtained on a photographic film consisted of a series of dark spots arranged in a definite order. Such a pattern is called the *Laue's pattern* and reflects the symmetry of the crystal. Apart from this, the phenomenon of x-ray diffraction has become an invaluable tool to determine the structures of single crystals and polycrystalline materials. It is also extensively used to determine the wavelength of x-rays.

2.2 X-RAY DIFFRACTION

When an atomic electron is irradiated by a beam of monochromatic x-rays, it starts vibrating with a frequency equal to that of the incident beam. Since an accelerating charge emits radiations, the vibrating electrons present inside a crystal become sources of secondary radiations having the same frequency as the incident x-rays. These secondary x-rays spread out in all possible directions. The phenomenon may also be regarded as scattering of x-rays by atomic electrons. If the wavelength of incident radiations is quite large compared with the atomic dimensions, all the radiations emitted by electrons shall be in phase with one another. The incident x-rays, however, have the same order of wavelength as that of the atomic dimensions; hence the radiations emitted by electrons are, in general, out of phase with one another. These radiations may, therefore, undergo constructive or destructive interference producing maxima or minima in certain directions.

Consider a one-dimensional row of similar atoms having interatomic spacing equal to a. Let a wave front of x-rays of wavelength λ be incident on the row of atoms such that the wave crests are parallel to the row. The atoms emit secondary wavelets which travel in all possible directions. As shown in Fig. 2.1, the reinforcement of secondary wavelets takes place not only in a direction perpendicular to the row of atoms but also in other directions. These directions correspond to different orders of x-ray diffraction. The zeroth, first and second order diffraction directions are shown in Fig. 2.1. It may be noted that reinforcement takes place in some particular directions only, whereas in other directions the wave fronts interfere destructively and the intensity is minimum. Such reinforcements produce Laue's pattern.

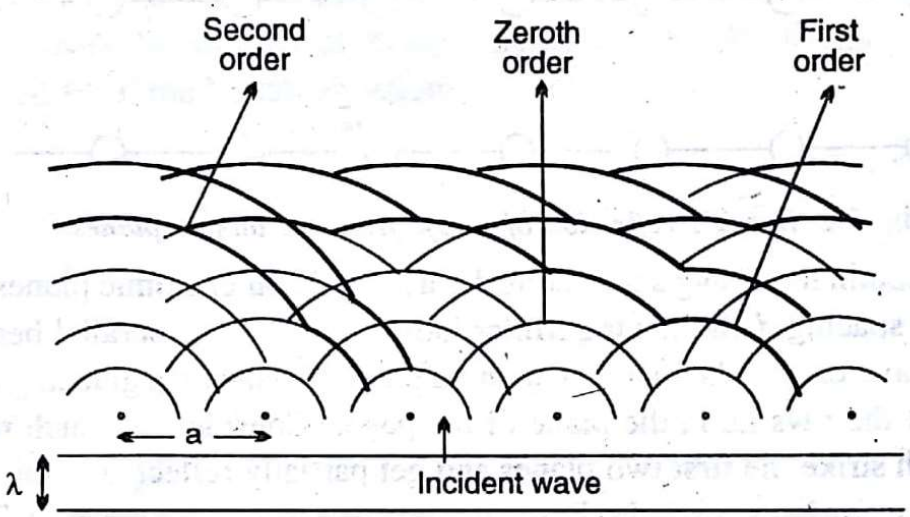

Fig. 2.1. *Reinforcement of scattered waves resulting in diffracted beams of different orders.*

In actual crystals, the problem is more complicated because of the presence of three-dimensional arrangement of atoms. The conditions for a crystal to diffract x-rays can be determined by using either *Bragg's treatment* or *Von Laue's treatment.*

2.2.1 The Bragg's Treatment : Bragg's Law

In 1912, W.H. Bragg and W.L. Bragg put forward a model which generates the conditions for diffraction in a very simple way. They pointed that a crystal may be divided into various sets of parallel planes. The directions of diffraction lines can then be accounted for if x-rays are considered to be reflected by such a set of parallel atomic planes followed by the constructive interference of the resulting reflected rays. Thus the problem of diffraction of x-rays by the atoms was converted into the problem of reflection of x-rays by the parallel atomic planes. Hence the words 'diffraction' and 'reflection' are mutually interchangeable in Bragg's treatment. Based on these considerations, Braggs derived a simple mathematical

relationship which serves as a condition for the Bragg reflection to occur. This condition is known as the Bragg's law.

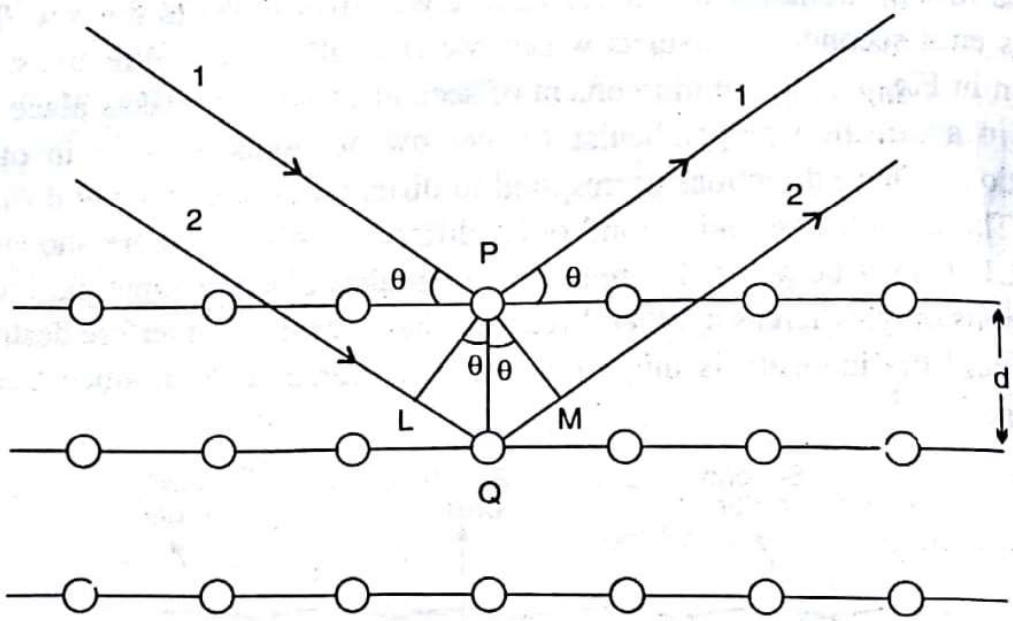

Fig. 2.2. *Bragg's reflection of x-rays from the atomic planes.*

To obtain the Bragg's law, consider a set of parallel atomic planes with interplanar spacing d and having Miller indices (hkl). Let a parallel beam of x-rays of wavelength λ be incident on these parallel planes at a glancing angle θ such that the rays lie in the plane of the paper. Consider two such rays 1 and 2 which strike the first two planes and get partially reflected at the same angle θ in accordance with the Bragg's treatment as shown in Fig. 2.2. The diffraction is the consequence of constructive interference of these reflected rays. Let PL and PM be the perpendiculars drawn from the point P on the incident and reflected portions of ray 2 respectively. The path difference between rays 1 and 2 is, therefore, given by (LQ + QM). Since LQ = QM = $d \sin\theta$, we get

$$\text{Path difference} = 2d \sin\theta$$

For constructive interference of rays 1 and 2, the path difference must be an integral multiple of wavelength λ, i.e.,

$$2d \sin\theta = n\lambda \tag{2.1}$$

where n is an integer. This equation is called the *Bragg's law*. The diffraction takes place for those values of d, θ, λ and n which satisfy the Bragg's condition. In Eq. (2.1), n represents the order of reflection. For $n = 0$, we get the zeroth order reflection which occurs for θ equal to zero, i.e., in the direction of the incident beam and hence it cannot be observed experimentally. For the given values of d and λ, the higher order reflections appear for larger values of θ. The diffraction lines appearing for $n = 1$, 2 and 3 are called first, second and third order diffraction lines respectively and so

on. The intensity of the reflected lines decreases with increase in the value of n or θ. The highest possible order is determined by the condition that $\sin\theta$ cannot exceed unity. Also, since $\sin\theta \leq 1$, λ must be $\leq d$ for Bragg reflection to occur. Taking $d \approx 10^{-10}$ m, we obtain $\lambda \leq 10^{-10}$ m or 1Å. X-rays having wavelength in this range are, therefore, preferred for analysis of crystal structures.

2.2.2 The Von Laue Treatment : Laue's Equations

Von Laue treated the phenomenon of diffraction in a more general way by considering the scattering of x-rays from individual atoms in the crystal followed by their recombination to obtain the directions of diffraction maxima. It will be shown below that diffraction maxima appear in some specific directions which obey certain conditions known as the *Laue's equations*. It also proves the validity of Bragg's treatment and the Bragg's law can be derived from the Laue's equations.

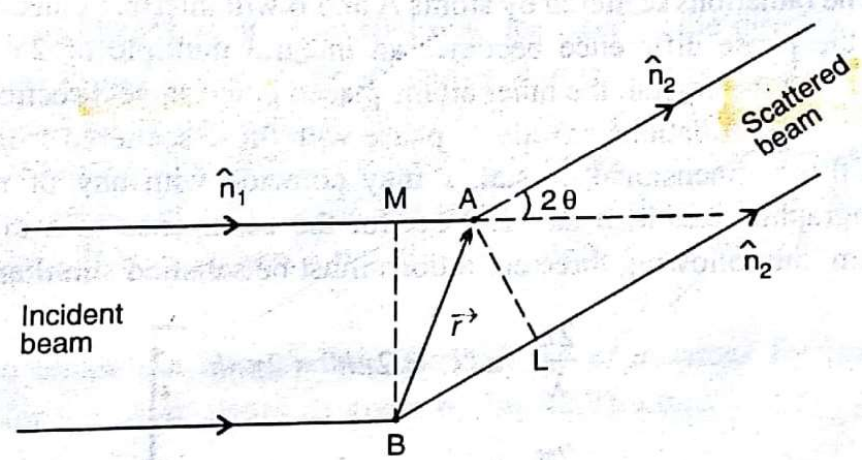

Fig. 2.3. *Scattering of x-rays from two identical scattering centres separated by a distance* **r**.

Consider the scattering of an incident beam from two identical scattering centres A and B placed at a distance r from each other in a crystal as shown in Fig. 2.3. Let $\hat{\mathbf{n}}_1$ and $\hat{\mathbf{n}}_2$ be the unit vectors in the directions of the incident and scattered beams respectively and let the angle between $\hat{\mathbf{n}}_1$ and $\hat{\mathbf{n}}_2$ be 2θ. Draw BM and AL perpendiculars to the directions of the incident and scattered beams respectively. Then the path difference between the rays scattered from A and B is given by

$$\text{Path difference} = AM - BL = \mathbf{r}.\hat{\mathbf{n}}_1 - \mathbf{r}.\hat{\mathbf{n}}_2 = \mathbf{r}.\,(\hat{\mathbf{n}}_1 - \hat{\mathbf{n}}_2) = \mathbf{r}.\mathbf{N}$$

where $\mathbf{N} = \hat{\mathbf{n}}_1 - \hat{\mathbf{n}}_2$. As will be seen later, the vector **N** happens to be a normal to the reflecting plane. It is a plane which may be assumed to be reflecting the incident ray into the direction of the scattered ray following the ordinary laws of reflection. This is one of the planes which forms the basis of Bragg's treatment. From Fig. 2.4, we find

$|\mathbf{N}| = 2 \sin\theta$

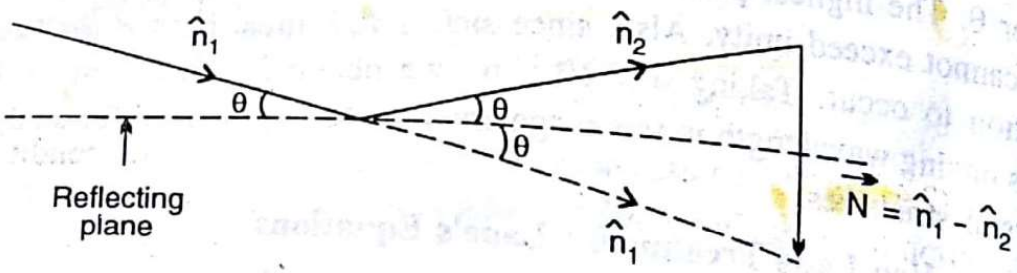

Fig. 2.4. *Geometrical relationship of incident beam, scattered beam, reflecting plane and the normal.*

The phase difference between the rays scattered from A and B is

$$\phi = \frac{2\pi}{\lambda} (\mathbf{r}.\mathbf{N}) \tag{2.2}$$

The radiations scattered by atoms A and B will interfere constructively only if the phase difference becomes an integral multiple of 2π. Due to periodicity of the crystal, the other atoms placed in the same direction would also scatter the radiations exactly in phase with those scattered from A and B. In a three-dimensional crystal, **r** may coincide with any of the three crystallographic axes **a**, **b** and **c**. Thus for the occurrence of a diffraction maximum, the following three conditions must be satisfied simultaneously :

$$\left.\begin{aligned} \frac{2\pi}{\lambda} (\mathbf{a}.\mathbf{N}) &= 2\pi h' = 2\pi n h \\ \frac{2\pi}{\lambda} (\mathbf{b}.\mathbf{N}) &= 2\pi k' = 2\pi n k \\ \frac{2\pi}{\lambda} (\mathbf{c}.\mathbf{N}) &= 2\pi l' = 2\pi n l \end{aligned}\right] \tag{2.3}$$

where h', k' and l' represent any three integers. While obtaining Eqs. (2.3), it is assumed that atoms A and B are the nearest neighbours and, so, the magnitudes a, b and c represent the interatomic distances along their respective crystallographic directions. The integers h', k' and l' and h, k, l differ only by a common factor n which may be equal to or greater than unity. Thus the integers h, k and l cannot have a common factor other than unity and resemble the Miller indices of a plane which happens to be the reflecting plane. Let α, β and γ be the angles between the scattering normal **N** and the crystallographic axes **a**, **b** and **c** respectively. Then,

$$\mathbf{a}.\mathbf{N} = aN \cos\alpha = 2\, a \sin\theta \cos\alpha, \text{ and so on.}$$

Therefore, Eqs. (2.3) become

$$\left.\begin{aligned} \mathbf{a}.\mathbf{N} &= 2a \sin\theta \cos\alpha = h'\lambda = nh\lambda \\ \mathbf{b}.\mathbf{N} &= 2b \sin\theta \cos\beta = k'\lambda = nk\lambda \\ \mathbf{c}.\mathbf{N} &= 2c \sin\theta \cos\gamma = l'\lambda = nl\lambda \end{aligned}\right] \tag{2.4}$$

Equations (2.4) are known as *Laue's equations* and represent the conditions for diffraction to occur. In an orthogonal coordinate system, α, β and γ also satisfy the condition

$$\cos^2\alpha + \cos^2\beta + \cos^2\gamma = 1 \tag{2.5}$$

where $\cos\alpha$, $\cos\beta$ and $\cos\gamma$ represent the direction cosines of the scattering normal. The Eqs. (2.4) and (2.5) yield the values of α, β, γ and θ for which diffraction takes place provided h, k, l and n are known.Thus, for a given reflecting plane, Eqs. (2.4) serve to determine unique values of θ and **N** which define a scattering direction.

From Eqs. (2.4), we also find that, for fixed θ, the direction cosines $\cos\alpha$, $\cos\beta$ and $\cos\gamma$ of the scattering normal are proportional to h/a, k/b and l/c. Also, as described in Sec. 1.9, the direction cosines of the normal to any arbitrary plane (hkl) are proportional to h/a, k/b and l/c. This leads to the conclusion that the scattering normal **N** is the same as the normal to the plane (hkl) and hence the arbitrary plane (hkl) happens to be the reflecting plane.

To obtain the Bragg's law, consider the expressions for interplanar spacing for the (hkl) planes as given by Eq. (1.7), i.e.,

$$d = \frac{a}{h}\cos\alpha = \frac{b}{k}\cos\beta = \frac{c}{l}\cos\gamma$$

In combination with Eqs. (2.4), these yield

$$2d \sin\theta = n\lambda$$

which is the Bragg's law. Here n represents the order of reflection and, as described above, is the greatest common factor among the integers h', k' and l' in Eqs. (2.4). Thus one may have the planes (hkl) and consider different orders of reflection from these; alternatively, one may have the planes $(nh\ nk\ nl)$ or $(h'k'l')$ and always consider the first order reflection. The latter practice is normally adopted during the process of structure determination by x-ray diffraction. It is obvious that the nth order reflection from the planes (hkl) would overlap with the first order reflection from the planes $(nh\ nk\ nl)$ or $(h'k'l')$. Thus, putting n equal to 1, one can get rid of the factor n in the Bragg's equation provided the reflections from all the planes, real or imaginary, having Miller indices with or without a common factor be considered.

2.3 X-RAY DIFFRACTION METHODS

The phenomenon of x-ray diffraction is employed to determine the structure of solids as well as for the study of x-ray spectroscopy. The underlying principle in both the cases is the Bragg's law as given by Eq. (2.1). Considering only the first order reflections from all the possible atomic planes, real or fictitious, the Bragg's law may be written as

$$2d \sin \theta = \lambda \tag{2.6}$$

The reflections take place for those values of d, θ and λ which satisfy the above equation. For structural analysis, x-rays of known wavelength are employed and the angles for which reflections take place are determined experimentally. The d values corresponding to these reflections are then obtained from Eq. (2.6). Using this information, one can proceed to determine the size of the unit cell and the distribution of atoms within the unit cell. In the x-ray spectroscopy, x-rays are incident on a particular cleavage surface of a single crystal so that the interplanar spacing d is known. The angle for which reflections take place are determined experimentally. The wavelength λ of the incident x-rays is then obtained from Eq. (2.6).

It may be noted that the x-rays used for diffraction purposes should have wavelength which is the most appropriate for producing diffraction effects. Since $\sin\theta$ should be less than unity, Eq. (2.6) yields

$$\lambda < 2d$$

Normally,

$$d \sim 3 \text{ Å}$$

$$\therefore \quad \lambda < 6 \text{ Å}$$

Longer wavelength x-rays are unable to resolve the details of the structure on the atomic scale whereas shorter wavelength x-rays are diffracted through angles which are too small to be measured experimentally.

In x-ray diffraction studies, the probability that the atomic planes with right orientations are exposed to x-rays is increased by adopting one of the following methods:

(i) A single crystal is held stationary and a beam of white radiations is inclined on it at a fixed glancing angle θ, i.e., θ is fixed while λ varies. Different wavelengths present in the white radiations select the appropriate reflecting planes out of the numerous present in the crystal such that the Bragg's condition is satisfied. This technique is called the *Laue's technique*.

(ii) A single crystal is held in the path of monochromatic radiations

and is rotated about an axis, i.e., λ is fixed while θ varies. Different sets of parallel atomic planes are exposed to incident radiations for different values of θ and reflections take place from those atomic planes for which d and θ satisfy the Bragg's law. This method is known as the *rotating crystal method.*

(iii) The sample in the powdered form is placed in the path of monochromatic x-rays, i.e., λ is fixed while both θ and d vary. Thus a number of small crystallites with different orientations are exposed to x-rays. The reflections take place for those values of d, θ and λ which satisfy the Bragg's law. This method is called the *powder method.*

2.3.1 The Laue's Method

An experimental arrangement used to produce *Laue's patterns* is shown in Fig. 2.5. It consists of a flat plate camera which contains a collimator with a fine hole to obtain a very fine beam of x-rays. The sample is placed on a goniometer which can be rotated to change the orientation of the single crystal. Two flat photographic films are used, one for receiving the transmitted diffracted beam and the other for receiving the reflected diffracted beam for back reflection experiments. Such experiments are performed particularly when there is excessive absorption of x-rays in the crystal.

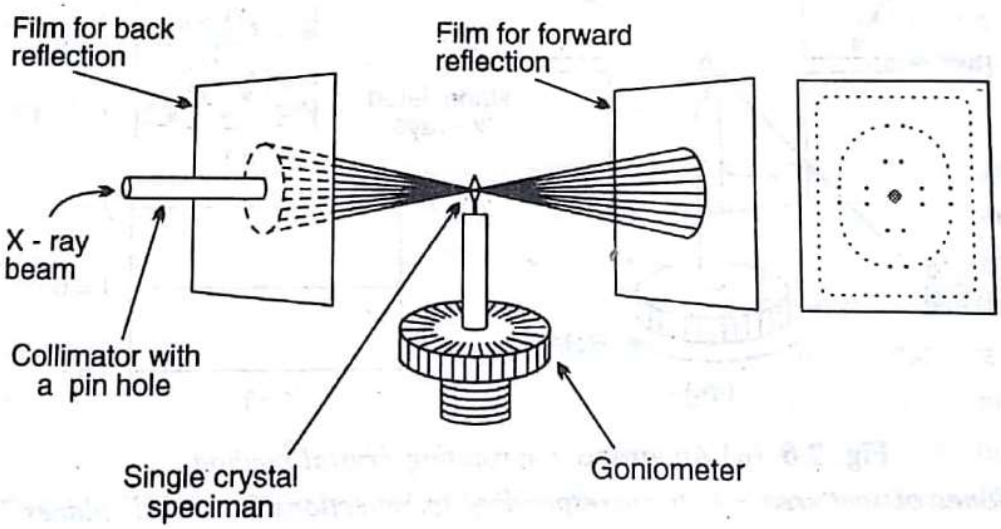

Fig. 2.5. *A flat plate camera used in Laue's diffraction method.*

Initially, a single crystal specimen having dimensions of the order of 1mm × 1mm × 1mm is held stationary in the path of white x-rays having wavelengths ranging from 0.2 to 2 Å. Since the crystal contains a number of sets of parallel atomic planes with different interplanar spacings, diffraction is possible for certain values of λ and d which satisfy the Bragg's condition. Thus diffraction spots are produced on the photographic films as shown in Fig. 2.5. The crystal can be rotated with the help of goniometer to change its orientation with respect to the incident beam. By doing so, the

diffraction condition may be satisfied for a new set of atomic planes and hence a different type of pattern may be obtained on the photographic film. The symmetry of the crystal is, however, reflected in each pattern.

The Laue's method is mostly used to determine the crystal symmetry. For example, if a crystal having four-fold axial symmetry is oriented so that its axis is parallel to the beam, the resulting Laue's pattern also exhibits the four-fold symmetry. The symmetry of the pattern helps to determine the shape of the unit cell. It is, however, not practicable to determine the structure of the crystal by this method. It is because a number of wavelengths may be reflected from a single plane in different orders and may superpose at a single point resulting in the loss of a number of reflections. The symmetry of the Laue's pattern also helps to orient the crystals for various solid state experiments. Another application of the Laue's method is the determination of imperfections or strains in the crystal. An imperfect or strained crystal has atomic planes which are not exactly plane but are slightly curved. Thus instead of sharp diffraction spots one gets streaks in the Laue's pattern. This type of streaking on Laue's photographs is called *asterism*.

2.3.2 Rotating Crystal Method

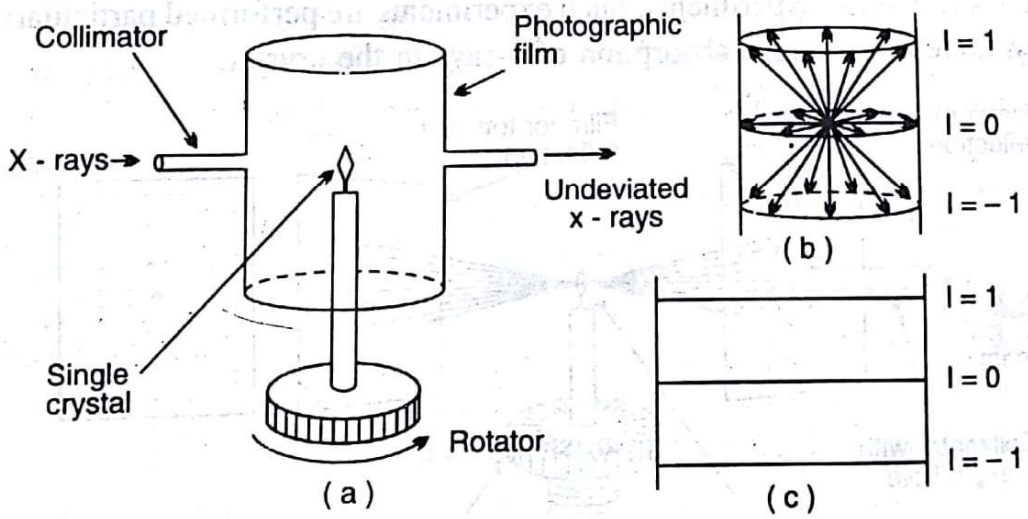

Fig. 2.6. *(a) Apparatus for rotating crystal method*
(b) Cones of scattered x-rays corresponding to reflections from (hkl) planes.
(c) Layer lines produced after flattening the photographic film.

In this method, a monochromatic beam of x-rays is incident on a single crystal mounted on a rotating spindle such that one of its crystallographic axes coincides with the axis of rotation which is kept perpendicular to the direction of the incident beam. The single crystal having dimensions of the order of 1mm is positioned at the centre of a cylindrical holder concentric with the rotating spindle as shown in Fig. 2.6. A photographic film is attached at the inner circular surface of the cylinder.

The diffraction takes place from those planes which satisfy the Bragg's law for a particular angle of rotation. The planes parallel to the axis of rotation diffract the incident rays in a horizontal plane. However, reflections cannot be observed for those planes which always contain the incident beam. The planes inclined to the rotation axis produce reflections above or below the horizontal plane depending upon the angle of inclination. The horizontal lines produced by diffraction spots on the photographic film are called *layer lines*. If the crystal is positioned such that its **c**-axis coincides with the axis of rotation, all the planes with Miller indices of the type ($hk0$) will produce the central layer line. Likewise, the planes having Miller indices of the type ($hk1$) and ($hk\bar{1}$) will produce the layer lines above and below the central line respectively, and so on. These layer lines are shown in Fig. 2.6c. The vertical spacing between the layer lines depends on the distance between the lattice points along the **c**-axis. Hence the distance **c** can be measured from the photographic film. Similarly, one can determine the translation vectors **a** and **b** on mounting the crystal along **a** and **b** axes respectively. Thus the dimensions of the unit cell can be easily determined.

2.3.3 Powder Method

This is the most widely used diffraction method to determine the structure of crystalline solids. The sample used is in the form of a fine powder containing a large number of tiny crystallites with random orientations. It is prepared by crushing the commonly available polycrystalline material, thus eliminating the tedious process of growing the single crystals.

The experimental arrangement used to produce diffraction is shown in Fig. 2.7. It consists of a cylindrical camera, called the Debye-Scherrer camera, whose length is small as compared to the diameter. The finely powdered sample is filled in a thin capillary tube or is simply pasted on a wire by means of a binder and mounted at the centre of the camera. The capillary tube or wire and the binder should be of a non-diffracting material. A collimated beam of monochromatic x-rays is produced by passing the x-rays through a filter and a collimator. The x-rays enter the camera through the collimator and strike the powdered sample. Since the specimen contains a large number of small crystallites ($\sim 10^{12}$ in $1 mm^3$ of powder sample) with random orientations, almost all the possible θ and d values are available. The diffraction takes place for those values of d and θ which satisfy the Bragg's condition, i.e., $2d \sin\theta = n\lambda$, λ being a constant in this case. Also, since for a particular value of the angle of incidence θ, numerous orientations of a particular set of planes are possible, the diffracted rays corresponding to fixed values of θ and d lie on the surface of a cone with its apex at the sample and the semivertical angle equal to 2θ. Different cones are observed for different sets of d and θ for a particular value of n, and also for different combinations

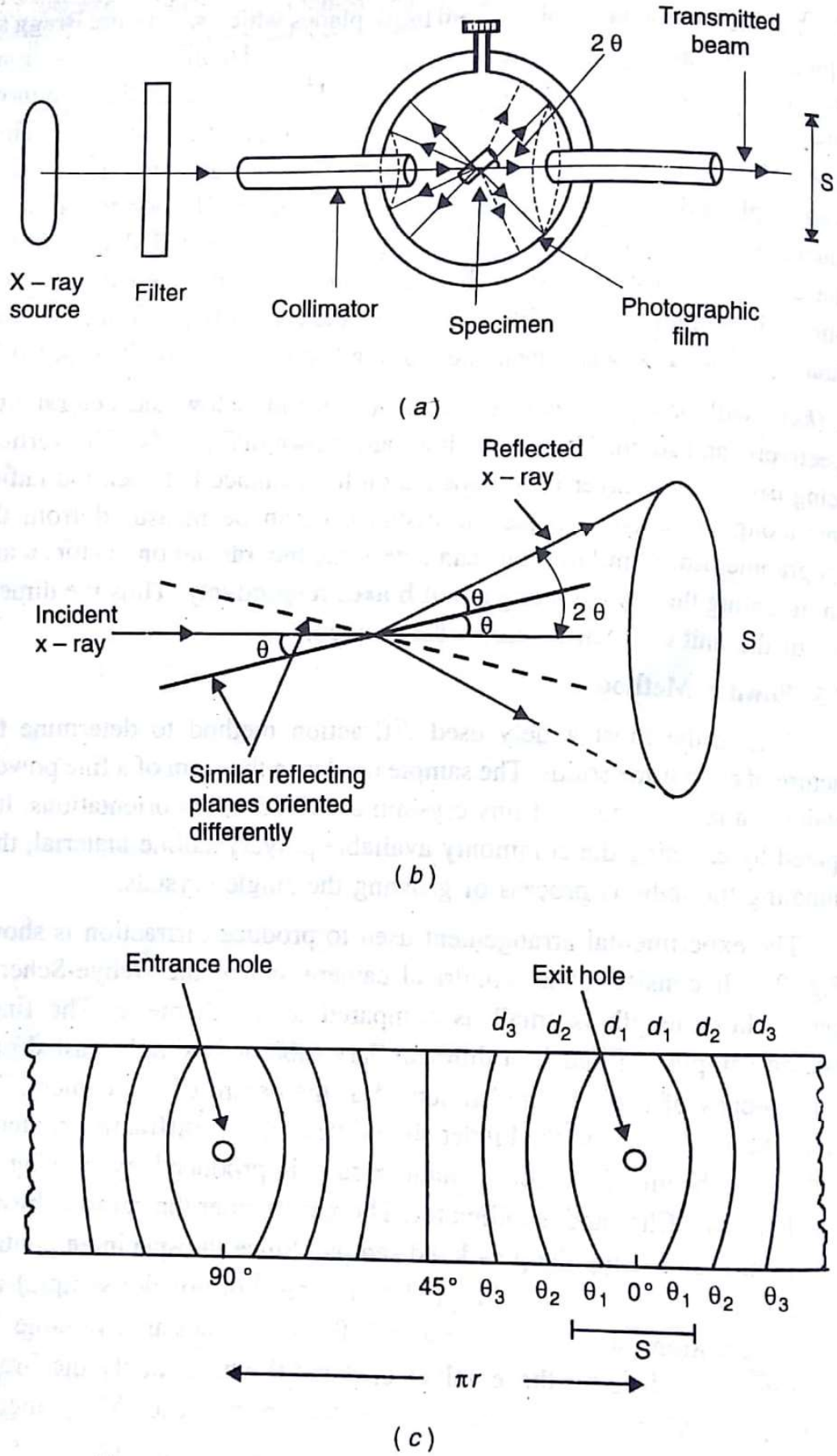

Fig. 2.7. *(a) Front view of the Debye-Scherrer Camera.*
(b) A cone produced by reflection of x-rays from identical planes having different orientations.
(c) Flattened photographic film after developing and indexing of diffraction lines.

of θ and n for a particular value of d. The transmitted x-rays move out of the camera through an exit hole located diametrically opposite to the entrance hole. A photographic film is attached to the inner side of the curved surface of the camera. Each cone of the reflected beam leaves two impressions on the film which are in the form of arcs on either side of the exit hole with their centres coinciding with the hole. Similarly, cones produced by back-reflected x-rays produce arcs on either side of the entrance hole. If the sample consists of coarse grains rather than fine particles, a spotty diffraction pattern may be obtained. This is because a sufficient number of crystallites with all possible orientations may not be available in a coarse-grained sample. In such a case, the sample has to be rotated to obtain almost continuous diffraction arcs. The film is exposed for a long time (~ a few hours) in order to obtain reflected lines of sufficiently high intensity. It is then removed from the camera and developed. The arcs produced by reflected rays appear dark on the developed film. The angle θ corresponding to a particular pair of arcs is related to the distance S between the arcs as

$$4\theta \text{ (radians)} = S/R \tag{2.7}$$

where R is the radius of the camera. If θ is measured in degrees, the above equation is modified as

$$4\theta \text{ (degrees)} = \frac{57.296S}{R} \tag{2.8}$$

The calculations can be made simpler by taking the radius of the camera in multiples of 57.296. For example, taking R = 57.296 mm, we get

$$\theta \text{ (degrees)} = S \text{ (mm)}/4 \tag{2.9}$$

Thus one-fourth of the distance between the corresponding arcs of a particular pair in mm is a measure of the angle θ in degrees. Knowing all the possible θ's and considering only the first order reflections from all the possible planes, Eq. (2.6) is used to calculate the interplanar spacing for various sets of parallel planes which contribute to these reflections. Thus, we have

$$d = \lambda / (2 \sin\theta)$$

These d values are used to determine the space lattice of the crystal structure.

In modern x-ray diffractometers, the photographic film is replaced by a radiation detector, such as ionization chamber or scintillation detector, which records the positions and relative intensities of the various reflected lines as a function of the angle 2θ. The detector is mounted on a goniometer and is capable of rotation about the sample at different speeds. The whole system is computerised. The availability of a lot of software makes the system versatile.

2.4 RECIPROCAL LATTICE

As described earlier, the diffraction of x-rays occurs from various sets of parallel planes having different orientations (slopes) and interplanar spacings. In certain situations involving the presence of a number of sets of parallel planes with different orientations, it becomes difficult to visualize all such planes because of their two-dimensional nature. The problem was simplified by P.P. Ewald by developing a new type of lattice known as the *reciprocal lattice*. The idea underlying the development was that each set of parallel planes could be represented by a normal to these planes having length equal to the reciprocal of the interplanar spacing. Thus the direction of each normal represents the orientation of the corresponding set of parallel planes and its length is proportional to the reciprocal of the interplanar spacing.

The normals are drawn with reference to an arbitrary origin and points are marked at their ends. These points form a regular arrangement which is called a reciprocal lattice. Obviously, each point in a reciprocal lattice is a representative point of a particular parallel set of planes and it becomes easier to deal with such points than with sets of planes.

A reciprocal lattice to a direct lattice is constructed using the following procedure :

(a) Take origin at some arbitrary point and draw normals to every set of parallel planes of the direct lattice.

(b) Take length of each normal equal to the reciprocal of the interplanar spacing for the corresponding set of planes. The terminal points of these normals form the reciprocal lattice.

Consider, for example, a unit cell of monoclinic crystal in which $a \neq b \neq c$, $\alpha = \gamma = 90°$ and $\beta > 90°$ as shown in Fig. 2.8. For simplicity, we orient the unit cell in such a way that the **b**-axis is perpendicular to the plane of the paper; hence **a** and **c**-axes lie in the plane of the paper as shown in Fig. 2.9.

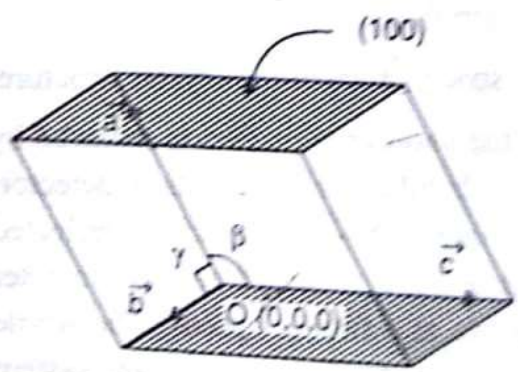

Fig. 2.8. *Unit cell of a monoclinic crystal.*

Consider planes of the type (*h0l*) which are parallel to **b**-axis, i.e., perpendicular to the plane of the paper. Hence normal to these planes lie in the plane of the paper. The planes (*h01*), being perpendicular to the plane of the paper, are represented by lines. Thus the line (101) in fact means the plane (101), and so on. Taking the point of intersection of the three axes as the origin, normals are drawn to the

planes (*h0l*) and their lengths are taken to be $1/d_{h0l}$, where d_{h0l} is the interplanar spacing for the planes (*h0l*). For example, since the planes (200) have half the interplanar spacing as compared to the plane (100), the reciprocal lattice point (200) is twice as far away as point (100) from the origin. If normals to all the (*hkl*) planes are drawn, a three-dimensional reciprocal lattice is obtained.

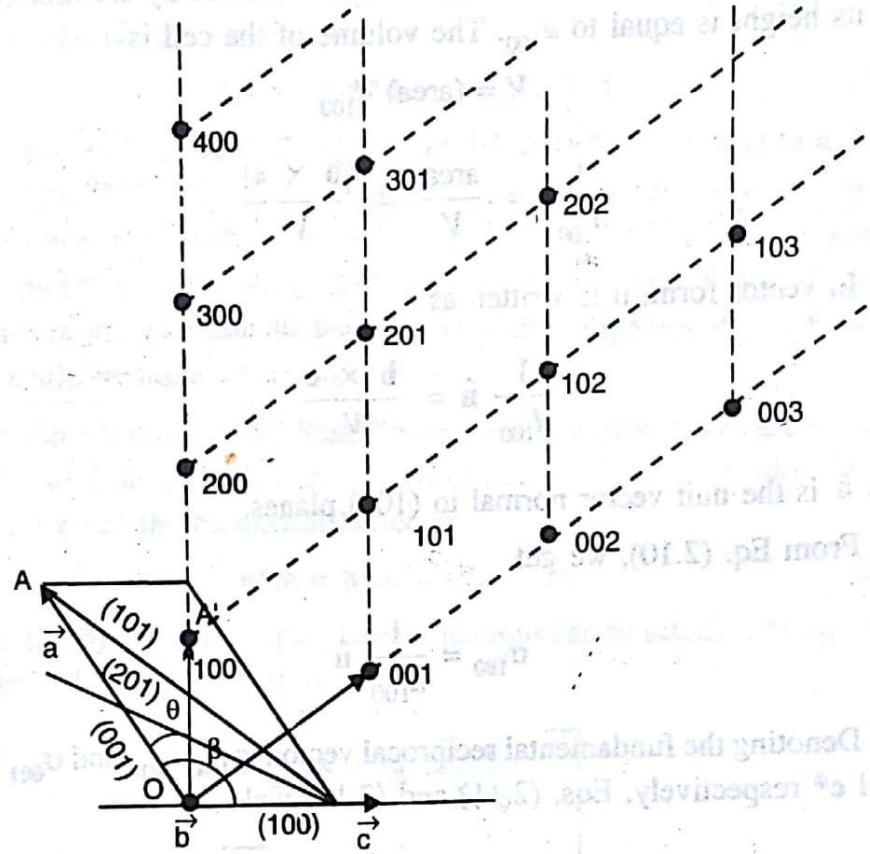

Fig. 2.9. *Two-dimensional reciprocal lattice to a monoclinic lattice. The* **b**-*axis is perpendicular to the plane of the paper.*

2.4.1 Reciprocal Lattice Vectors

A *reciprocal lattice vector*, σ_{hkl}, is defined as a vector having magnitude equal to the reciprocal of the interplanar spacing d_{hkl} and direction coinciding with normal to the (*hkl*) planes. Thus, we have

$$\sigma_{hkl} = \frac{1}{d_{hkl}} \hat{\mathbf{n}} \tag{2.10}$$

where $\hat{\mathbf{n}}$ is the unit vector normal to the (*hkl*) planes. In fact, a vector drawn from the origin to any point in the reciprocal lattice is a reciprocal lattice vector.

Like a direct lattice, a reciprocal lattice also has a unit cell which is of the form of a parallelopiped. The unit cell is formed by the shortest

normals along the three directions, i.e., along the normals to the planes (100), (010) and (001). These normals produce reciprocal lattice vectors designated as σ_{100}, σ_{010} and σ_{001} which represent the *fundamental reciprocal lattice vectors.*

Let **a**, **b** and **c** be the primitive translation vectors of the direct lattice as shown in Fig. 2.8. The base of the unit cell is formed by the vectors **b** and **c** and its height is equal to d_{100}. The volume of the cell is

$$V = (\text{area})\, d_{100}$$

or

$$\frac{1}{d_{100}} = \frac{\text{area}}{V} = \frac{|\mathbf{b} \times \mathbf{c}|}{V}$$

In vector form, it is written as

$$\frac{1}{d_{100}}\,\hat{\mathbf{n}} = \frac{\mathbf{b} \times \mathbf{c}}{V} \tag{2.11}$$

where $\hat{\mathbf{n}}$ is the unit vector normal to (100) planes.

From Eq. (2.10), we get

$$\sigma_{100} = \frac{1}{d_{100}}\,\hat{\mathbf{n}} \tag{2.12}$$

Denoting the fundamental reciprocal vectors σ_{100}, σ_{010} and σ_{001} by **a***, **b*** and **c*** respectively, Eqs. (2.11) and (2.12) yield

$$\left.\begin{aligned} \mathbf{a}^* = \sigma_{100} &= \frac{\mathbf{b}\times\mathbf{c}}{\mathbf{a}.\mathbf{b}\times\mathbf{c}} \\ \text{Similarly,}\quad \mathbf{b}^* = \sigma_{010} &= \frac{\mathbf{c}\times\mathbf{a}}{\mathbf{a}.\mathbf{b}\times\mathbf{c}} \\ \text{and}\quad \mathbf{c}^* = \sigma_{001} &= \frac{\mathbf{a}\times\mathbf{b}}{\mathbf{a}.\mathbf{b}\times\mathbf{c}} \end{aligned}\right] \tag{2.13}$$

where $\mathbf{a}.\mathbf{b}\times\mathbf{c} = \mathbf{b}.\mathbf{c}\times\mathbf{a} = \mathbf{c}.\mathbf{a}\times\mathbf{b}$ is the volume of the direct cell. Thus the reciprocal translation vectors bear a simple relationship to the crystal translation vectors as

$$\left.\begin{aligned} &\mathbf{a}^* \text{ is normal to } \mathbf{b} \text{ and } \mathbf{c} \\ &\mathbf{b}^* \text{ is normal to } \mathbf{c} \text{ and } \mathbf{a} \\ &\mathbf{c}^* \text{ is normal to } \mathbf{a} \text{ and } \mathbf{b} \end{aligned}\right] \tag{2.14}$$

In vector notation, it means

$$\left.\begin{array}{ll} \mathbf{a}^*.\mathbf{b} = 0 & \mathbf{a}^*.\mathbf{c} = 0 \\ \mathbf{b}^*.\mathbf{c} = 0 & \mathbf{b}^*.\mathbf{a} = 0 \\ \mathbf{c}^*.\mathbf{a} = 0 & \mathbf{c}^*.\mathbf{b} = 0 \end{array}\right] \tag{2.15}$$

Taking scalar product of **a***, **b*** and **c*** with **a**, **b** and **c** respectively and using Eqs. (2.13), we find

$$\mathbf{a}^*.\mathbf{a} = 1, \quad \mathbf{b}^*.\mathbf{b} = 1, \quad \mathbf{c}^*.\mathbf{c} = 1 \tag{2.16}$$

It appears from Eqs. (2.16) that **a***, **b*** and **c*** are parallel to **a**, **b** and **c** respectively. However, this is not always true. In non-cubic crystal systems, such as monoclinic crystal system, as shown in Fig. 2.8, **a*** and **a** point in different directions, i.e., along OA′, and OA respectively. Thus all that is meant by Eqs. (2.16) is that the length of **a*** is the reciprocal of $a \cos\theta$, where θ is the angle between **a*** and **a**.

In some texts on Solid State Physics, the primitive translation vectors **a**, **b** and **c** of a direct lattice are related to the primitive translation vectors **a***, **b*** and **c*** of the reciprocal lattice as

$$\mathbf{a}^*.\mathbf{a} = \mathbf{b}^*.\mathbf{b} = \mathbf{c}^*.\mathbf{c} = 2\pi \tag{2.17}$$

with Eqs. (2.15) still being valid. These equations can be satisfied by choosing the reciprocal lattice vectors as

$$\left.\begin{aligned} \mathbf{a}^* &= 2\pi \frac{\mathbf{b}\times\mathbf{c}}{\mathbf{a}.\mathbf{b}\times\mathbf{c}} \\ \mathbf{b}^* &= 2\pi \frac{\mathbf{c}\times\mathbf{a}}{\mathbf{a}.\mathbf{b}\times\mathbf{c}} \\ \mathbf{c}^* &= 2\pi \frac{\mathbf{a}\times\mathbf{b}}{\mathbf{a}.\mathbf{b}\times\mathbf{c}} \end{aligned}\right] \tag{2.18}$$

It is now obvious that every crystal structure is associated with two important lattices — the direct lattice and the reciprocal lattice. The two lattices are related to each other by Eqs. (2.13). The fundamental translation vectors of the crystal lattice and the reciprocal lattice have dimensions of [length] and $[\text{length}]^{-1}$ respectively. This is why the latter is called the reciprocal lattice. Also, the volume of the unit cell of a reciprocal lattice is inversely proportional to the volume of the unit cell of its direct lattice.

A crystal lattice is a lattice in real or ordinary space, i.e., the space defined by the coordinates, whereas a reciprocal lattice is a lattice in the *reciprocal space*, *associated* **k**-*space* or *Fourier space*. A wave vector **k** is always drawn in the **k**-space. The points of the crystal lattice are given by

$$\mathbf{T} = m\mathbf{a} + n\mathbf{b} + p\mathbf{c} \tag{2.19}$$

where m, n and p are integers. Similarly, the reciprocal lattice points or reciprocal lattice vectors may be defined as

$$\mathbf{G} = h\mathbf{a}^* + k\mathbf{b}^* + l\mathbf{c}^* \tag{2.20}$$

where h, k and l are integers. Every point in the Fourier space has a meaning, but the reciprocal lattice points defined by Eq. (2.20) carry a special importance. In order to find the significance of **G**'s, we take the dot product of **G** and **T** :

$$\mathbf{G.T} = (h\mathbf{a}^* + k\mathbf{b}^* + l\mathbf{c}^*) \,.\, (m\mathbf{a}+n\mathbf{b}+p\mathbf{c})$$

$$= 2\pi\,(hm+kn+lp) = 2\pi \text{ (an integer)}$$

or

$$\exp\,(i\mathbf{G.T}) = 1$$

where we have used Eq. (2.17). Thus it is clear from Eq. (2.20) that h, k and l define the coordinates of the points of reciprocal lattice space. In other words, it means that a point (h,k,l) in the reciprocal space corresponds to the set of parallel planes having the Miller indices (hkl). The concept of reciprocal lattice is useful for redefining the Bragg's condition and introducing the concept of Brillouin zones.

2.4.2 Reciprocal Lattice to SC Lattice

The primitive translation vectors of a simple cubic lattice may be written as

$$\mathbf{a} = a\hat{\mathbf{i}},\ \mathbf{b} = a\hat{\mathbf{j}},\ \mathbf{c} = a\hat{\mathbf{k}}$$

Volume of the simple cubic unit cell $= \mathbf{a.b\times c}$

$$= a^3\,(\hat{\mathbf{i}}.\hat{\mathbf{j}}\times\hat{\mathbf{k}}) = a^3$$

Using Eqs. (2.18), the reciprocal lattice vectors to the *sc* lattice are obtained as

$$\mathbf{a}^* = 2\pi\,\frac{\mathbf{b}\times\mathbf{c}}{\mathbf{a.b}\times\mathbf{c}} = 2\pi\,\frac{a\hat{\mathbf{j}}\times a\hat{\mathbf{k}}}{a^3} = \frac{2\pi}{a}\hat{\mathbf{i}}$$

Similarly,

$$\mathbf{b}^* = 2\pi\,\frac{\mathbf{c}\times\mathbf{a}}{\mathbf{a.b}\times\mathbf{c}} = \frac{2\pi}{a}\hat{\mathbf{j}} \tag{2.21}$$

and

$$\mathbf{c}^* = 2\pi\,\frac{\mathbf{a}\times\mathbf{b}}{\mathbf{a.b}\times\mathbf{c}} = \frac{2\pi}{a}\hat{\mathbf{k}}$$

The Eqs. (2.21) indicate that all the three reciprocal lattice vectors are equal in magnitude which means that the reciprocal lattice to *sc* lattice is also simple

cubic but with lattice constant equal to $2\pi/a$.

2.4.3 Reciprocal Lattice to BCC Lattice

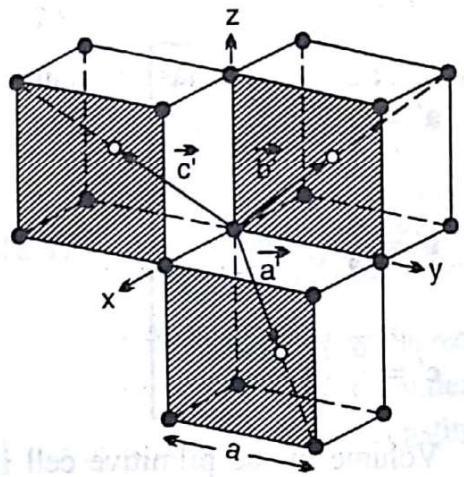

Fig. 2.10. *Primitive translation vectors of a bcc lattice.*

The primitive translation vectors of a body-centred cubic lattice, as shown in Fig. 2.10, are

$$\left.\begin{aligned} \mathbf{a}' &= \frac{a}{2}\left(\hat{\mathbf{i}}+\hat{\mathbf{j}}-\hat{\mathbf{k}}\right) \\ \mathbf{b}' &= \frac{a}{2}\left(-\hat{\mathbf{i}}+\hat{\mathbf{j}}+\hat{\mathbf{k}}\right) \\ \mathbf{c}' &= \frac{a}{2}\left(\hat{\mathbf{i}}-\hat{\mathbf{j}}+\hat{\mathbf{k}}\right) \end{aligned}\right] \tag{2.22}$$

where a is the length of the cube edge and $\hat{\mathbf{i}}$, $\hat{\mathbf{j}}$ and $\hat{\mathbf{k}}$ are the orthogonal unit vectors along the cube edges. The volume of the primitive cell is given by

$$\mathbf{V} = \mathbf{a}'.\mathbf{b}'\times\mathbf{c}' = \frac{a}{2}\left(\hat{\mathbf{i}}+\hat{\mathbf{j}}-\hat{\mathbf{k}}\right) \cdot \left[\frac{a^2}{4}\left(-\hat{\mathbf{i}}+\hat{\mathbf{j}}+\hat{\mathbf{k}}\right)\times\left(\hat{\mathbf{i}}-\hat{\mathbf{j}}+\hat{\mathbf{k}}\right)\right]$$

$$= \frac{a}{2}\left(\hat{\mathbf{i}}+\hat{\mathbf{j}}-\hat{\mathbf{k}}\right) \cdot \frac{a^2}{2}\left(\hat{\mathbf{i}}+\hat{\mathbf{j}}\right)$$

$$= a^3/2$$

Using Eqs. (2.18), the reciprocal lattice vectors are obtained as

$$\mathbf{a}^* = 2\pi\,\frac{\mathbf{b}'\times\mathbf{c}'}{\mathbf{a}'.\,\mathbf{b}'\times\mathbf{c}'} = \frac{2\pi\left(a^2/2\right)}{a^3/2}\left(\hat{\mathbf{i}}+\hat{\mathbf{j}}\right) = \frac{2\pi}{a}\left(\hat{\mathbf{i}}+\hat{\mathbf{j}}\right)$$

Similarly,

$$\mathbf{b}^* = 2\pi\,\frac{\mathbf{c}'\times\mathbf{a}'}{\mathbf{a}'.\,\mathbf{b}'\times\mathbf{c}'} = \frac{2\pi}{a}\left(\hat{\mathbf{j}}+\hat{\mathbf{k}}\right) \tag{2.23}$$

and

$$\mathbf{c}^* = 2\pi\,\frac{\mathbf{a}'\times\mathbf{b}'}{\mathbf{a}'.\,\mathbf{b}'\times\mathbf{c}'} = \frac{2\pi}{a}\left(\hat{\mathbf{k}}+\hat{\mathbf{i}}\right)$$

As will be seen later, these are the primitive translation vectors of an *fcc* lattice. Thus the reciprocal lattice to a *bcc* lattice is *fcc* lattice.

2.4.4 Reciprocal Lattice to FCC Lattice

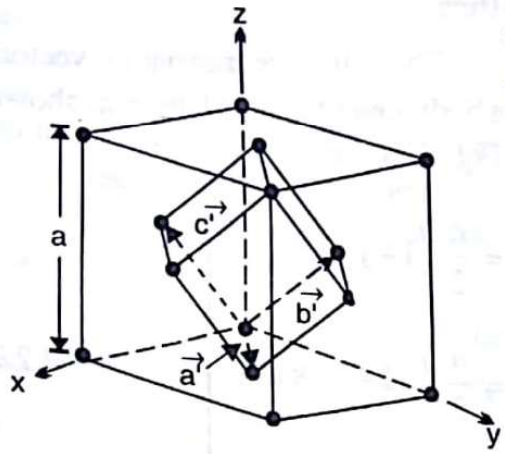

Fig. 2.11. *Primitive translation vectors of an fcc lattice.*

The primitve translation vectors of an *fcc* lattice, as shown in Fig. 2.11, are

$$\left.\begin{aligned} \mathbf{a}' &= \frac{a}{2}\left(\hat{\mathbf{i}}+\hat{\mathbf{j}}\right) \\ \mathbf{b}' &= \frac{a}{2}\left(\hat{\mathbf{j}}+\hat{\mathbf{k}}\right) \\ \mathbf{c}' &= \frac{a}{2}\left(\hat{\mathbf{k}}+\hat{\mathbf{i}}\right) \end{aligned}\right] \tag{2.24}$$

Volume of the primitive cell is given by

$$\begin{aligned} V &= \mathbf{a}' \,.\mathbf{b}' \times \mathbf{c}' \\ &= \frac{a}{2}\left(\hat{\mathbf{i}}+\hat{\mathbf{j}}\right) . \frac{a^2}{4}\left[\left(\hat{\mathbf{j}}+\hat{\mathbf{k}}\right)\times\left(\hat{\mathbf{k}}+\hat{\mathbf{i}}\right)\right] \\ &= \frac{a}{2}\left(\hat{\mathbf{i}}+\hat{\mathbf{j}}\right) . \frac{a^2}{4}\left(\hat{\mathbf{i}}+\hat{\mathbf{j}}-\hat{\mathbf{k}}\right) \\ &= a^3/4 \end{aligned}$$

Using Eqs. (2.18), the primitive translation vectors of the reciprocal lattice are obtained as

$$\mathbf{a}^* = 2\pi \frac{\mathbf{b}'\times\mathbf{c}'}{\mathbf{a}'.\,\mathbf{b}'\times\mathbf{c}'} = 2\pi \frac{\left(a^2/4\right)\left(\hat{\mathbf{i}}+\hat{\mathbf{j}}-\hat{\mathbf{k}}\right)}{a^3/4} = \frac{2\pi}{a}\left(\hat{\mathbf{i}}+\hat{\mathbf{j}}-\hat{\mathbf{k}}\right)$$

Similarly,

$$\mathbf{b}^* = 2\pi \frac{\mathbf{c}'\times\mathbf{a}'}{\mathbf{a}'.\,\mathbf{b}'\times\mathbf{c}'} = \frac{2\pi}{a}\left(-\hat{\mathbf{i}}+\hat{\mathbf{j}}+\hat{\mathbf{k}}\right) \tag{2.25}$$

and

$$\mathbf{c} = 2\pi \frac{\mathbf{a}'\times\mathbf{b}'}{\mathbf{a}'.\,\mathbf{b}'\times\mathbf{c}'} = \frac{2\pi}{a}\left(\hat{\mathbf{i}}-\hat{\mathbf{j}}+\hat{\mathbf{k}}\right)$$

Comparing Eqs. (2.25) with Eqs. (2.22), we find that these are the primitive translation vectors of a *bcc* lattice having length of the cube edge as $2\pi/a$. Thus the reciprocal lattice to an *fcc* lattice is a *bcc* lattice.

2.5 PROPERTIES OF RECIPROCAL LATTICE

1. Each point in a reciprocal lattice corresponds to particular set of parallel planes of the direct lattice.
2. The distance of a reciprocal lattice point from an arbitrarily fixed origin is inversely proportional to the interplanar spacing of the corresponding parallel planes of the direct lattice.
3. The volume of a unit cell of the reciprocal lattice is inversely proportional to the volume of the corresponding unit cell of the direct lattice.
4. The unit cell of the reciprocal lattice need not be a parallelopiped. It is customary to deal with Wigner-Seitz cell of the reciprocal lattice which constitutes the Brillouin zone.
5. The direct lattice is the reciprocal lattice to its own reciprocal lattice. Simple cubic lattice is self-reciprocal whereas *bcc* and *fcc* lattices are reciprocal to each other.

2.6. BRAGG'S LAW IN RECIPROCAL LATTICE

The Bragg's diffraction condition obtained earlier by considering reflection from parallel lattice planes can be used to express geometrical relationship between the vectors in the reciprocal lattice. Consider a reciprocal lattice as shown in Fig. 2.12. Starting from the point A (not necessarily a reciprocal lattice point), draw a vector $\vec{AO}$ of length $1/\lambda$ in the direction of the incident x-ray beam which terminates at the origin O of the reciprocal lattice. Taking A as the centre, draw a sphere of radius AO which may intersect some point B of the reciprocal lattice.

Let the coordinates of point B be (h', k', l') which may have a highest common factor n, i.e., the coordinates are of the type (nh, nk, nl), where h, k and l do not have a common factor other than unity. Apparently, vector $\vec{OB}$ is the reciprocal vector. It must, therefore, be normal to the plane $(h'k'l')$ or (hkl) and should have length equal to $1/d_{h'k'l'}$ or n/d_{hkl} Thus,

$$|\vec{OB}| = n/d_{hkl} \tag{2.26}$$

It follows from the geometry of Fig. 2.12. that one such plane is the plane AE. If $\angle EAO = \theta$ is the angle between the incident ray and the normal, then from ΔAOB, we have

$$OB = 2\ OE = 2\ OA \sin\theta = (2 \sin\theta)/\lambda \tag{2.27}$$

From Eqs. (2.26) and (2.27), we get

$$(2 \sin\theta)/\lambda = n/d_{hkl}$$

or $$2d_{hkl}\sin\theta = n\lambda$$

which is the Bragg's law, n being the order of reflection. Thus we notice that if the coordinates of a reciprocal point, (nh, nk, nl), contain a common factor n, then it represents nth order reflection from the planes (hkl). It is also evident from the above geometrical construction that the Bragg's condition will be satisfied for a given wavelength λ provided the surface of radius $1/\lambda$ drawn about the point A intersects a point of the reciprocal lattice. Such a construction is called *Ewald construction.*

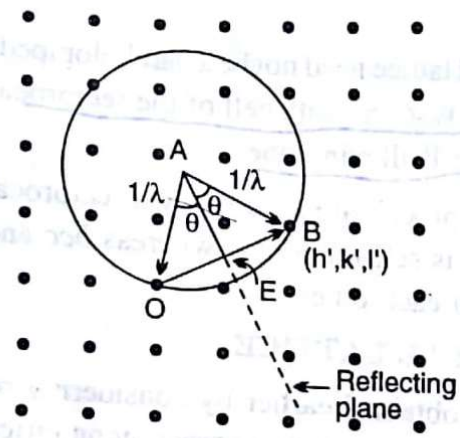

Fig. 2.12. *Ewald construction in the reciprocal lattice.*

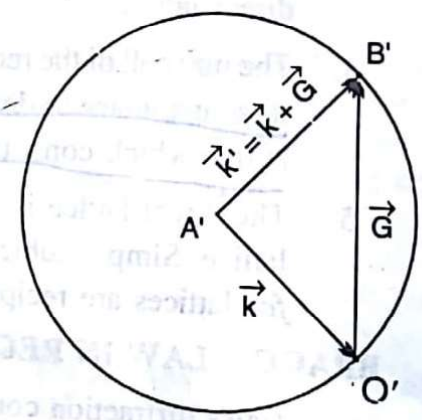

Fig. 2.13. *Magnified Ewald construction relating reciprocal lattice vector to the wave vectors of the incident and reflected radiation.*

The Bragg's law itself takes a different form in the reciprocal lattice. To obtain the modified form of the Bragg's law, we redraw the vectors $\overrightarrow{AO}$, $\overrightarrow{OB}$ and $\overrightarrow{AB}$ such that each is magnified by a constant factor of 2π. Let the new vectors be $\overrightarrow{A'O'}$, $\overrightarrow{O'B'}$ and $\overrightarrow{A'B'}$ respectively as shown in Fig. 2.13. Since

$$A'O' = 2\pi\ (AO) = 2\pi/\lambda,$$

we can represent the wave vector **k** by the vector $\overrightarrow{A'O'}$. The vector $\overrightarrow{O'B'}$ is the reciprocal vector and is written as **G**. Thus according to vector algebra, $\overrightarrow{A'B'}$ must be equal to (**k** + **G**). For diffraction to occur, the point B' must be on the sphere, i.e.,

$$|\overrightarrow{A'B'}| = |\overrightarrow{A'O'}|$$

or $$(\mathbf{k} + \mathbf{G})^2 = k^2$$

or $$k^2 + 2\mathbf{k}.\mathbf{G} + G^2 = k^2$$

or $$2\mathbf{k}.\mathbf{G} + G^2 = 0 \qquad (2.28)$$

This is the vector form of Bragg's law and is used in the construction of the Brillouin zones.

The vector $\overrightarrow{A'B'}$ represents the direction of reflected or scattered beam. Denoting it by **k′**, we get

$$\mathbf{k}' = \mathbf{k} + \mathbf{G}$$

which gives

$$k'^2 = k^2 \tag{2.29}$$

and

$$\mathbf{k}' - \mathbf{k} = \Delta\mathbf{k} = \mathbf{G} \tag{2.30}$$

This indicates that the scattering does not change the magnitude of wave vector **k**; only its direction is changed. Also, the scattered wave differs from the incident wave by a reciprocal lattice vector **G**.

2.7 BRILLOUIN ZONES

It has been indicated in the Ewald construction that all the **k**-values for which the reciprocal lattice points intersect the Ewald sphere are Bragg reflected. A *Brillouin zone* is the locus of all those **k**-values in the reciprocal lattice which are Bragg reflected. We construct the Brillouin zones for a simple square lattice of s.de a. The primitive translation vectors of this lattice are

$$\mathbf{a} = a\hat{\mathbf{i}}; \quad \mathbf{b} = a\hat{\mathbf{j}}$$

The corresponding translation vectors of the reciprocal lattice are

$$\mathbf{a}^* = (2\pi/a)\,\hat{\mathbf{i}}\,;\ \mathbf{b}^* = (2\pi/a)\hat{\mathbf{j}}$$

Therefore, the reciprocal lattice vector is written as $G = (a^* h + b^* k)$

$$\mathbf{G} = (2\pi/a)\,(h\hat{\mathbf{i}} + k\hat{\mathbf{j}})$$

where h and k are integers. The wave vector **k** can be expressed as

$$\mathbf{k} = k_x\hat{\mathbf{i}} + k_y\hat{\mathbf{j}}$$

From the Bragg's condition (2.28), we have

$$2\mathbf{k}.\mathbf{G} + G^2 = 0$$

or $$\frac{4\pi}{a}\,[(k_x\hat{\mathbf{i}} + k_y\hat{\mathbf{j}})\,.\,(h\hat{\mathbf{i}} + k\hat{\mathbf{j}})] + \frac{4\pi^2}{a^2}\,(h^2 + k^2) = 0$$

or $$hk_x + kk_y = -(\pi/a)\,(h^2 + k^2) \tag{2.31}$$

The **k**-values which are Bragg reflected are obtained by considering all possible combinations of h and k.

For $h = \pm 1$ and $k = 0$, $k_x = \pm\pi/a$ and k_y is arbitrary;

Also, for $h = 0$ and $k = \pm 1$, $k_y = \pm\pi/a$ and k_x is arbitrary.

These four lines, i.e., $k_x = \pm\pi/a$ and $k_y = \pm\pi/a$, are plotted in Fig. 2.14. Taking origin as shown, all the **k**-vectors originating from it and terminating on these lines will produce Bragg reflection. The square bounded by these four lines is called the *first Brillouin zone*. Thus the first zone of a square lattice of side a is a square of side $2\pi/a$. In addition to this set of lines, some other sets of lines are also possible which satisfy (2.31). For example, for $h = \pm 1$ and $k = \pm 1$, the condition (2.31) gives the following set of four lines.

$$\pm k_x \pm k_y = 2\pi/a$$

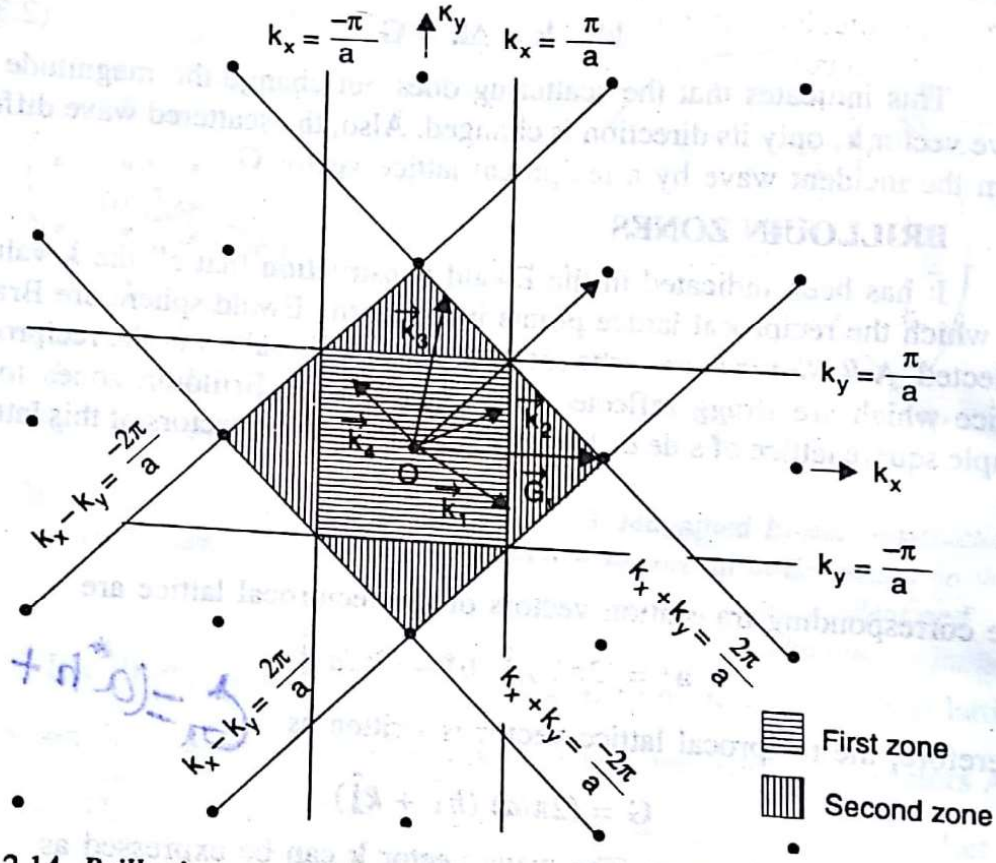

Fig. 2.14. *Brillouin zones of a square lattice in its reciprocal lattice. The vectors* $\mathbf{k}_1$, $\mathbf{k}_2$, *and* $\mathbf{k}_3$ *are Bragg reflected whereas* $\mathbf{k}_4$ *is not. The vectors* $\mathbf{k}_1$ *and* $\mathbf{k}_2$ *have the same reciprocal lattice vector* $\mathbf{G}_1$, *while* $\mathbf{G}_2$ *is the reciprocal vectors of* $\mathbf{k}_3$.

These lines are also plotted in Fig. 2.14. The additional area bounded by these four lines is the *second Brillouin zone*. Similarly the other zones can be constructed. The boundaries of the Brillouin zones represent the loci of **k**-values that are Bragg reflected and hence may be considered as the reflecting planes. The boundaries of the first zone represent the reflecting planes for the first order reflection, those of the second zone represent the reflecting planes for the second order reflection, and so on. A **k**-vector that does not terminate at a zone boundary cannot produce Bragg reflection. Thus the Brillouin zone pattern can be employed to determine the x-ray diffraction pattern of a crystal and vice versa.

The Brillouin zones for a three-dimensional cubical lattice are constructed using the generalized equation

$$hk_x + kk_y + lk_z = -(\pi/a)\,(h^2 + k^2 + l^2) \tag{2.32}$$

where a is the length of the cube edge. It is clear from Eq. (2.32) that the first zone is a cube having side equal to $2\pi/a$. The second zone is formed by adding pyramids to each face of the cube (first zone) as triangles are added to the square in two dimensions, and so on.

There is another simple method to determine Brillouin zones. We note from Fig. 2.14 that the reciprocal lattice vector **G** which satisfies Eq. (2.28) is a perpendicular bisector of the zone boundary and all the **k**-vectors lying on this boundary have the same **G** for reflection. Thus it is sufficient to consider only the allowed **G**-values and their normal bisectors to construct the Brillouin zones. The first Brillouin zone is the region bounded by the normal bisectors of the shortest possible **G**-vectors, the second zone is the region bounded by the normal bisectors of the next larger **G**-vectors, and so on. This method will be used to determine the Brillouin zones of the *bcc* and *fcc* lattices as given below.

2.7.1 Brillouin Zone of BCC Lattice

The primitive translation vectors of a *bcc* lattice are

$$\mathbf{a} = (a/2)\,(\hat{\mathbf{i}}+\hat{\mathbf{j}}-\hat{\mathbf{k}})$$

$$\mathbf{b} = (a/2)\,(-\hat{\mathbf{i}}+\hat{\mathbf{j}}+\hat{\mathbf{k}})$$

$$\mathbf{c} = (a/2)\,(\hat{\mathbf{i}}-\hat{\mathbf{j}}+\hat{\mathbf{k}})$$

The primitive translation vectors of its reciprocal lattice are (Sec. 2.4.3)

$$\mathbf{a}^* = (2\pi/a)\,(\hat{\mathbf{i}}+\hat{\mathbf{j}})$$

$$\mathbf{b}^* = (2\pi/a)\,(\hat{\mathbf{j}}+\hat{\mathbf{k}})$$

$$\mathbf{c}^* = (2\pi/a)\,(\hat{\mathbf{k}}+\hat{\mathbf{i}})$$

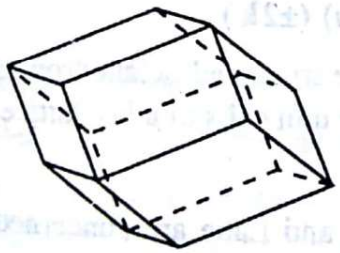

Fig. 2.15. *First Brillouin zone of a bcc lattice.*

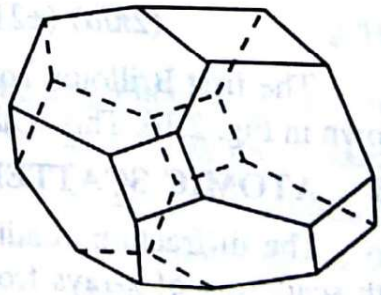

Fig. 2.16. *First Brillouin zone of an fcc lattice.*

The G-type reciprocal lattice vector is

$$\mathbf{G} = h\mathbf{a}^* + k\mathbf{b}^* + l\mathbf{c}^*$$

$$= (2\pi/a)\,[(h + l)\,\hat{\mathbf{i}} + (h + k)\,\hat{\mathbf{j}} + (k + l)\,\hat{\mathbf{k}}] \qquad (2.33)$$

The shortest non-zero G's are the following twèlve vectors

$$(2\pi/a)\,(\pm\hat{\mathbf{i}} \pm \hat{\mathbf{j}});\ (2\pi/a)\,(\pm\hat{\mathbf{j}} \pm \hat{\mathbf{k}});\ (2\pi/a)(\pm\hat{\mathbf{k}} \pm \hat{\mathbf{i}})$$

The first Brillouin zone is the region enclosed by the normal bisector planes to these twelve vectors. This zone has the shape of a regular twelve-faced solid as shown in Fig. 2.15 and is called rhombic dodecahedron.

2.7.2 Brillouin Zone of FCC Lattice

The primitive translation vectors of an *fcc* lattice are

$$\mathbf{a} = (a/2)\,(\hat{\mathbf{i}} + \hat{\mathbf{j}})$$

$$\mathbf{b} = (a/2)\,(\hat{\mathbf{j}} + \hat{\mathbf{k}})$$

$$\mathbf{c} = (a/2)\,(\hat{\mathbf{k}} + \hat{\mathbf{i}})$$

The primitive translation vectors of its reciprocal lattice are (Sec. 2.4.4)

$$\mathbf{a}^* = (2\pi/a)\,(\hat{\mathbf{i}}+\hat{\mathbf{j}}-\hat{\mathbf{k}})$$

$$\mathbf{b}^* = (2\pi/a)\,(-\hat{\mathbf{i}}+\hat{\mathbf{j}}+\hat{\mathbf{k}})$$

$$\mathbf{c}^* = (2\pi/a)\,(\hat{\mathbf{i}}-\hat{\mathbf{j}}+\hat{\mathbf{k}})$$

The G-type vector is

$$\mathbf{G} = h\mathbf{a}^* + k\mathbf{b}^* + l\mathbf{c}^*$$

$$= (2\pi/a)\,[(h - k + l)\,\hat{\mathbf{i}} + (h + k - l)\,\hat{\mathbf{j}} + (-h + k + l)\,\hat{\mathbf{k}}] \qquad (2.34)$$

The shortest non-zero G's are the following eight vectors

$$(2\pi/a)\,(\pm\hat{\mathbf{i}} \pm \hat{\mathbf{j}} \pm \hat{\mathbf{k}})$$

The boundaries of the first Brillouin zone are determined mostly by the normal bisector planes to the above eight vectors. However, the corners of the octahedron obtained in this manner are truncated by the planes which are normal bisectors to the following six reciprocal lattice vectors

$$(2\pi/a)\,(\pm 2\hat{\mathbf{i}});\ (2\pi/a)\,(\pm 2\hat{\mathbf{j}});\ (2\pi/a)\,(\pm 2\hat{\mathbf{k}})$$

The first Brillouin zone has the shape of the truncated octahedron as shown in Fig. 2.16. This is also one of the primitive unit cells of a *bcc* lattice.

2.8 ATOMIC SCATTERING FACTOR

The diffraction conditions given by Bragg and Laue are concerned with scattering of x-rays from point scattering centres arranged on a space lattice. Since an electron is the smallest scattering centre, the diffraction conditions would ideally be applicable to a lattice in which every lattice point is occupied by an electron. This is, however, not a realistic situation. Lattice