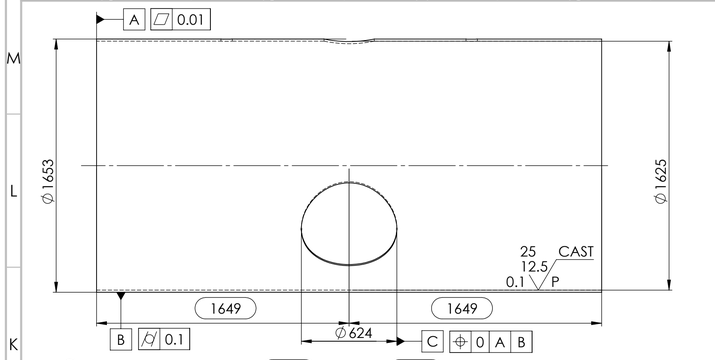

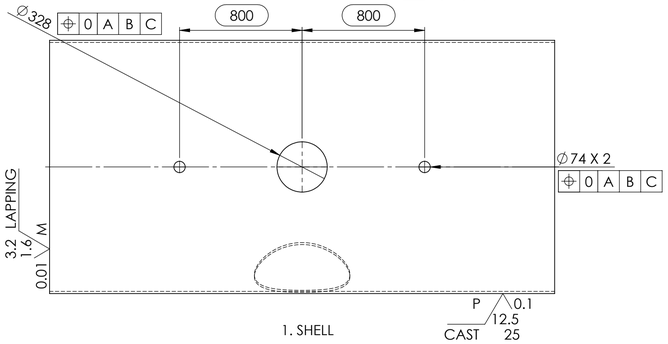

1. SHELL

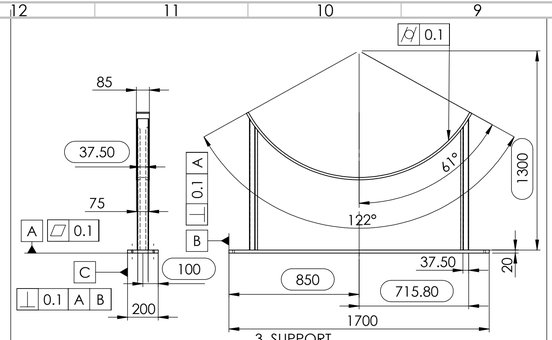

3. SUPPORT

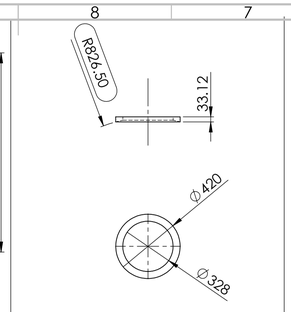

13. OUTLET EXTERNAL PAD

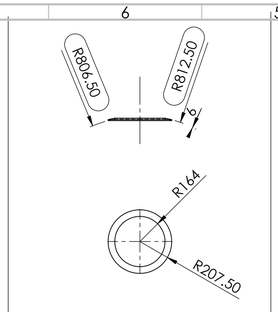

14. OUTLET INTERNAL PAD

SCALE 1 : 1

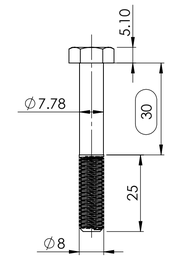

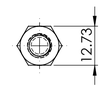

23. M8 INLET BOLT

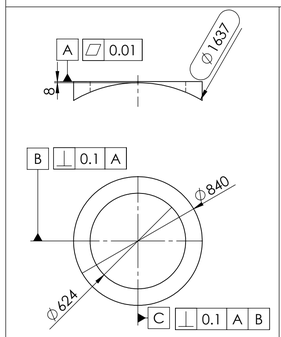

9. MAN HOLE EXTERNAL PAD

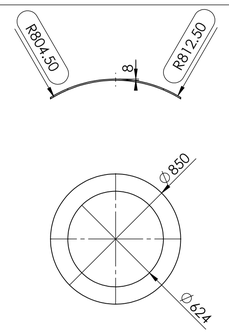

10. MAN HOLE INTERNAL PAD

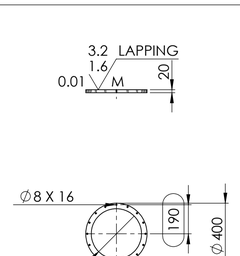

15. INLET NOZZLE FLANGE

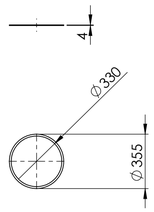

16. INLET GASKET

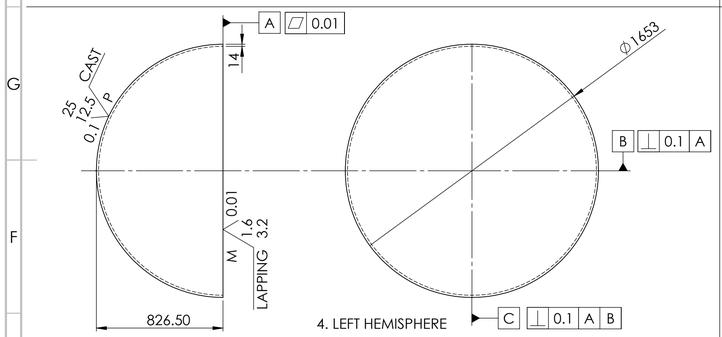

4. LEFT HEMISPHERE

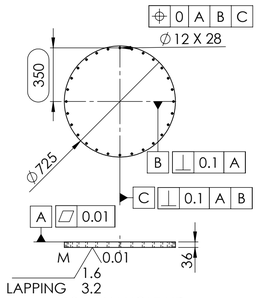

19. MAN HOLE LID

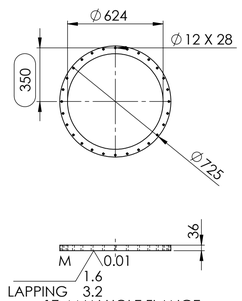

17. MAN HOLE FLANGE

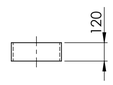

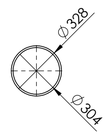

8. INLET NOZZLE

SCALE 1 : 10

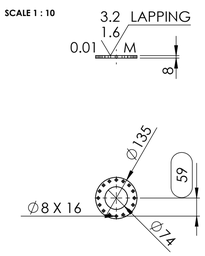

20. PRESSURE GAUGE NOZZLE FLANGE

SCALE 1 : 1

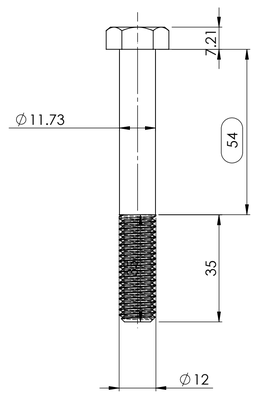

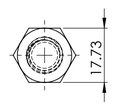

24. M12 BOLT

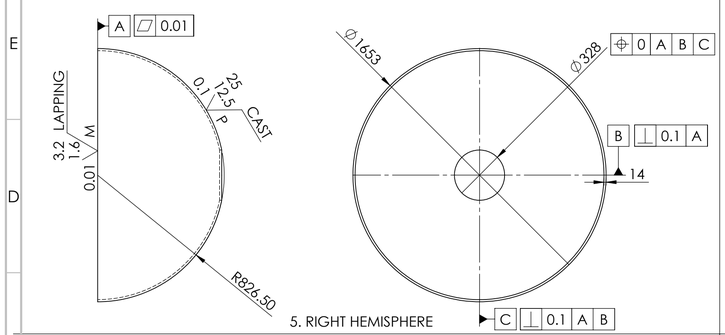

5. RIGHT HEMISPHERE

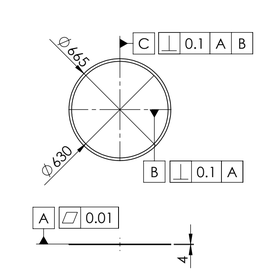

18. MAN HOLE GASKET

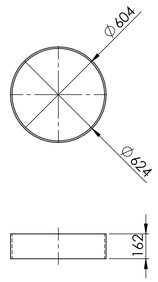

11. MAN HOLE NOZZLE

SCALE 1 : 5

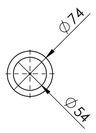

12. PRESSURE GAUGE NOZZLE

SCALE 1 : 1

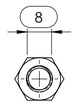

22. M8 NUT

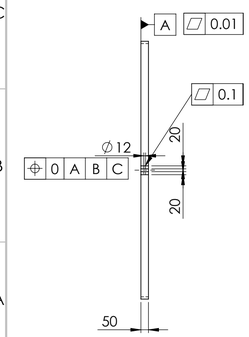

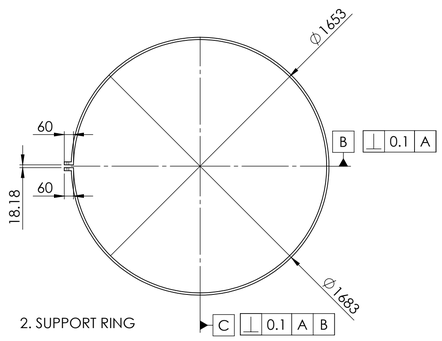

2. SUPPORT RING

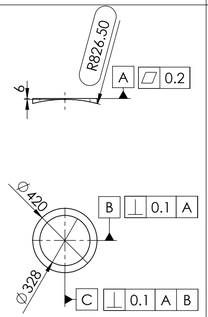

6. INLET EXTERNAL PAD

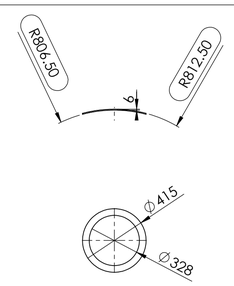

7. INLET INTERNAL PAD

SCALE 1 : 1

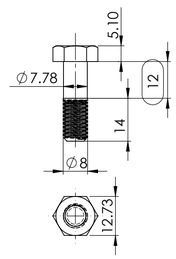

21. M8 BOLT GAUGE

SCALE 1 : 1

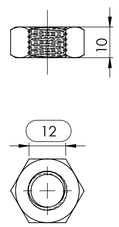

25. M12 NUT

UNLESS OTHERWISE SPECIFIED: DIMENSIONS ARE IN MILLIMETERS SURFACE FINISH: TOLERANCES: LINEAR: ANGULAR:	FINISH:		DEBURR AND BREAK SHARP EDGES	DO NOT SCALE DRAWING	REVISION
	NAME	SIGNATURE	DATE	TITLE: HORIZONTAL PRESSURE VESSEL PARTS	
DRAWN					
CHK'D					
APPV'D					
MFG					
Q.A			MATERIAL:	NAME ADITYA NITIN SONWANE	A1
				ROLL NO: C-43	
			WEIGHT:	SCALE:1:20	SHEET 1 OF 1