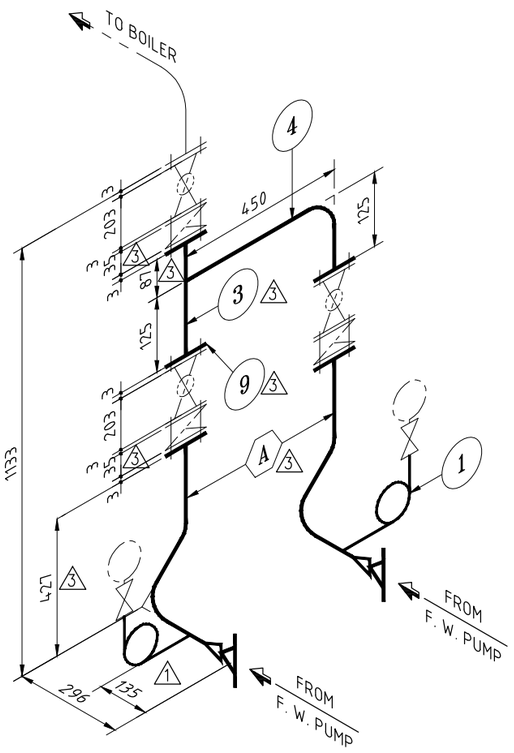

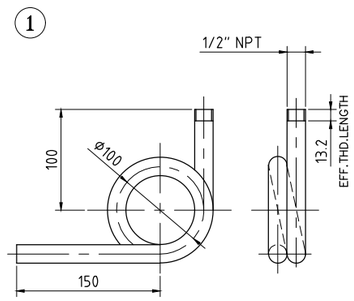

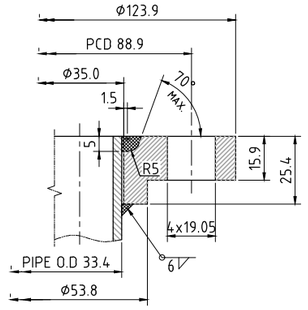

4 FIG.NO.31 OF IBR 1950
TYP. WELDING DETAIL OF ANSI SOFF FLANGE.

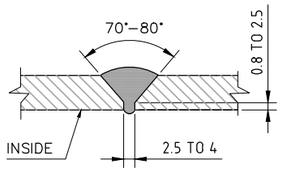

2 FIG.No.28 (IX) a OF IBR
TYP PIPE TO PIPE BUTT WELDING DETAIL

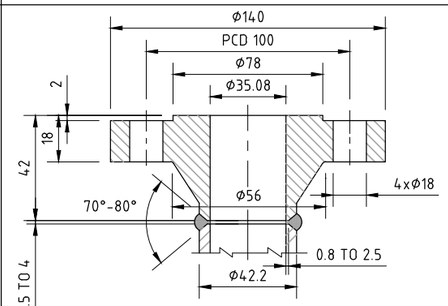

FIG.No.28 (IX) a OF IBR
2 TYPICAL WELDING DETAIL OF WNRF FLANGE

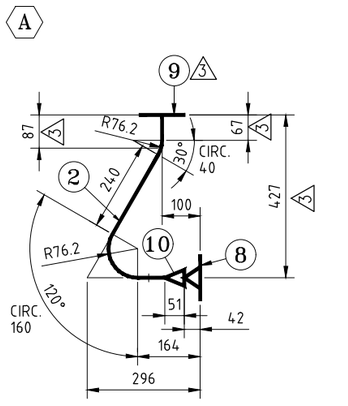

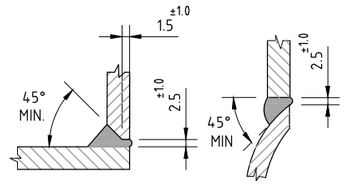

FIG.No. XII/93 (a) OF IBR
TYP UNEQUAL PIPE TO PIPE WELDING DETAIL

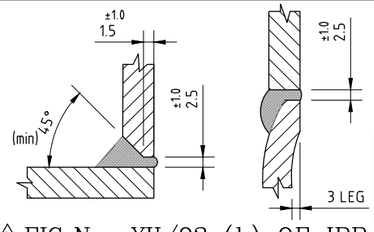

2 FIG.No. XII/93 (b) OF IBR
TYP EQUAL PIPE TO PIPE WELDING DETAIL

DESIGN DATA

1. DESIGN AND CONSTRUCTION CODE	IBR 1950 WITH LATEST AMENDMENTS	
2. DESIGN PRESSURE/ MAX. WORKING PRESSURE	24	Kgf/Sq.cm g
3. HYDRAULIC TEST PRESSURE	36	Kgf/Sq.cm g
4. DESIGN TEMPERATURE.	110	Deg.C.

NOTES :–

- o ALL FLANGE HOLES OFF CENTERLINE EXCEPT WHERE STATED
- o ALL DIMENSIONS ARE IN mm EXCEPT WHERE STATED
- o RADIOGRAPHY AS PER IBR
- o BENDING AS PER IBR 361 (a), OF IBR 1950
- 3 o TOTAL PIPE LENGTH ----- 3.196 Mtrs.
- o AS FAR AS POSSIBLE FEED PIPE SHOULD BE MADE FROM ONE PIPE OTHERWISE TO BE MADE BY BUTT WELDING AS SHOWN.

	SR. NO.	DESCRIPTION	QTY	MATERIAL	MIN.TENSILE STRENGTH IN Kgf/Sq.mm	USED FOR
	10	REDUCER 32 NB x 25 NB x SCH40	2	SA 234 Gr.WPB	42.18	FEED PIPE
4	9	FLANGE SOFF ANSI. CL.300 SIZE 25 NB	5	FCS SA 105	49.21	FEED PIPE
	8	FLANGE WNRF DIN 2635 PN 40, DN 32/SCH 40	2	FCS SA 105	49.21	F.W.PUMP MATCHING
	4	OD 33.4 x 3.38 THK x 542 Lg	1	SA 106 Gr.B	42.18	FEED PIPE
3	3	OD 33.4 x 3.38 THK x 212 Lg	1	SA 106 Gr.B	42.18	FEED PIPE
3	2	OD 33.4 x 3.38 THK x 578 Lg	2	SA 106 Gr.B	42.18	FEED PIPE
	1	OD 21.3 x 3.73 THK x 643 Lg	2	SA 106 Gr.B	42.18	PR.GAUGE CONN.

FOR ALTERATION DETAILS, REFER FIRST SHEET OF THE DRAWING

ALT. No.	ALTERATION	MADE BY	CHKD BY
1	MARKED DIMENSION 125 CHANGED TO 135.	FJS 01.04.09	
2	IBR COMMENTS INCORPORATED.	RESHMA 31.01.11	
3	ALL FLANGES CHANGED TO ANSI. CL. INSTEAD OF TABLE 'H'. HENCE, WELDING FIGURE CHANGED, & NRV CHANGED TO DCV4 HENCE, MARKED DIMN. CHANGED. CORRSPONDING CHANGES DONE.	GURUDAS 25.05.11	KDU 25.05.11
4	SR.NO.9 FLANGE FLANGE RAISED FACE REMOVED. IN WORDING SORF CHANGED TO SOFF.	FJS 14.08.12	

* THE COPYRIGHT OF THESE DRAWING AND OF ALL ENCLOSURES ENTRUSTED TO THE RECIPIENT PERSONALLY REMAINS THE EXCLUSIVE PROPERTY OF THE FIRM. WITHOUT OUR WRITTEN CONSENT THEY SHOULD NOT BE COPIED OR REPRODUCED OR DELIVERED OR MADE KNOWN TO THIRD PARTY. * IF IN DOUBT PLEASE ASK.

TOLERANCES ARE NON CUMULATIVE

ACCEPTABLE DEVIATION FOR UNTOLERANCED DIMENSION — ALLOWABLE LINEAR DEVIATION mm

DIM OVER	0	6	30	120	315	1000	2000	4000	8000	12000	16000
UP TO & INCLUDING	6	30	120	315	1000	2000	4000	8000	12000	16000	20000
MACHINING	± 0.1	± 0.2	± 0.3	± 0.5	± 0.8	± 1.2	± 2.0	± 3.0	± 4.0	± 5.0	± 6.0
FABRICATION	± 0.5	± 1.0	± 1.5	± 2.0	± 3.0	± 4.0	± 6.0	± 6.0	± 10.0	± 12.0	± 12.0

FINISH RA µm: ~ 25–50; ▽ 8–25; ▽▽ 1.6–8; ▽▽▽ 0.025–1.6; ▽▽▽▽ < 0.025

PRODUCT: HORIZONTAL MULTITUBULAR SHELL TYPE SMOKE TUBE BOILER

MODEL: FPDP1–25–32–24 — FP — Wt.IN kg.= 19.68 (APPROX)

TITLE: FEED PIPE

SCALE: 1:15

DESIGNED	PMS	16.06.06
DRAWN	KIRAN	19.06.06
CHECKED	NVK	19.06.06
APPROVED	RCPK	01.08.06

THERMAX LIMITED
CHINCHWAD PUNE 411019
(C & H HEATING ENGINEERING)
THERMAX

DRG. No. PGSM 23 1423 — ALT. No. 4

COMPUTER FILE NAME:- PGSM2314230004 PLOTTING SCALE:- 1:15 DRG.FILE LOCATION:- GHP'S D:\GURUDAS\INWARD\

(DCV 4 / C.S. VALVE/PUMP CR 3-23) THIS DRG. IS APPLICABLE FOR SM-10 TO 20 DL/10.54,17.5 & SM-30DL/10.54. THIS MASTER IS APPLICABLE FOR SR.NO. 2401 TO 2500