Development Board for the AFTx07 2024 Processor

Kevin Lu
VIP 27920
lu1001@purdue.edu

Aditya Verma
VIP 27920
verma231@purdue.edu

Spring 2026

The feedback for the report is to be returned to:

Kevin Lu
lu1001@purdue.edu

This project was mentored by the following Teaching Assistants:

Weijing Chen, chen4678@purdue.edu

Development Board for the AFTx07 2024 Processor

Kevin Lu
VIP 27920
lu1001@purdue.edu

Aditya Verma
VIP 27920
verma231@purdue.edu

Abstract

The current testing of the AFT x07 2024 chip relies on temporary breakout boards created during the Summer 2025 cycle, which are prone to signal instability and mechanical fragility. These existing boards do not have adequate power regulation and require many external wires in the form of an external bench setup. This introduces many outside variables, and makes it difficult to distinguish if an issue lies with the chip itself or with the testing setup. To address this, the proposed project involves the design of a development board that will feature a custom 2 or 4 layer PCB that can provide a stable 3.3 V regulated power rail to the chip, source a stable clock frequency, and break out all major peripherals such as GPIO and UART. At minimum, we aim to be able to boot the RISC-V core at a frequency of 25 MHz and confirm that the UART debugger communication works as intended. Some limitations that could create a need for future design iterations include the lack of a proper datasheet for the AFT x07 as well as the lack of onboard decoupling optimization, which would affect power rail noise and therefore chip performance. A successful bring-up will validate SoCET's design flow and will serve as an example for tapeouts in the future, reducing the amount of time it takes from tapeout to boot.

1 Introduction and Background

The goal of Purdue SoCET is to provide hands-on experience designing, fabricating, and testing a fully industry quality system-on-chip (SoC). The organization consists of several different sub teams, including but not limited to Digital Design, Verification, and PCB Bring up. As part of the PCB Bring up team, it is our goal to design and assemble a development board to validate the functionalities of the SoCs that SoCET tapes out. Our workflow includes defining the architecture and requirements, component selection, schematic capture in Altium/KiCAD, PCB Layout and routing, fabrication, assembly, and finally bring up/validation. Without a functional development board, it is extremely difficult to test the chip.

The current project targets the AFTx07, SoCET's seventh SoC iteration. The chip contains a RISC-V RV32IMC core (PMA + PMP, 3-stage pipeline), DMA controller, UART debugger, AHB interconnect, SPI and I2C peripherals, PLIC, CLINT, on-chip SRAM/ROM, and GPIO/Timer/PWM digital I/O.

Problem Statement

Prior testing relied on temporary breakout boards built during Summer 2025. These suffered from signal instability due to unregulated power, mechanical fragility, and a complex external bench setup that made it difficult to isolate chip faults from setup faults. An additional challenge is that no formal datasheet exists for the AFTx07; pin assignments and electrical characteristics had to be reconstructed in collaboration with the Digital Design and Verification sub-teams.

The goal is a dedicated PCB that integrates all required support circuitry, eliminates test-environment ambiguity, and enables a structured, repeatable validation sequence for every on-chip subsystem.

2 Design

2.1 Power

For the power architecture of the board, we found that the SkyWater 130nm process for the AFTx07 requires 3.3V for I/O and 1.8V to power the core. Part of our consideration for properly implementing the power rails required us to know if there was an internal regulator in the form of an on-chip power management circuit. When we confirmed the lack of an on-chip LDO, we implemented two LDO circuits for the board. For both of the LDOs, we selected two different AP2112Ks, one for 1.8V and one for 3.3V. First, we need to check the dropout of the LDO and see if the input to output difference is less than the dropout specification. If that is the case, then that would mean that the LDO would be unable to maintain the output voltage and would result in supply instability, potentially causing issues during bring up. Since our input voltage for both the 3.3V and 1.8V LDO is 5V, and the AP2112K has a 250mV max dropout at 600mA, this provides sufficient voltage headroom. [1]. Additionally, the supply voltage that we supply is safely under the maximum rated 6V, and is also above the minimum of 2.5V.

Another check that we must perform is a power dissipation check. Using the equation:

$$P_{ldo} = (V_{in} - V_{out}) \times I_{load}$$

we can calculate if the power dissipated is appropriate given our board conditions. In this section, it may be necessary to make many assumptions, since we do not know the current draw from our I/O and core. Based on a preliminary current estimate of approximately 280 mA on the 3.3V rail (excluding the AFTx07 I/O), the device operates within the 600 mA current limit specified by the manufacturer. However, the thermal

performance and power dissipation will need to be verified as safe during bring up, as discussed in the Limitations sections.

We also needed to implement an indicator LED for both the 3.3V rail and the 1.8V rail to easily confirm power rail functionality. To do so, we set up a 330 ohm resistor with a green LED for the 3.3V indicator. The setup for the 1.8V indicator was slightly more complex since this was already very close to the red LED's forward voltage (1.7V). Therefore, we used a N-channel MOSFET as a voltage controlled switch so that our LED would receive the proper turn on voltage. We selected the BSS138 since it has a worst case turn on voltage V_{GS} of 1.5V and has an absolute maximum rating of 20V, which is sufficient for our simple use case [2].

2.2 Clock Generation

Initially, for the clock generation, we suspected that there was an on-chip oscillator, which would require us to select a crystal. Selecting a crystal by itself would require us to make several different considerations such as if there was an on-chip damping resistor, as well as calculations for the different characteristics of the crystal that we select. However, based on the pin naming scheme, we had only one CLK pin, so we could conclude that we did not have an on-chip oscillator. Subsequently, this would mean we would need to select a crystal oscillator, a component that integrates both the crystal as well as the oscillator into one integrated circuit that will supply the clock frequency for the SoC. To select the crystal oscillator, we had a predefined target clock frequency of 25 MHz, therefore, we must select one that matches this frequency. We must also consider the crystal oscillator voltage compatibility. To properly do so, we referred to the Microchip AN3520 datasheet's methodology. In that datasheet, they checked that the $V_{OH} > V_{IH}$ and that $V_{OL} < V_{IL}$ [3]. This means that if V_OH doesn't exceed V_IH, then the pad would not detect a logic 1, and if V_OL doesn't maintain below V_IL, then the pad would not detect logic 0. The voltage input high (V_IH) and voltage input low (V_IL) are characteristics of the AFTx07, which we can estimate using the standard 70-30 rule:

$$V_{IH} = 0.7 \times 3.3 = 2.31 \text{ V}$$
$$V_{IL} = 0.3 \times 3.3 = 0.99 \text{ V}$$

From the ASE-25.000MHZ datasheet [4]:

$$V_{OH} = 0.9 \times 3.3 = 2.97 \text{ V}$$
$$V_{OL} = 0.1 \times 3.3 = 0.33 \text{ V}$$

Checking $V_{OH} > V_{IH}$ and $V_{OL} < V_{IL}$ again, we can confirm that our output levels are sufficient.

To be safe and avoid problems during boot, we also verified our start up timing. We needed to ensure that the time it took the crystal oscillator to produce a stable clock signal would not be more than the time it takes the AFTx07 to come out of reset. On the datasheet for the ASE-25.000MHZ, we see that the startup time has a defined absolute maximum of 2 ms. On our nRST circuit, we have a RC time constant:

$$\tau = R \times C = 10\text{k}\,\Omega \times 1\mu\text{F} = 10 \text{ ms}$$

Since our reset hold time is higher than our XO startup time, this suggests that our selection is acceptable.

2.3 External Memory

For the external memory, we needed to use two SRAM banks. We could not use DRAM because it requires a memory controller, which is not supported when we look at the pinout on the schematic symbol on the x07. To select an appropriate SRAM integrated circuit for the board, we needed to calculate the address space from the pin count. Since we know that each address pin is one binary digit of the address and we know that there are 18 address pins on the x07, we find that we have addressable locations:

$$2^{18} = 256\text{K}$$

Additionally, we know that the number of data pins directly tells us how many bits are read or written during a memory access. Since there are 16 data pins, there are 16 bits or 2 bytes. Multiplying the addressable locations by the bytes, we can obtain the total memory per chip:

Using two banks total,

$$2^{18} \times 2 \text{ bytes} = 512 \text{ KB}$$
$$2 \times 512 \text{ KB} = 1 \text{ MB}$$

This is how much RAM we have in total, which will be important to know what size of programs can be loaded. We also need to determine an appropriate access time margin for the SRAM IC. If the SRAM's access time is slower than the clock period, then that would mean that the data would not be ready for when the controller tries to read it, which could potentially cause memory failures during bring up. From the 71V416S15PHG8 datasheet, we find that it has a 15ns access time [5]. Since we already know our clock frequency is 25MHz, we can directly calculate the clock period using:

$$T_{clk} = 1/f = 1/25\text{MHz} = 40\text{ns}$$

Since our clock period is more than two times the SRAM access time, even after including propagation delay from traces or vias, the margin of 25ns should be able to provide a safe memory access.

2.4 Decoupling Strategy

The decoupling capacitors are implemented to provide low impedance across a wide frequency range and stabilize the power delivery network during transient switching events. We used one 100nF capacitor per power pin (as well as others for different sub-circuits) and one 4.7uF capacitor per voltage rail. We chose a larger package size (0603) for our capacitors since this will be easier to solder during assembly, potentially reducing the chance of soldering mistakes and losing tiny components. Also, it will be easier to find larger capacitor values in the case that our decoupling is not sufficient. Additionally, while multiple capacitor values can introduce anti-resonance

effects if they are not properly placed, a combination of values is generally used to reduce impedance across a wide range of frequencies. [6]. For our bulk decoupling, we used 4.7uF capacitors, which essentially recharge the smaller IC decoupling capacitors within the switching cycles. In the Electromagnetic Compatibility Engineering textbook, it is said that the exact value of the bulk capacitors isn't critical, but it should be greater than the sum of all of the individual IC decoupling capacitors [6]. This is held true in our scenario, since 7 * 100nF will not exceed the 4.7uF. For the placement of the bulk capacitors, we chose to place one bulk cap where the power enters the board and the remaining are distributed around the board.

3 Micro-architecture

The board's architecture is divided into three primary functional blocks: the Power Delivery Network, Clock Generation, and External Memory.

3.1 Power Delivery Network

The power delivery network is responsible for stepping down the external 5V supply to a regulated 3.3V for the I/O and 1.8V for the core rails required by the AFTx07. Power will flow from the primary input header through the two AP2112K low dropout regulators. To manage any noise from these power signals, 100 nF capacitors are placed as close as possible to the power pins on the x07 and the 4.7uF capacitors are placed throughout the board to recharge the local decoupling capacitors.

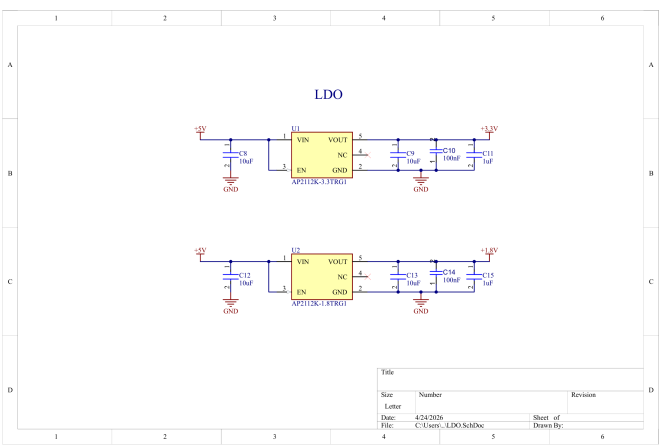

Figure 1: 3.3V and 1.8V Low Dropout Regulators implemented with manufacturer recommended decoupling

3.2 Clock Generation

The timing and initialization of the board are controlled by the crystal oscillator circuit. Since the x07 does not have an on-chip oscillator, the clock signal is provided by an Abracon 25MHz crystal oscillator.

The reset circuit is also relevant here because it maintains that the reset signal is asserted low longer than the maximum startup time of the crystal oscillator. This timing constraint ensures that our chip does not try to boot before a stable clock is generated.

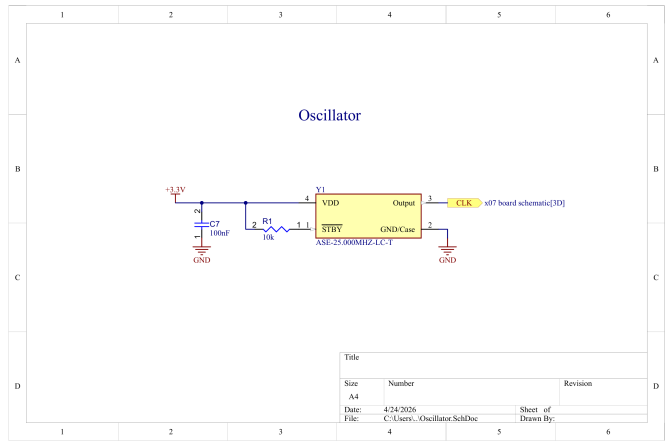

Figure 2: Sub-circuit for the 25MHz Crystal Oscillator

3.3 External Memory

The parallel 71V416 SRAM banks provide a total of 1MB of addressable memory (from an 18-bit address bus and a 16-bit data bus).

In order to prevent any timing hazards such as read/write failures, the timing margins were calculated using the 25MHz system clock and the SRAM datasheet access time value. The 25ns interval calculated from this provides a sufficient margin. Additionally, the trace lengths will be length matched to ensure that parallel bits arrive simultaneously.

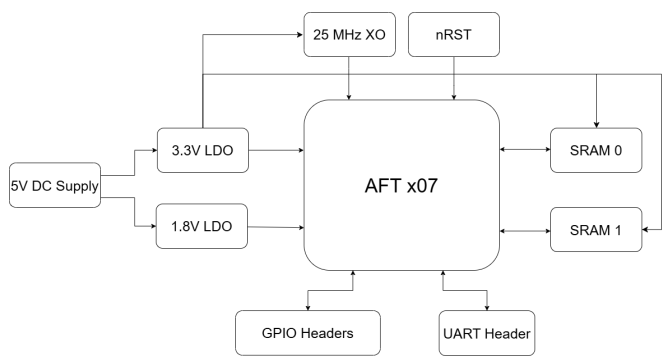

Figure 3: Board Block Diagram

3.4 System Integration

This block diagram gives a simplified overview of the different subsystems on the board.

The main challenge with the system integration was the floor-planning/layout and routing. When doing the layout, we followed a few general heuristics: keep the components of

each sub-circuit close to each other, put pin headers on the outside edges of the board, minimize the trace density, and minimize trace lengths. There are more general guidelines that we followed during layout, but these were ideas that we prioritized. Our finalized layout is as follows: AFTx07 in the center of the board, GPIO headers on the outer edges, both SRAM banks on the bottom layer, LDOs and power indicators near power headers on the opposite edge of the board, and XO as close as possible to the CLK pin. The most challenging aspect to handle was the two SRAM banks, since they are by far the largest components on the board and have a high pin count. In order to save space and make routing easier, we decided to place the SRAMs on the bottom layer. This came with the tradeoff of requiring a two stage baking process, potentially risking exhausting the standard component limit of three thermal reflow cycles, leaving one single cycle for rework.

Whilst we are still in the process of routing the board, our routing strategy is to first route the SRAMs, since this is the most congested routing area. We will route GPIO last since these are the least critical traces for timing.

4 Evaluation

4.1 Results

Since the board has yet to be manufactured and assembled, we do not have bring up results and data to confirm the functionality of the AFTx07. However, we have finished the schematic capture in Altium and are in the process of routing the board. The unfinished 3D view of the board is shown in Figure 4 and the finalized schematic capture is shown in Figure 5. Additionally, we have sourced a bill of materials (BOM) and confirmed stock and product lifecycle support using popular vendors such as Mouser and Digikey. Below is a simplified BOM table (Table 1).

After finishing routing, our verification plan will involve running a design rule check for the PCBdoc. We will not accept any errors in DRC before fabrication and will also need to route all nets, with the exception of those specifically marked to be left floating (such as the NC pins on the LDOs). Additionally, the constraint manager has been set to the constraints specified by our manufacturer, AdvancedPCB.com. Other checks we must perform before Gerber generation include netlist verification, final power/ground plane integrity checks, silkscreen review, as well as final 3D overview inspection.

After board assembly, the validation sequence will include continuity testing, power on test, as well as clock verification before checking other functionality such as UART, GPIO, and SRAM.

4.2 Limitations

After initially selecting the crystal oscillator, we communicated with our team lead and found that the CLK pad voltage level could not be 100% confirmed to be 3.3V. In order to handle this concern, we verified that our currently selected crystal oscillator had a footprint that would enable a quick swap with 1.8V output XO. We found that our current component footprint is a 4-pad SMD standard clock oscillator with a package size of 3.2×2.5 mm. This is a commonly available footprint and would enable flexibility if there were issues with our selected crystal oscillator module. In future designs, we would like to confirm the voltage level.

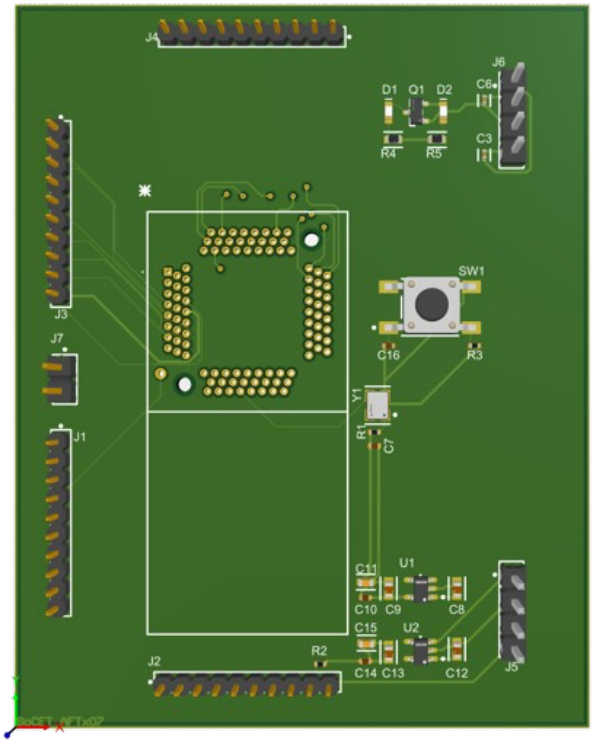

Figure 4: 3D View PCB

Another limitation in our design is the power dissipation estimate. We were unable to obtain an accurate current draw for the x07 core and I/O, so we were unable to fully confirm that the LDO would not have overheating issues. However, we can determine the maximum current that the other subsystems draw. For the 3.3V rail: Unknown AFTx07 I/O, 130 mA x2 for the SRAM, 10mA for the XO, and 4mA x2 for the LEDs. This comes out to be no more than 280 mA without the draw from the I/O, which is safely below the 600mA limit. For the 1.8 V rail, this is much less of a concern, since only the AFTx07 core draws current from this rail. Also, from considering the use cases as well as cross referencing well documented current draw data of similar MCUs such as the STM32F103x8, we could not find any signs that the selected LDOs would have an issue. Of course, we do concede that this rough estimate method is relatively weak and the current draws must be verified before we can proceed.

4.3 Discussion of Results

During layout/floor planning after the initial schematic draft, the schematic underwent several changes. This included relatively simple changes, such as remapping the pin headers for the GPIO breakout to make routing easier. Another addition that we needed to make was the addition of a second LDO, once we discovered that the core needed to be powered with a 1.8V rail. Once we confirmed the socket footprint needed for the x07, we also needed to swap the footprint in the PCB. After swapping the footprint, the pin mappings were double checked and it was discovered that some of the pin mappings had been incorrectly assigned when importing the new footprint from KiCAD, thus requiring manual reassignment.

5 Conclusion

We have documented the design of a dedicated development board for the AFTx07 SoC. The board replaces fragile test setups with a stable 4-layer PCB integrating dual-rail power regulation, a 25 MHz clock, 1 MB of asynchronous SRAM, UART debug, and full GPIO breakout. Immediate next steps are to finish routing, fabricate the board, assemble the board, and execute the bring-up sequence. A successful bring-up will validate SoCET's AFTx07 chip, and provide a reusable platform to validate future tapeout iterations.

Part	Description	Designator	Qty	Primary Vendor
AFT x07	SkyWater 130nm RISC-V SoC	*	1	SoCET
100nF Cap (0402)	Chip Capacitor, 100nF +/-20%, 50V, 0402	C1, C2, C4, C5, C7, C10, C14	7	DigiKey / Mouser
4.7uF Cap (0402)	10V 4.7uF X5R ±10% 0402 MLCC	C3, C6	2	DigiKey / Mouser
10uF Cap (0603)	16V 10uF X5R ±10% 0603 MLCC	C8, C9, C12, C13	4	DigiKey / Mouser
1uF Cap (0603)	10V 1uF X7R 0603 10% AEC-Q200	C11, C15	2	DigiKey / Mouser
1uF Cap (0402)	Chip Capacitor, 1µF +/-20%, 10V, 0402	C16	1	DigiKey / Mouser
Green LED (0603)	LED Uni-Color Green 572nm 0603	D1, D2	2	DigiKey / Mouser
10-Pin Header	Sullins Male Header, 10-Pos, 0.079” Pitch	J1, J2, J3, J4	4	DigiKey / Sullins
4-Pin Header	Samtec TSW 2.54mm, 1x4, Through Hole	J5, J6	2	Samtec / DigiKey
2-Pin Header	Samtec TSW 2.54mm, 1x2, Through Hole	J7	1	Samtec / DigiKey
BSS138	N-Channel MOSFET 50V 0.22A SOT-23	Q1	1	DigiKey
10K Resistor (0402)	Chip Resistor, 10 kOhms, +/-1%, 0402	R1, R2, R3	3	DigiKey / Mouser
330 Resistor (0402)	100mW Thin Film Resistor, 3302, 0402	R4, R5	2	DigiKey / Mouser
Tactile Switch	E-Switch SPST Round Button SMD	SW1	1	DigiKey / Mouser
AP2112K-3.3	0.6A 3.3V LDO Linear Regulator	U1	1	Mouser
AP2112K-1.8	0.6A 1.8V LDO Linear Regulator	U2	1	DigiKey
71V416 SRAM	3.3V 256K x 16 Async Static RAM	U3, U4	2	DigiKey
25MHz Oscillator	Abracon XO 25MHz 15pF CMOS 3.3V	Y1	1	DigiKey

Table 1: Simplified Bill of Materials

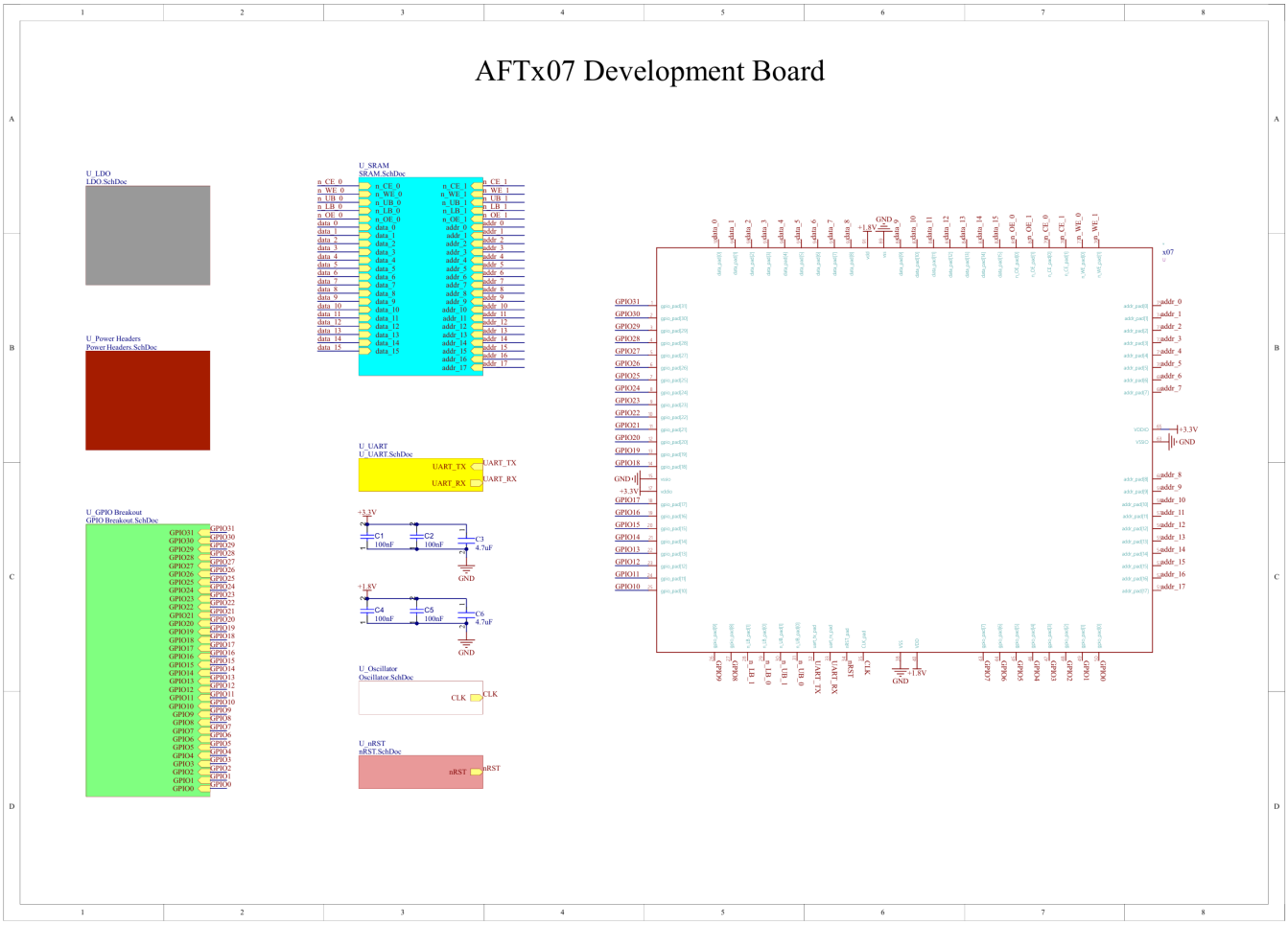

Figure 5: Full Hierarchical Board Schematic

References

[1] *AP2112 0.6A 3.3V/1.8V LDO Linear Regulator Datasheet*, Diodes Incorporated, 2023. [Online]. Available: https://www.mouser.com/datasheet/2/115/AP2112-271550.pdf

[2] *BSS138 N-Channel Logic Level Enhancement Mode Field Effect Transistor*, ON Semiconductor, 2021. [Online]. Available: https://www.onsemi.com/download/data-sheet/pdf/bss138-d.pdf

[3] *AN3520 Crystal Oscillators for SAMRH71F20 Rad-Hard Microcontroller Main Clock Input*, Microchip Technology, 2020. [Online]. Available: https://ww1.microchip.com/downloads/en/Appnotes/AN3520-Crystal-Oscillators-for-SAMRH71F20-Rad-Hard-Microcontroller-Main-Clock-Input-DS00003520C.pdf

[4] *ASE Series 3.2 x 2.5 x 1.2 mm SMD CMOS Crystal Oscillator*, Abracon, n.d. [Online]. Available: https://abracon.com/Oscillators/ASEseries.pdf

[5] *71V416 3.3V 256K x 16 Async Static RAM*, Renesas, 2021. [Online]. Available: https://renesasweb.s3.us-west-2.amazonaws.com/prod/docs/cached/X000/X0001657/20737-en.pdf

[6] H. W. Ott, *Electromagnetic Compatibility Engineering*. John Wiley & Sons, 2009.

A Teamwork

Kevin was responsible for schematic capture, layout, as well as contributing to deliverables. In the report, he was responsible for the design section, microarchitecture, results, and limitations. Aditya was responsible for schematic capture, routing, as well as contributing to deliverables. In the report, he was responsible for the abstract, introduction, conclusion, and formatting.