CONTINUED FROM PART- 1

INTRODUCTION

In view of the recent amendment made in the Designs (Amendment) Rules, 2008 with effect from 17/06/2008, Publication of the matter relating to Designs is being published in the Official Journal of The Patent Office. This Journal is being published on weekly basis on every Friday covering the various proceedings on Designs as required according to the provisions of under Rule 22, 25, 27 and 39 of the Design (Amendment) Rules, 2008. All the enquiries on this Official Journal and other information as required by the public should be addressed to the Controller General of Patents, Designs & Trade Marks. Suggestions and comments are requested from all quarters so that the content can be enriched.

DESIGN
CORRIGENDUM

(01)

The Registered Design No. 242734 which has been erroneously published in the official Journal of India dated 23/11/2012, part –II , at page 23564, column 2 in the name of JOSEPH VÃ¶GELE AG JOSEPH- VÃ¶GELE-STRASSE 1, 67067 LUDWIGSHAFEN/RHEIN, GERMANY Class 12-16, Date of Registration 31/01/2012, Titled as CONTROL PANEL FOR VEHICLE, Priority Number 001289920, Date 01/08/2011, Country EUROPEAN UNION should read as JOSEPH VÖGELE AG JOSEPH-VÖGELE-STRASSE 1, 67067 LUDWIGSHAFEN/RHEIN, GERMANY Class 12-16, Date of Registration 31/01/2012, Titled as CONTROL PANEL FOR VEHICLE, Priority Number 001289920, Date 01/08/2011, Country EUROPEAN UNION.

(02)

The Registered Design No. 242744 which has been erroneously published in the official Journal of India dated 23/11/2012, part –II , at page 23554, column 3 in the name of JOSEPH VÃ¶GELE AG JOSEPH- VÃ¶GELE-STRASSE 1, 67067 LUDWIGSHAFEN/RHEIN, GERMANY Class 12-16, Date of Registration 31/01/2012, Titled as CONTROL PANEL FOR VEHICLE, Priority Number 001289920, Date 01/08/2011, Country EUROPEAN UNION should read as JOSEPH VÖGELE AG JOSEPH- VÖGELE-STRASSE 1, 67067 LUDWIGSHAFEN/RHEIN, GERMANY Class 12-16, Date of Registration 31/01/2012, Titled as CONTROL PANEL FOR VEHICLE, Priority Number 001289920, Date 01/08/2011, Country EUROPEAN UNION.

(03)

The Registered Design No. 241660 which has been erroneously published in the official Journal of India dated 02/11/2012, part –II , at page 20932, column 2 in the name of CARTIER CREATION STUDIO SA., 8 BOULEVARD JAMES FAZY, CH-1201 GENEVE, SWITZERLAND Class 11-01, Date of Registration 22/12/2011, Titled as RING, Priority Number NÂ°DM/076 428, Date 22/06/2011, Country WIPO should read as CARTIER CREATION STUDIO SA., 8 BOULEVARD JAMES FAZY, CH-1201 GENEVE, SWITZERLAND Class 11-01, Date of Registration 22/12/2011, Titled as RING, Priority Number 610799201, Date 22/06/2011, Country WIPO.

DESIGN ACT 2000
(Under Section 31)
RECTIFICATION OF REGISTER

Stephen Raymond Guiney, a New Zealand citizen, New Zealand, filed a request on Form-17 on 22/02/2013 through their agent Manisha Singh Nair of Lex Orbis, New Delhi for the Rectification of name of the article and class number in respect of Regd. Design number 230215 under sec.31 of the said Act in the Register of Designs is as follows:-

Design No.	Entered name of the Article & Class number	Changed to
230215	CLIMBING AID (Article name) & 29-99 (Class number)	GARMENT FOR PROTECTION (Article name) & 02-99 (Class number)

Notice of opposition to the Rectification of Register of Designs may be given as per rule 40 of the Design Rules, 2001 as amended Design (amendment) Rules, 2008.

COPYRIGHT PUBLICATION

SL NO	CASE NUMBERS	RENEWED ON
1.	191662	14.03.2013
2.	191663	14.03.2013
3.	191664	14.03.2013
4.	191665	14.03.2013
5.	191666	14.03.2013
6.	191667	14.03.2013
7.	191668	14.03.2013
8.	191669	14.03.2013
9.	191670	14.03.2013
10.	191671	14.03.2013

THE DESIGNS ACT 2000
SECTION 30
DESIGN ASSIGNMENT

The Design stands in the name of R & D INDUSTRIES registered under the Designs Act, 2000 has been assigned in the Register of Designs in the name as follows:-

Design Nos.	Class	Name
198660, 198661	**12-08**	**RICHARD CHENE, A FRENCH CITIZEN, OF 137, BOULEVARD KOENIG-92200 NEUILLY SUR SEINE-FRANCE, DOMINIQUE DELAMOUR, A FRENCH CITIZEN, OF, 44, RUE DE LA MILLIERE-78490 LES MESNULS-FRANCE, ALAIN MIKLITARIAN, A FRENCH CITIZEN, OF, 5 VILLA COEUR DE VEY-75014 PARIS-FRANCE AND OLIVIER RODI, A FRENCH CITIZEN, OF, 17, RUE DU CHATEAU TROMPETTE-78950 GAMBAIS-FRANCE**

REGISTRATION OF DESIGNS

The following designs have been registered. They are now open for public inspection. In the following each entry the Date of Registration is shown. The Priority Number, Priority Date and Priority Country are also shown

DESIGN NUMBER	244847
CLASS	09-03
1)THE PROCTER & GAMBLE COMPANY ONE PROCTER & GAMBLE PLAZA, CINCINNATI, OHIO - 45202, UNITED STATES OF AMERICA	
DATE OF REGISTRATION	27/04/2012
TITLE	PACKAGING BOX

PRIORITY

PRIORITY NUMBER	DATE	COUNTRY
29/405,188	31/10/2011	U.S.A.

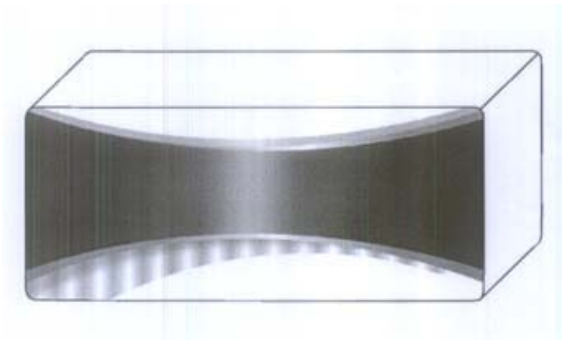

DESIGN NUMBER	248376
CLASS	06-01
1)GODREJ & BOYCE MFG. CO. LTD., AN INDIAN COMPANY INCORPORATED UNDER THE COMPANIES ACT 1913, OF GODREJ INTERIO, PLANT 4, PIROJSHANAGER, VIKHROLI (WEST), MUMBAI-400079, INDIA	
DATE OF REGISTRATION	28/09/2012
TITLE	BENCH
PRIORITY NA	

DESIGN NUMBER	248421
CLASS	02-02
1)X & O CLOTHING PVT. LTD., (AN INDIAN PRIVATE LIMITED COMPANY REGISTERED UNDER THE INDIAN COMPANIES ACT, 1956), OF 3, THAKUR COMPOUND, 1ST FLOOR, NEXT TO ABB, USV LTD., LANE, OFF. B.S. DEVSHI MARG, GOVANDI(EAST), MUMBAI-400088, MAHARASHTRA, INDIA	
DATE OF REGISTRATION	05/10/2012
TITLE	LADIES SUITS
PRIORITY NA	

DESIGN NUMBER	248046
CLASS	08-06
1)M/S. SANVI ENTERPRISE, A PARTNERSHIP FIRM OF GONDAL ROAD, HIGHWAY (N.H. 8-B), B/H, SAURASHTRA, SOLVENT, NR. DHOKIYA MOTORS, (KOTHARIYA), RAJKOT, GUJARAT, INDIA, WHOSE PARTNERS ARE KANJIBHAI NAGJIBHAI SAGPARIYA, YOGESHBHAI KANJIBHAI SAGPARIYA AND VIMAL KANJIBHAI SAGPARIYA	
DATE OF REGISTRATION	19/09/2012
TITLE	HANDLE
PRIORITY NA	

DESIGN NUMBER	248101
CLASS	31-00
1)HAVELLS INDIA LIMITED, AN INDIAN COMPANY, OF 1/7, RAM KISHORE ROAD, CIVIL LINES, DELHI-110054, INDIA	
DATE OF REGISTRATION	24/09/2012
TITLE	MIXER GRINDER SET
PRIORITY NA	

DESIGN NUMBER	247035
CLASS	23-04
1)PRADEEPKUMAR NANDLAL DHOOT, INDIAN NATIONAL OF GANGAPURWALA, 2275 ADAT BAZAR, AHMEDNAGAR-414001, MAHARASHTRA, INDIA	
DATE OF REGISTRATION	07/08/2012
TITLE	AIR COOLER
PRIORITY NA	

DESIGN NUMBER	247100
CLASS	06-11
1)MOHD. AZAD (PROPRIETOR), NATIONALITY INDIAN TRADING AS H.M. YOUSUF (INDIAN) WHOSE ADDRESS IS KHAMARIA, BHADOHI, UTTAR PRADESH-221306 (INDIA)	
DATE OF REGISTRATION	13/08/2012
TITLE	CARPET
PRIORITY NA	

DESIGN NUMBER	239685
CLASS	07-02
1)SUMIT KUMAR RZ-B55 BINDA PUR EXTENTION, UTTAM NAGAR NEW DELHI-110059, INDIA	
DATE OF REGISTRATION	23/09/2011
TITLE	TIFFIN BOX
PRIORITY NA	

DESIGN NUMBER	247666
CLASS	07-99
1)MA DESIGN INDIA PRIVATE LIMITED, A COMPANY INCORPORATED IN INDIA HAVING ITS PRINCIPAL PLACE OF BUSINESS AT A-41, SECTOR-80, PHASE-II, NOIDA-201305, U.P. INDIA	
DATE OF REGISTRATION	06/09/2012
TITLE	TRAY
PRIORITY NA	

DESIGN NUMBER	245725
CLASS	23-01
1)SUMITOMO CHEMICAL COMPANY, LIMITED, A CORPORATION ORGANIZED UNDER THE LAWS OF JAPAN, OF 27-1, SHINKAWA 2-CHOME, CHUO-KU, TOKYO 104-8260, JAPAN	
DATE OF REGISTRATION	05/06/2012
TITLE	PARTICULATE FILTER

PRIORITY

PRIORITY NUMBER	DATE	COUNTRY
2011-028455	07/12/2011	JAPAN

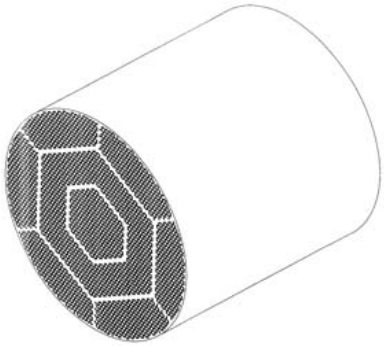

DESIGN NUMBER	243024
CLASS	24-04
1)MCNEIL-PPC, INC 199 GRANDVIEW ROAD, SKILLMAN, NJ 08558, USA	
DATE OF REGISTRATION	10/02/2012
TITLE	SANITARY NAPKIN

PRIORITY

PRIORITY NUMBER	DATE	COUNTRY
29/399, 339	12/08/2011	U.S.A.

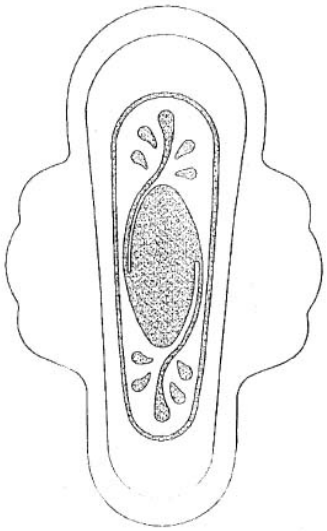

DESIGN NUMBER	248051
CLASS	08-06
1)M/S. SANVI ENTERPRISE, A PARTNERSHIP FIRM OF GONDAL ROAD, HIGHWAY (N.H. 8-B), B/H, SAURASHTRA, SOLVENT, NR. DHOKIYA MOTORS, (KOTHARIYA), RAJKOT, GUJARAT, INDIA, WHOSE PARTNERS ARE KANJIBHAI NAGJIBHAI SAGPARIYA, YOGESHBHAI KANJIBHAI SAGPARIYA AND VIMAL KANJIBHAI SAGPARIYA	
DATE OF REGISTRATION	19/09/2012
TITLE	HANDLE

PRIORITY NA

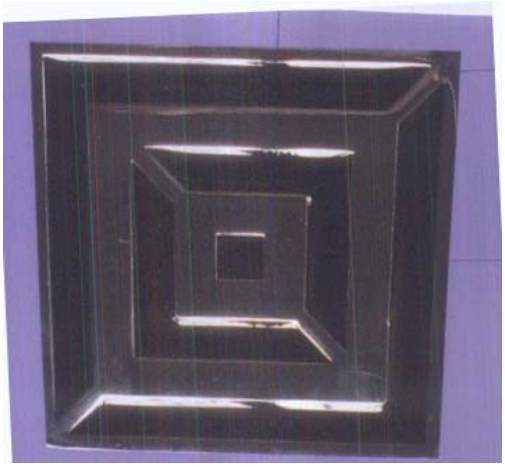

DESIGN NUMBER	245303
CLASS	13-03
1)BMC ELECTROPLAST PVT. LTD., A COMPANY INCORPORATED UNDER THE COMPANIES ACT, 1956 WHOSE ADDRESS IS K-133 MIDC, WALUJ, AURANGABAD 431136, MAHARASHTRA, INDIA	
DATE OF REGISTRATION	14/05/2012
TITLE	DRIVE FOR VACUUM CIRCUIT BREAKER
PRIORITY NA	

DESIGN NUMBER	247020
CLASS	10-07
1)LA MONTRE HERMES S.A., A SWISS SOCIÃ©TÃ© ANONYME, ERLENSTRASSE 31 A, CH-2555, BRÃ¼GG, SWITZERLAND	
DATE OF REGISTRATION	07/08/2012
TITLE	DIAL FOR A TIMEPIECE

PRIORITY

PRIORITY NUMBER	DATE	COUNTRY
652699501	13/02/2012	WIPO

DESIGN NUMBER	247043
CLASS	09-01
1)JITENDER KUMAR ANAND (AN INDIAN NATIONAL), 1485/104, TRI NAGAR, DELHI-110035	
DATE OF REGISTRATION	08/08/2012
TITLE	JAR

PRIORITY NA

DESIGN NUMBER	247104
CLASS	06-11
1)MOHD. AZAD (PROPRIETOR), NATIONALITY INDIAN TRADING AS H.M. YOUSUF (INDIAN) WHOSE ADDRESS IS KHAMARIA, BHADOHI, UTTAR PRADESH-221306 (INDIA)	
DATE OF REGISTRATION	13/08/2012
TITLE	CARPET
PRIORITY NA	

DESIGN NUMBER	244653
CLASS	13-03
1)ENSTO INDIA PRIVATE LIMITED PLOT NO. 241-242, SECTOR-6, IMT MANESAR, GURGAON, HARYANA, INDIA	
DATE OF REGISTRATION	17/04/2012
TITLE	PHASE MARKER KIT
PRIORITY NA	

DESIGN NUMBER	247975
CLASS	12-16
1)SHUBHAM SACHDEVA, (AN INDIAN NATIONAL), TRADING AS M/S. V.E. POLYMER, K-14, SAWAN PARK, ASHOK VIHAR, DELHI-110052	
DATE OF REGISTRATION	17/09/2012
TITLE	MOTORCYCLE LUGGAGE BOX
PRIORITY NA	

DESIGN NUMBER	248047
CLASS	08-06
1)M/S. SANVI ENTERPRISE, A PARTNERSHIP FIRM OF GONDAL ROAD, HIGHWAY (N.H. 8-B), B/H, SAURASHTRA, SOLVENT, NR. DHOKIYA MOTORS, (KOTHARIYA), RAJKOT, GUJARAT, INDIA, WHOSE PARTNERS ARE KANJIBHAI NAGJIBHAI SAGPARIYA, YOGESHBHAI KANJIBHAI SAGPARIYA AND VIMAL KANJIBHAI SAGPARIYA	
DATE OF REGISTRATION	19/09/2012
TITLE	HANDLE
PRIORITY NA	

DESIGN NUMBER	248102
CLASS	31-00
1)HAVELLS INDIA LIMITED, AN INDIAN COMPANY, OF 1/7, RAM KISHORE ROAD, CIVIL LINES, DELHI-110054, INDIA	
DATE OF REGISTRATION	24/09/2012
TITLE	MIXER GRINDER SET
PRIORITY NA	

DESIGN NUMBER	242326
CLASS	08-06
1)SURAJ METAL 4, PARSANA SOCIETY, NR. 73, SCHOOL RAJKOT, GUJARAT, INDIA	
DATE OF REGISTRATION	19/01/2012
TITLE	HANDLE
PRIORITY NA	

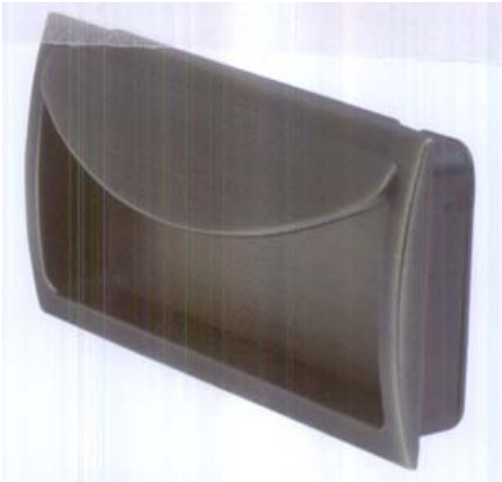

DESIGN NUMBER	246659
CLASS	15-05
1)ORIENT PAPER & INDUSTRIES LIMITED, OF UNIT Â€“ VIII, PLOT NO. 7, BHOINAGAR, BHUBANESHWAR-751012 (ORISSA),, INDIA, AN INDIAN COMPANY	
DATE OF REGISTRATION	20/07/2012
TITLE	DRY IRON
PRIORITY NA	

DESIGN NUMBER	244149
CLASS	12-11
1)HERO CYCLES LIMITED HERO NAGAR, G. T. ROAD, LUDHIANAÂ€“141003, PUNJAB, INDIA	
DATE OF REGISTRATION	27/03/2012
TITLE	BICYCLE
PRIORITY NA	

DESIGN NUMBER	247055
CLASS	13-03
1)YAZAKI CORPORATION, A JAPANESE CORPORATION OF 4-28 MITA 1-CHOME, MINATO-KU, TOKYO 108-0073, JAPAN	
DATE OF REGISTRATION	08/08/2012
TITLE	ENGAGING LEVER FOR ELECTRIC CONNECTOR

PRIORITY

PRIORITY NUMBER	DATE	COUNTRY
2012-002927	13/02/2012	JAPAN

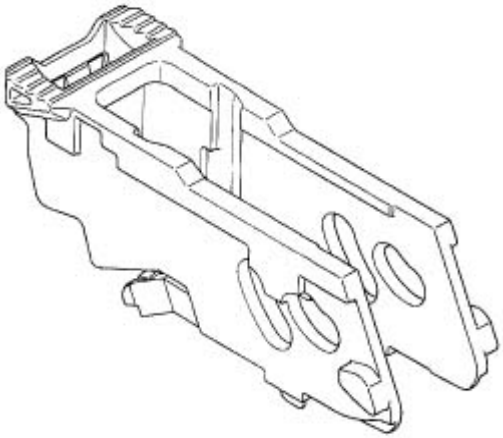

DESIGN NUMBER	247101
CLASS	06-11
1)MOHD. AZAD (PROPRIETOR), NATIONALITY INDIAN TRADING AS H.M. YOUSUF (INDIAN) WHOSE ADDRESS IS KHAMARIA, BHADOHI, UTTAR PRADESH-221306 (INDIA)	
DATE OF REGISTRATION	13/08/2012
TITLE	CARPET
PRIORITY NA	

DESIGN NUMBER	247668
CLASS	07-99
1)MA DESIGN INDIA PRIVATE LIMITED, A COMPANY INCORPORATED IN INDIA HAVING ITS PRINCIPAL PLACE OF BUSINESS AT A-41, SECTOR-80, PHASE-II, NOIDA-201305, U.P. INDIA	
DATE OF REGISTRATION	06/09/2012
TITLE	TRAY
PRIORITY NA	

DESIGN NUMBER	247677
CLASS	09-07
1)MA DESIGN INDIA PRIVATE LIMITED, A COMPANY INCORPORATED IN INDIA HAVING ITS PRINCIPAL PLACE OF BUSINESS AT A-41, SECTOR-80, PHASE-II, NOIDA-201305, U.P. INDIA	
DATE OF REGISTRATION	06/09/2012
TITLE	STOPPER FOR BOTTLE
PRIORITY NA	

DESIGN NUMBER	245726
CLASS	23-01

1)SUMITOMO CHEMICAL COMPANY, LIMITED, A CORPORATION ORGANIZED UNDER THE LAWS OF JAPAN,
OF 27-1, SHINKAWA 2-CHOME, CHUO-KU, TOKYO 104-8260, JAPAN

DATE OF REGISTRATION	05/06/2012
TITLE	PARTICULATE FILTER

PRIORITY

PRIORITY NUMBER	DATE	COUNTRY
2011-028456	07/12/2011	JAPAN

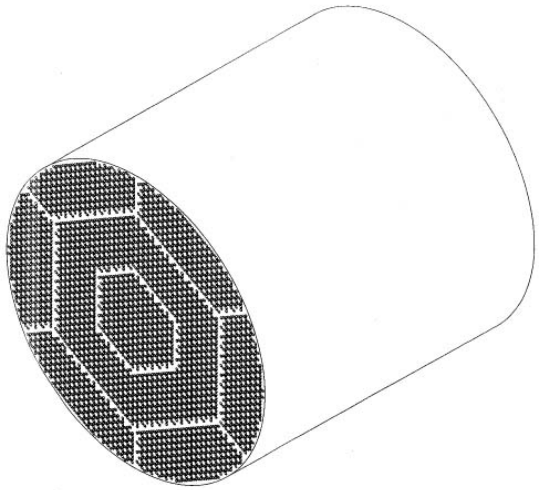

DESIGN NUMBER	245444
CLASS	27-99

1)PHILIPS MORRIS PRODUCTS S.A.,
QUAI JEANRENAUD 3, 2000 NEUCHATEL, SWITZERLAND

DATE OF REGISTRATION	21/05/2012
TITLE	SMOKERSÂ€™ ACCESSORIES

PRIORITY

PRIORITY NUMBER	DATE	COUNTRY
001303150-0001	21/11/2011	OHIM

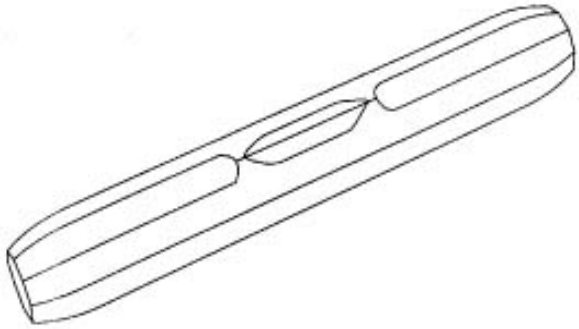

DESIGN NUMBER	248438
CLASS	12-11

1)EASTMAN INDUSTRIES LIMITED, C-87, PHASE-V, FOCAL POINT, LUDHIANA-141010 (PUNJAB) (INDIA)
(AN INDIAN COMPANY DULY REGISTERED UNDER THE COMPANIES ACT, 1956) OF THE ABOVE ADDRESS

DATE OF REGISTRATION	03/10/2012
TITLE	FOOT REST FOR BICYCLE

PRIORITY NA

DESIGN NUMBER	244359	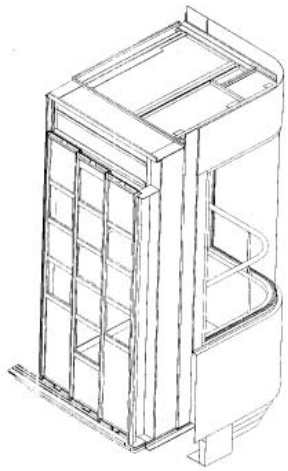
CLASS	12-05	
1)KUMALIFT ENGINEERING LABORATORY CO., LTD. 15-47, MINAMIBEFUCHO, SETTSU-SHI, OSAKA, 5660045, JAPAN		
DATE OF REGISTRATION	02/04/2012	
TITLE	ELEVATOR CAR	
PRIORITY NA		

DESIGN NUMBER	244654	
CLASS	13-03	
1)ENSTO INDIA PRIVATE LIMITED PLOT NO. 241-242, SECTOR-6, IMT MANESAR, GURGAON, HARYANA, INDIA		
DATE OF REGISTRATION	17/04/2012	
TITLE	INSULATION PIERCING CONNECTOR FOR PHASE INDICATION	
PRIORITY NA		

DESIGN NUMBER	247979	
CLASS	19-06	
1)ADD CORPORATION LIMITED OF BUSINESS PARK, 6TH FLOOR, CHINCHOLI NAKA, S.V. ROAD, MALAD (WEST), MUMBAI-400064, MAHARASHTRA, INDIA, INDIAN COMPANY		
DATE OF REGISTRATION	18/09/2012	
TITLE	WRITING INSTRUMENT	
PRIORITY NA		

DESIGN NUMBER	248049
CLASS	08-06
1)M/S. SANVI ENTERPRISE, A PARTNERSHIP FIRM OF GONDAL ROAD, HIGHWAY (N.H. 8-B), B/H, SAURASHTRA, SOLVENT, NR. DHOKIYA MOTORS, (KOTHARIYA), RAJKOT, GUJARAT, INDIA, WHOSE PARTNERS ARE KANJIBHAI NAGJIBHAI SAGPARIYA, YOGESHBHAI KANJIBHAI SAGPARIYA AND VIMAL KANJIBHAI SAGPARIYA	
DATE OF REGISTRATION	19/09/2012
TITLE	HANDLE
PRIORITY NA	

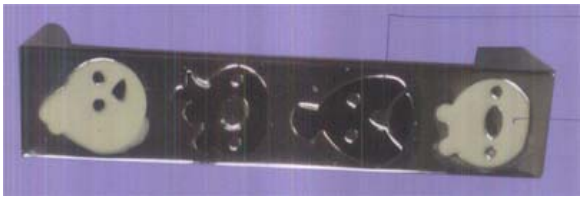

DESIGN NUMBER	248108
CLASS	31-00
1)HAVELLS INDIA LIMITED, AN INDIAN COMPANY, OF 1/7, RAM KISHORE ROAD, CIVIL LINES, DELHI-110054, INDIA	
DATE OF REGISTRATION	24/09/2012
TITLE	MIXER GRINDER JAR
PRIORITY NA	

DESIGN NUMBER	225371
CLASS	08-09
1)DORMA GMBH+ CO. KG. DORMA PLATZ 1, D 58256 ENNEPETAL, GERMANY	
DATE OF REGISTRATION	16/10/2009
TITLE	STRYCTURAL METAL FITTING
PRIORITY NA	

DESIGN NUMBER	247042
CLASS	02-04
1)RISHI MAHAJAN AN INDIAN NATIONAL, TRADING AS M/S. SMASH SHOE (INDIA), G-9, DSIDC INDUSTRIAL COMPLEX, ROHTAK ROAD, NANGLOI, DELHI-110041	
DATE OF REGISTRATION	08/08/2012
TITLE	SHOE
PRIORITY NA	

DESIGN NUMBER	247102
CLASS	06-11
1)MOHD. AZAD (PROPRIETOR), NATIONALITY INDIAN TRADING AS H.M. YOUSUF (INDIAN) WHOSE ADDRESS IS KHAMARIA, BHADOHI, UTTAR PRADESH-221306 (INDIA)	
DATE OF REGISTRATION	13/08/2012
TITLE	CARPET
PRIORITY NA	

DESIGN NUMBER	247139
CLASS	08-06
1)DIVYESHBHAI BARASIYA AN INDIAN NATIONAL SOLE PROPRIETOR OF SHREE TECHNOCAST AN INDIAN PROPRIETORSHIP FIRM HAVING ITS PRINCIPAL PLACE OF BUSINESS AT AJI GIDC, SHED NO. K-1-242/5, MAL-TECH CHOWK, NR. TARBO BEARING, RAJKOT-3, GUJARAT-INDIA	
DATE OF REGISTRATION	13/08/2012
TITLE	HANDLE
PRIORITY NA	

DESIGN NUMBER	247680
CLASS	07-06
1)MA DESIGN INDIA PRIVATE LIMITED, A COMPANY INCORPORATED IN INDIA HAVING ITS PRINCIPAL PLACE OF BUSINESS AT A-41, SECTOR-80, PHASE-II, NOIDA-201305, U.P. INDIA	
DATE OF REGISTRATION	06/09/2012
TITLE	NAPKIN HOLDER
PRIORITY NA	

DESIGN NUMBER	245854
CLASS	24-02
1)GENERAL ELECTRIC COMPANY, A NEW YORK CORPORATION INCORPORATED UNDER THE LAWS OF UNITED STATES OF AMERICA HAVING ITS OFFICE AT 1 RIVER ROAD, SCHENECTADY, NEW YORK 12345 UNITED STATES OF AMERICA	
DATE OF REGISTRATION	11/06/2012
TITLE	MEDICAL IMAGING SYSTEM TABLE
PRIORITY NA	

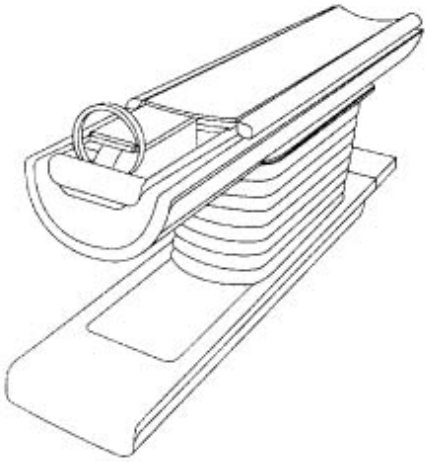

DESIGN NUMBER	245550
CLASS	01-01
1)SOREMARTEC S.A., A BELGIAN JOINT STOCK COMPANY OF RUE JOSEPH NETZER 5, B-6700 ARLON, BELGIUM	
DATE OF REGISTRATION	23/05/2012
TITLE	SNACK FOOD PRODUCT

PRIORITY

PRIORITY NUMBER	DATE	COUNTRY
WIPO9105_SORE	25/11/2011	WIPO

DESIGN NUMBER	246081
CLASS	28-03
1)YOSEF GROSS, MOSHAV MAZOR, ISRAEL, A NATIONAL OF ISRAEL AND NOAH AMIT, HAIFA, ISRAEL, A NATIONAL OF ISRAEL	
DATE OF REGISTRATION	21/06/2012
TITLE	ANTI-WRINKLE APPLIANCE
PRIORITY NA	

DESIGN NUMBER	248045
CLASS	08-06
1)M/S. SANVI ENTERPRISE, A PARTNERSHIP FIRM OF GONDAL ROAD, HIGHWAY (N.H. 8-B), B/H, SAURASHTRA, SOLVENT, NR. DHOKIYA MOTORS, (KOTHARIYA), RAJKOT, GUJARAT, INDIA, WHOSE PARTNERS ARE KANJIBHAI NAGJIBHAI SAGPARIYA, YOGESHBHAI KANJIBHAI SAGPARIYA AND VIMAL KANJIBHAI SAGPARIYA	
DATE OF REGISTRATION	19/09/2012
TITLE	HANDLE
PRIORITY NA	

DESIGN NUMBER	248098
CLASS	13-03
1)1) MR. LALIT T. GWALANI AND 2) MRS. SUNITA R. GWALANI, PARTNERS-INDIAN NATIONAL, TRADING AS DOSSAN ENGINEERING COMPANY, A REGISTERED PARTNERSHIP FIRM IN INDIA, HAVING ITS REGISTERED OFFICE AT 205, BAJSON INDUSTRIAL ESTATE, 40, CHAKALA ROAD, ANDHERI (EAST), MUMBAI 400099, STATE OF MAHARASHTRA, INDIA, OF ABOVE ADDRESS	
DATE OF REGISTRATION	24/09/2012
TITLE	SOCKET
PRIORITY NA	

DESIGN NUMBER	248375
CLASS	06-01
1)GODREJ & BOYCE MFG. CO. LTD., AN INDIAN COMPANY INCORPORATED UNDER THE COMPANIES ACT 1913, OF GODREJ INTERIO, PLANT 4, PIROJSHANAGER, VIKHROLI (WEST), MUMBAI-400079, INDIA	
DATE OF REGISTRATION	28/09/2012
TITLE	BENCH
PRIORITY NA	

DESIGN NUMBER	244053
CLASS	23-04
1)MOVING SUN LIMITED MILL COURT FEATHERSTONE ROAD, MK12 5EU, WOLVERTON, MILTON KEYNES, UNITED KINGDOM	
DATE OF REGISTRATION	22/03/2012
TITLE	AIR STERALIZING APPARATUS

PRIORITY

PRIORITY NUMBER	DATE	COUNTRY
001295836-0001	28/09/2011	OHIM

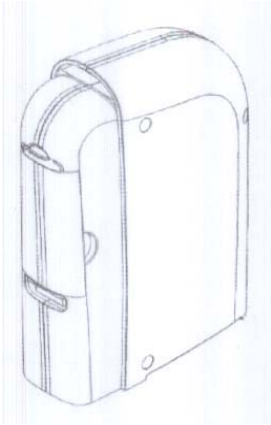

DESIGN NUMBER	247098
CLASS	09-07
1)DP PLASTOWORLD., (A PARTNERSHIP FIRM REGISTERED UNDER INDIAN PARTNERSHIP ACT, 1932), AT PLOT NO. A/1, 187, G.I.D.C. INDUSTRIAL ESTATE, UMARGAON, TALUKA-PARDI, DIST-VALSAD (GUJARAT). INDIA. WHOSE PARTNERS ARE (1) DHIREN SHAH. (INDIAN NATIONAL), (2) TEJAS SHAH. (INDIAN NATIONAL), & (3) CHIRAG SHAH. (INDIAN NATIONAL), ALL ARE HAVING ABOVE ADDRESS	
DATE OF REGISTRATION	09/08/2012
TITLE	BOTTLE CAP
PRIORITY NA	

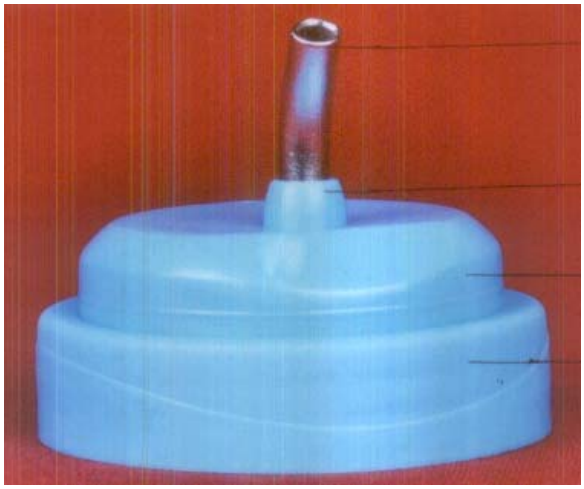

DESIGN NUMBER	247690
CLASS	07-06
1)MA DESIGN INDIA PRIVATE LIMITED, A COMPANY INCORPORATED IN INDIA HAVING ITS PRINCIPAL PLACE OF BUSINESS AT A-41, SECTOR-80, PHASE-II, NOIDA-201305, U.P. INDIA	
DATE OF REGISTRATION	06/09/2012
TITLE	HOLDER (FOR SUGAR)
PRIORITY NA	

DESIGN NUMBER	245647
CLASS	15-01
1)USUI KOKUSAI SANGYO KAISHA LIMITED, A CORPORATION ORGANIZED AND EXISTING UNDER THE LAWS OF JAPAN OF 131-2 NAGASAWA, SHIMIZU-CHO, SUNTO-GUN, SHIZUOKA 411-8610, JAPAN	
DATE OF REGISTRATION	30/05/2012
TITLE	HIGH PRESSURE FUEL PIPE FOR ENGINES

PRIORITY

PRIORITY NUMBER	DATE	COUNTRY
2012-004315	28/02/2012	JAPAN

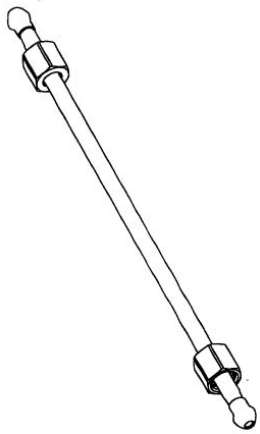

DESIGN NUMBER	248869
CLASS	23-03
1)1. KISHORE REDDY KOMMAREDDY NO. 2-40/1, CHURCH BAZAAR, MATTAMPALLY VILLAGE & MANDAL NALGONDA, ANDHRA PRADESH-508204 AN INDIAN NATIONAL AND 2. SUDHEER REDDY GADE NO. 1-47, CHURCH BAZAAR, MATTAMPALLY VILLAGE & MANDAL NALGONDA, ANDHRA PRADESH-508204 AN INDIAN NATIONAL	
DATE OF REGISTRATION	18/10/2012
TITLE	BIO-GAS DIGESTER
PRIORITY NA	

DESIGN NUMBER	241356
CLASS	15-01
1)TRIVENI TURBINE LIMITED 12A, PEENYA INDUSTRIAL AREA, BANGLORE-560058	
DATE OF REGISTRATION	09/12/2011
TITLE	GUIDE BLADE CARRIER OF A STEAM TURBINE
PRIORITY NA	

DESIGN NUMBER	245330
CLASS	09-01
1)SAVERGLASS, A FRENCH COMPANY OF 3 RUE DE LA GARE, 60960 FEUQUIERES, FRANCE	
DATE OF REGISTRATION	15/05/2012
TITLE	BOTTLE

PRIORITY

PRIORITY NUMBER	DATE	COUNTRY
001949397-0001	18/11/2011	OHIM

DESIGN NUMBER	248044
CLASS	08-06
1)M/S. SANVI ENTERPRISE, A PARTNERSHIP FIRM OF GONDAL ROAD, HIGHWAY (N.H. 8-B), B/H, SAURASHTRA, SOLVENT, NR. DHOKIYA MOTORS, (KOTHARIYA), RAJKOT, GUJARAT, INDIA, WHOSE PARTNERS ARE KANJIBHAI NAGJIBHAI SAGPARIYA, YOGESHBHAI KANJIBHAI SAGPARIYA AND VIMAL KANJIBHAI SAGPARIYA	
DATE OF REGISTRATION	19/09/2012
TITLE	HANDLE
PRIORITY NA	

DESIGN NUMBER	248093
CLASS	13-03

1)1) MR. LALIT T. GWALANI AND 2) MRS. SUNITA R. GWALANI, PARTNERS-INDIAN NATIONAL, TRADING AS DOSSAN ENGINEERING COMPANY, A REGISTERED PARTNERSHIP FIRM IN INDIA, HAVING ITS REGISTERED OFFICE
AT 205, BAJSON INDUSTRIAL ESTATE, 40, CHAKALA ROAD, ANDHERI (EAST), MUMBAI 400099, STATE OF MAHARASHTRA, INDIA, OF ABOVE ADDRESS

DATE OF REGISTRATION	24/09/2012
TITLE	SOCKET

PRIORITY NA

DESIGN NUMBER	244800
CLASS	28-03

1)ELC MANAGEMENT LLC
767 FIFTH AVENUE, NEW YORK, NEW YORK 10153, USA

DATE OF REGISTRATION	25/04/2012
TITLE	LASH TESTER WAND

PRIORITY

PRIORITY NUMBER	DATE	COUNTRY
29/406,640	17/11/2011	U.S.A.

DESIGN NUMBER	248372
CLASS	06-03

1)GODREJ & BOYCE MFG. CO. LTD., AN INDIAN COMPANY INCORPORATED UNDER THE COMPANIES ACT 1913,
OF GODREJ INTERIO, PLANT 4, PIROJSHANAGER, VIKHROLI (WEST), MUMBAI-400079, INDIA

DATE OF REGISTRATION	28/09/2012
TITLE	DESK

PRIORITY NA

DESIGN NUMBER	247029
CLASS	09-01
1)PRAMIT SANGHAVI AND DEWANG SANGHAVI, PARTNERS TRADING AS V2 CORP., A PARTNERSHIP FIRM, MANUFACTURERS AND MERCHANTS, WHOSE ADDRESS IS WZ-8/1, INDUSTRIAL AREA, KIRTI NAGAR, NEW DELHI-110015, INDIA	
DATE OF REGISTRATION	07/08/2012
TITLE	JAR
PRIORITY NA	

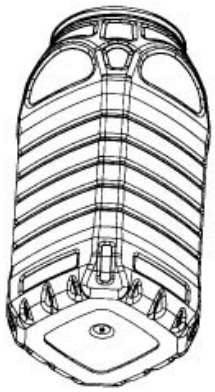

DESIGN NUMBER	247051
CLASS	26-04
1)LIGHTING SCIENCE GROUP CORPORATION, A COMPANY ORGANIZED AND EXISTING UNDER THE LAWS OF UNITED STATES OF AMERICA, OF THE ADDRESS 1227 SOUTH PATRICK DRIVE, BLDG. 2A, SATELLITE BEACH, FL 32937, UNITED STATES OF AMERICA	
DATE OF REGISTRATION	08/08/2012
TITLE	LUMINAIRE

PRIORITY

PRIORITY NUMBER	DATE	COUNTRY
29/413,186	13/02/2012	U.S.A.

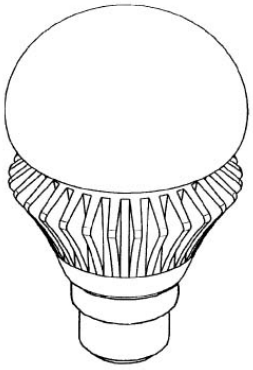

DESIGN NUMBER	247689
CLASS	07-06
1)MA DESIGN INDIA PRIVATE LIMITED, A COMPANY INCORPORATED IN INDIA HAVING ITS PRINCIPAL PLACE OF BUSINESS AT A-41, SECTOR-80, PHASE-II, NOIDA-201305, U.P. INDIA	
DATE OF REGISTRATION	06/09/2012
TITLE	HOLDER (FOR SUGAR)
PRIORITY NA	

DESIGN NUMBER	245646
CLASS	15-01
1)USUI KOKUSAI SANGYO KAISHA LIMITED, A CORPORATION ORGANIZED AND EXISTING UNDER THE LAWS OF JAPAN OF 131-2 NAGASAWA, SHIMIZU-CHO, SUNTO-GUN, SHIZUOKA 411-8610, JAPAN	
DATE OF REGISTRATION	30/05/2012
TITLE	HIGH PRESSURE FUEL PIPE FOR ENGINES

PRIORITY

PRIORITY NUMBER	DATE	COUNTRY
2012-004314	28/02/2012	JAPAN

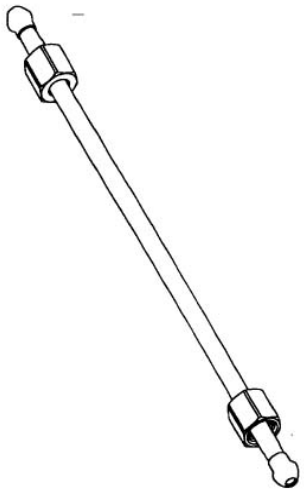

DESIGN NUMBER	245329
CLASS	09-01
1)SAVERGLASS, A FRENCH COMPANY OF 3 RUE DE LA GARE, 60960 FEUQUIERES, FRANCE	
DATE OF REGISTRATION	15/05/2012
TITLE	BOTTLE

PRIORITY

PRIORITY NUMBER	DATE	COUNTRY
001949314-0001	18/11/2011	OHIM

DESIGN NUMBER	245376
CLASS	15-99
1)KABUSHIKI KAISHA YASKAWA DENKI A JAPANESE COMPANY OF THE ADDRESS: 2-1, KUROSAKI-SHIROISHI, YAHATANISHI-KU, KITAKYUSHU-SHI, FUKUOKA 806-0004, JAPAN	
DATE OF REGISTRATION	16/05/2012
TITLE	ROBOT

PRIORITY NA

DESIGN NUMBER	246040
CLASS	24-02

1)DR. ZAHRA HUSSAINI, INDIAN INHABITANT, HAVING HER OFFICE
AT B 33, NEW PETIT MANSION, SLEATER ROAD, NANA CHOWK, MUMBAI-400007, STATE OF MAHARASHTRA, INDIA, OF ABOVE ADDRESS

DATE OF REGISTRATION	19/06/2012
TITLE	DIAGNOSTIC TOOL

PRIORITY NA

DESIGN NUMBER	247983
CLASS	06-04

1)NAVRANG INNOVATIONS., (AN INDIAN SOLE PROPRIETORSHIP CONCERN), HAVING OFFICE AT 207, SONAL INDUSTRIAL ESTATE, RAMCHANDRA LANE EXTM., MALAD (WEST), MUMBAI-400064, MAHARASHTRA, INDIA.
WHOSE PROPRIETOR IS NAVNEET MEHTA (INDIAN NATIONAL) OF ABOVE ADDRESS

DATE OF REGISTRATION	18/09/2012
TITLE	CABINET (STORAGE)

PRIORITY NA

DESIGN NUMBER	241134
CLASS	03-01

1)GREGORY JOSEPH SANCHEZ
518 E. MEAD PLACE, CHANDLER, ARIZONA 8529, UNITED STATES OF AMERICA

DATE OF REGISTRATION	30/11/2011
TITLE	LUGGAGE WRAP.

PRIORITY

PRIORITY NUMBER	DATE	COUNTRY
1-280-168-0001	08/06/2011	OHIM

DESIGN NUMBER	248371
CLASS	06-03
1)GODREJ & BOYCE MFG. CO. LTD., AN INDIAN COMPANY INCORPORATED UNDER THE COMPANIES ACT 1913, OF GODREJ INTERIO, PLANT 4, PIROJSHANAGER, VIKHROLI (WEST), MUMBAI-400079, INDIA	
DATE OF REGISTRATION	28/09/2012
TITLE	DESK
PRIORITY NA	

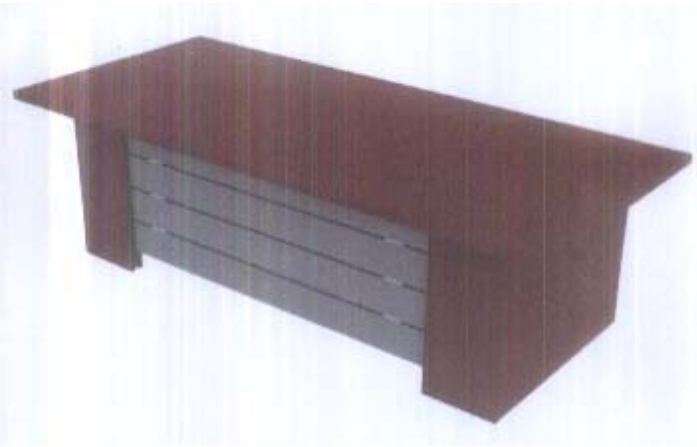

DESIGN NUMBER	240558
CLASS	24-99
1)MR. NITIN MAHAJAN 1-D, MANHAR MAHAL, 4, BAKUL BAGAN ROW, BEHIND LANSDOWNE MKT, KOLKATA-700025, WEST BENGAL, INDIA	
DATE OF REGISTRATION	02/11/2011
TITLE	"Y-MEDICATION PORT FOR CAPD BAGS"
PRIORITY NA	

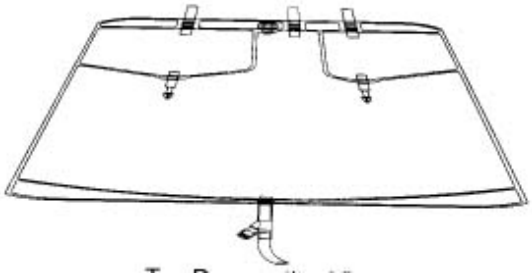

DESIGN NUMBER	245043
CLASS	09-01
1)M/S. JYOTI PLAST SEA VIEW C.H.S., 1/A-5, RAM NAGAR, OFF. S. V. ROAD, BORIVALI WEST, MUMBAI-400092, MAHARASHTRA, INDIA	
DATE OF REGISTRATION	30/04/2012
TITLE	BOTTLE
PRIORITY NA	

DESIGN NUMBER	244217	
CLASS	09-01	
1)M/S. HARSH IMPEX CENTRE POINT BUILDING, 21, HEMANTA BASU SARANI, 3RD FLOOR, SUITE NO-321, KOLKATA-700001		
DATE OF REGISTRATION	29/03/2012	
TITLE	BOTTLE	
PRIORITY NA		

DESIGN NUMBER	247024	
CLASS	09-03	
1)BLUEPLAST INDUSTRIES LIMITED, A COMPANY INCORPORATED IN INDIA OF 113/114, VIVEK INDUSTRIAL ESTATE, USWALA ROAD, CAMA ESTATE, GOREGAON (E), MUMBAI Â€“ 400063, MAHARASHTRA, INDIA		
DATE OF REGISTRATION	07/08/2012	
TITLE	CONTAINER	
PRIORITY NA		

DESIGN NUMBER	247672	
CLASS	09-07	
1)MA DESIGN INDIA PRIVATE LIMITED, A COMPANY INCORPORATED IN INDIA HAVING ITS PRINCIPAL PLACE OF BUSINESS AT A-41, SECTOR-80, PHASE-II, NOIDA-201305, U.P. INDIA		
DATE OF REGISTRATION	06/09/2012	
TITLE	STOPPER FOR BOTTLE	
PRIORITY NA		

DESIGN NUMBER	247688
CLASS	07-03
1)MA DESIGN INDIA PRIVATE LIMITED, A COMPANY INCORPORATED IN INDIA HAVING ITS PRINCIPAL PLACE OF BUSINESS AT A-41, SECTOR-80, PHASE-II, NOIDA-201305, U.P. INDIA	
DATE OF REGISTRATION	06/09/2012
TITLE	SPOON
PRIORITY NA	

DESIGN NUMBER	245645
CLASS	15-01
1)USUI KOKUSAI SANGYO KAISHA LIMITED, A CORPORATION ORGANIZED AND EXISTING UNDER THE LAWS OF JAPAN OF 131-2 NAGASAWA, SHIMIZU-CHO, SUNTO-GUN, SHIZUOKA 411-8610, JAPAN	
DATE OF REGISTRATION	30/05/2012
TITLE	HIGH PRESSURE FUEL PIPE FOR ENGINES

PRIORITY

PRIORITY NUMBER	DATE	COUNTRY
2012-004299	28/02/2012	JAPAN

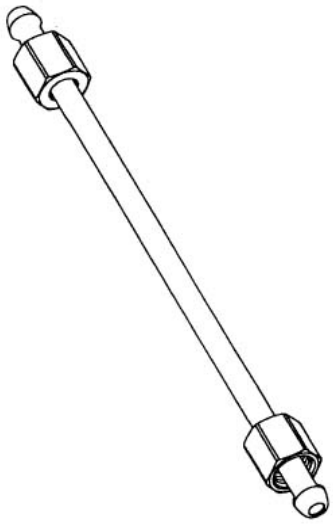

DESIGN NUMBER	243027
CLASS	12-16
1)PANASONIC CORPORATION 1006, OAZA KADOMA, KADOMA-SHI, OSAKA 571-8501, JAPAN	
DATE OF REGISTRATION	10/02/2012
TITLE	PORTABLE DEVICE HOLDER ATTACHMENT FOR AUTOMOBILE

PRIORITY

PRIORITY NUMBER	DATE	COUNTRY
2011-018426	11/08/2011	JAPAN

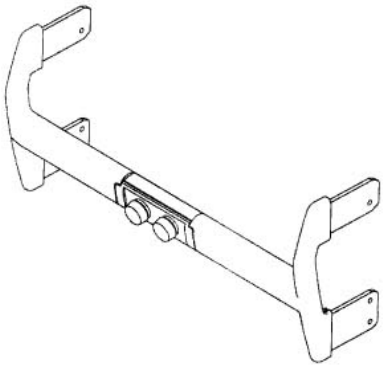

DESIGN NUMBER	247982
CLASS	03-01
1)GANPAT KISTURCHAND JANGID. (INDIAN NATIONAL) HAVING OFFICE AT 13, PUNIT APARTMENT. GROUND FLOOR, CAMA LANE, NEAR JAIN HOSTEL, GHATKOPAR (WEST), MUMBAI-400086, MAHARASHTRA, INDIA	
DATE OF REGISTRATION	18/09/2012
TITLE	JEWELLERY BOX
PRIORITY NA	

DESIGN NUMBER	248123
CLASS	08-06
1)JEYANTIBHAI DAHYABHAI PIPALIYA (ADULT AND INDIAN NATIONAL) SOLE PROPRIETOR OF AVADH MANUFACTURE (INDIAN PROPRIETORSHIP CONCERN) HAVING PLACE OF BUSINESS AT: 1, PATEL NAGAR, NR. RAJARAM TEMPLE, KOTHARIYA MAIN ROAD, RAJKOT-360002-GUJARAT (INDIA)	
DATE OF REGISTRATION	25/09/2012
TITLE	HANDLE
PRIORITY NA	

DESIGN NUMBER	248124
CLASS	08-06
1)DHARMESHBHAI MANSUKHBHAI PATEL (INDIAN NATIONALS) SOLE PROPRIETOR OF SAHARA SALES CORPORATION (INDIAN PROPRIETORSHIP CONCERN) HAVING PLACE OF BUSINESS AT Â€“ 5, SORATHIYAWADI, OPP: RAIYARAJ MANUFACTURER, NR. DECENT ART, RAJKOT-GUJARAT (INDIA)	
DATE OF REGISTRATION	25/09/2012
TITLE	HANDLE
PRIORITY NA	

DESIGN NUMBER	244216
CLASS	09-01
1)M/S. HARSH IMPEX CENTRE POINT BUILDING, 21, HEMANTA BASU SARANI, 3RD FLOOR, SUITE NO-321, KOLKATA-700001	
DATE OF REGISTRATION	29/03/2012
TITLE	BOTTLE
PRIORITY NA	

DESIGN NUMBER	247671
CLASS	07-99
1)MA DESIGN INDIA PRIVATE LIMITED, A COMPANY INCORPORATED IN INDIA HAVING ITS PRINCIPAL PLACE OF BUSINESS AT A-41, SECTOR-80, PHASE-II, NOIDA-201305, U.P. INDIA	
DATE OF REGISTRATION	06/09/2012
TITLE	TRAY
PRIORITY NA	

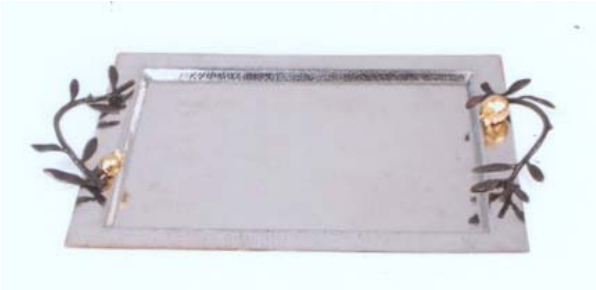

DESIGN NUMBER	245757
CLASS	08-05
1)GUSTAV KLAUKE GMBH OF AUF DEM KNAPP 46, 42855 REMSCHEID, GERMANY	
DATE OF REGISTRATION	06/06/2012
TITLE	HAND POWER TOOL

PRIORITY

PRIORITY NUMBER	DATE	COUNTRY
001307318	22/12/2011	OHIM

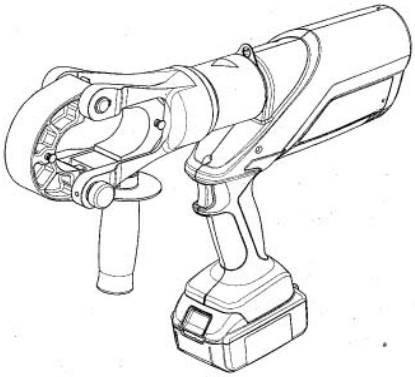

DESIGN NUMBER	245869
CLASS	12-16
1)AUDI AG, OF 85045 INGOLSTADT, GERMANY	
DATE OF REGISTRATION	12/06/2012
TITLE	VEHICLE WHEEL RIM

PRIORITY

PRIORITY NUMBER	DATE	COUNTRY
001962853-0001	15/12/2011	OHIM

DESIGN NUMBER	245317
CLASS	15-09
1)JAYESHBHAI L. SANGANI AN INDIAN NATIONAL SOLE PROPRIETOR OF SHREE HARIKRUPA MANUFACTURES AN INDIAN PROPRIETORSHIP FIRM HAVING ITS PRINCIPAL PLACE OF BUSINESS AT K-1, 242/ 13, Q-ROAD, STREET NO. Q2, AJI G.I.D.C., B/H. MELTECH, RAJKOT, GUJARAT - INDIA	
DATE OF REGISTRATION	15/05/2012
TITLE	TOOL FOR DIE CASTING MACHINERY

PRIORITY NA