REV	DESCRIPTION OF CHANGE	BY	DATE
P7	PROTOTYPE RELEASE.	EPD	8/12/2015

EMBEDDED PRODUCT DESIGN -
CONFIDENTIAL INFORMATION

Embeeded Product Design, LLC
Richardson, TX 75081

Title
PROCESSOR MODULE S7-176QFP

Size	Document Number	Rev
B	<Doc>	P7

Date: Wednesday, August 26, 2015 Sheet 1 of 4

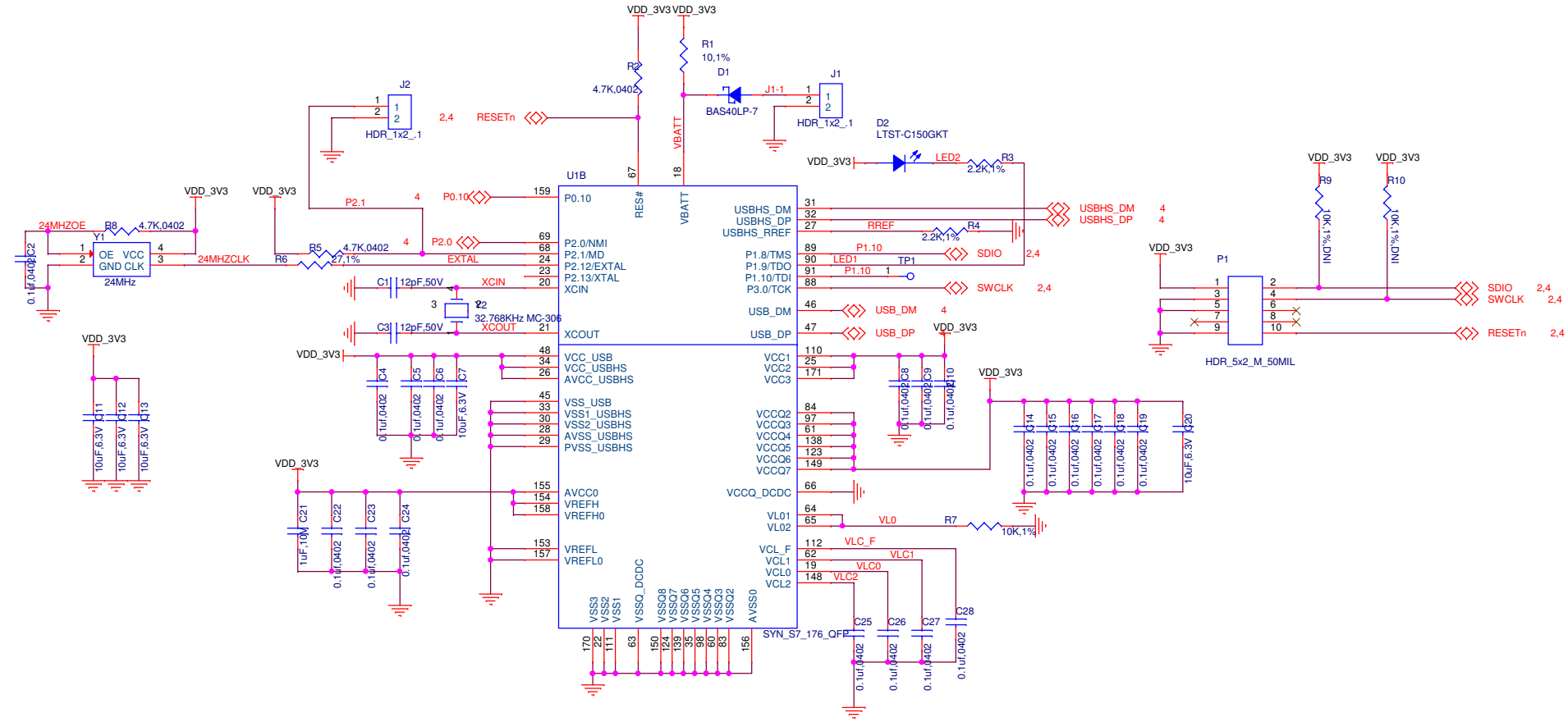

ESD RING

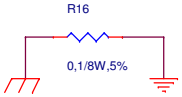

EMBEDDED PRODUCT DESIGN – CONFIDENTIAL INFORMATION

Embedded Product Design, LLC
Richardson, TX 75081

Title	<Title>	
Size B	Document Number <Doc>	Rev P7
Date: Wednesday, August 26, 2015	Sheet 2 of 4	

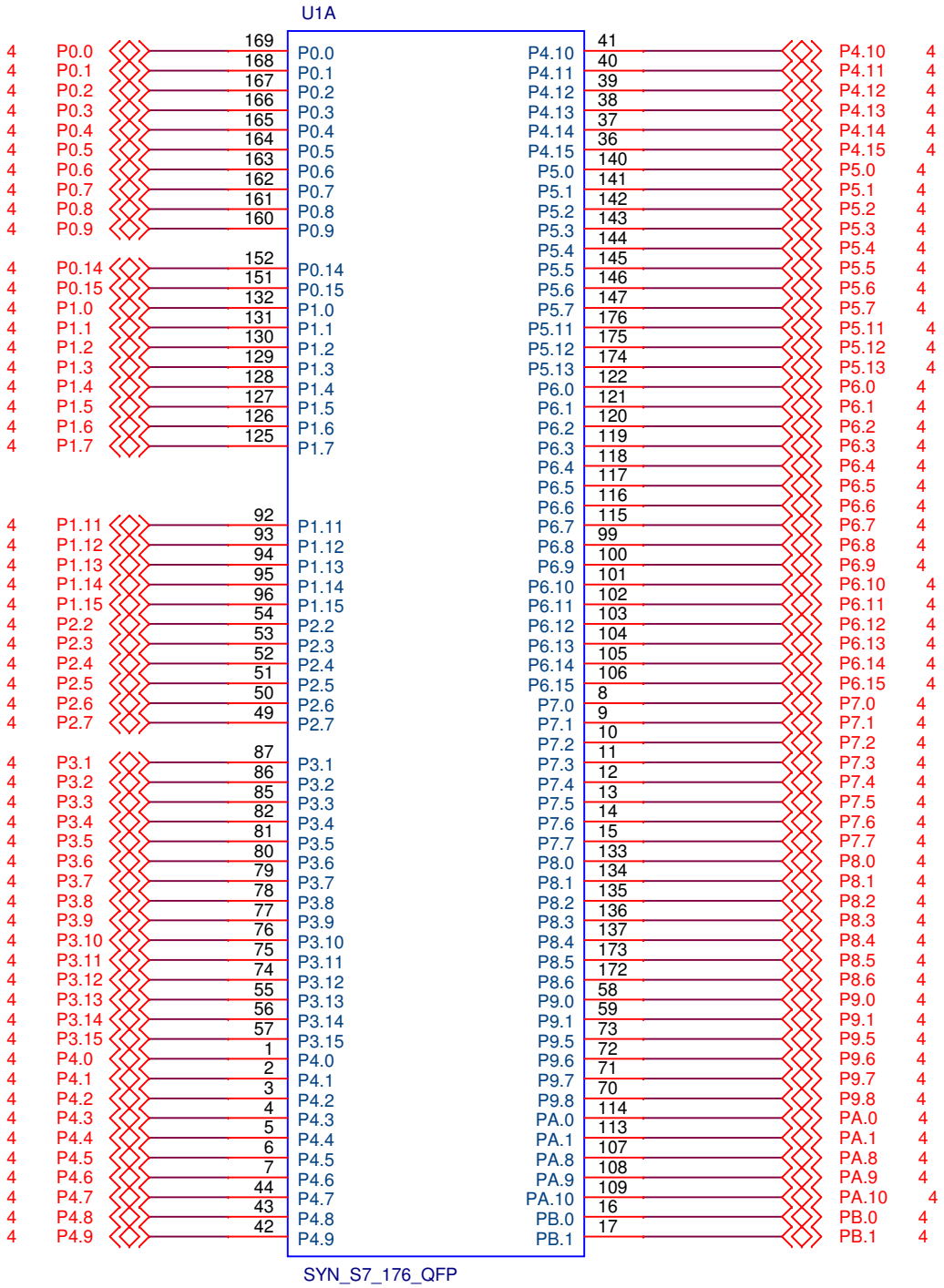

EMBEDDED PRODUCT DESIGN - CONFIDENTIAL INFORMATION

Embedded Product Design, LLC
Richardson, TX 75081

Title	<Title>	
Size A	Document Number <Doc>	Rev P7
Date: Wednesday, August 26, 2015	Sheet 3 of 4	

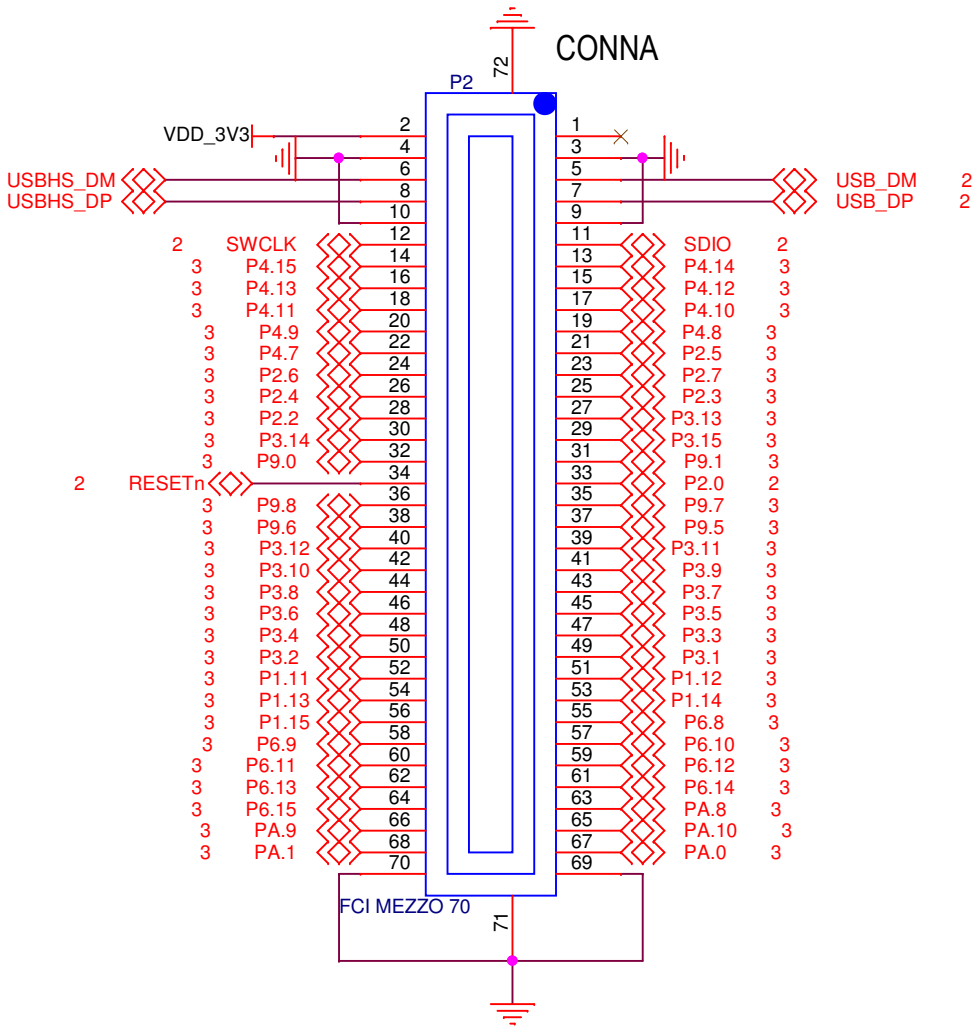

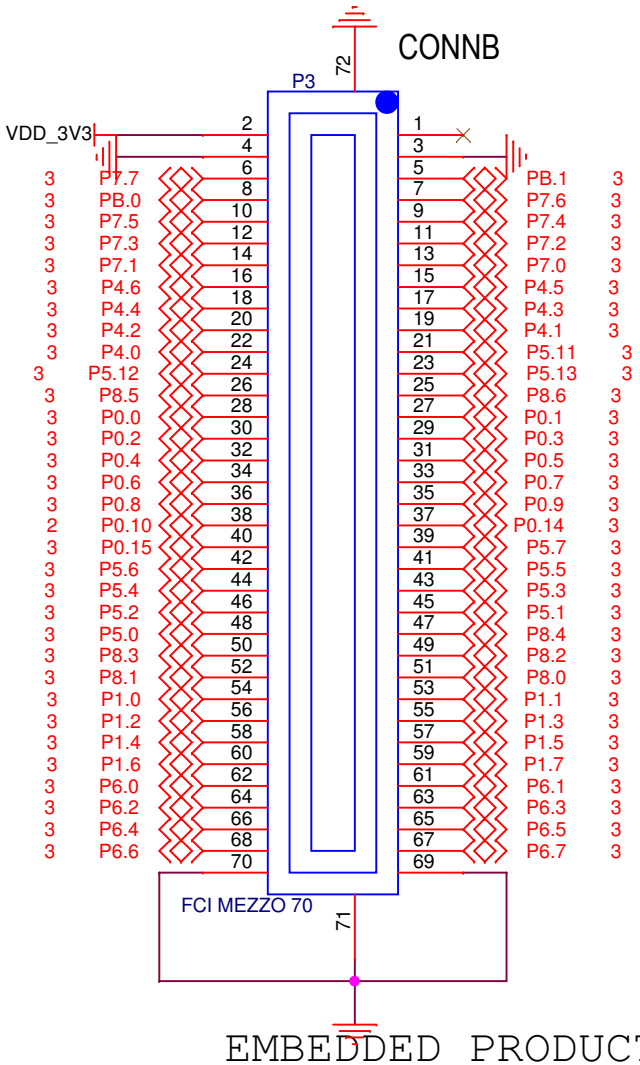

EMBEDDED PRODUCT DESIGN - CONFIDENTIAL INFORMATION

Embedded Product Design, LLC
Richardson, TX 75081

Title	DISCBOARD PM S7-176 EXPANSION CONNECTORS
Size A	Document Number <Doc>
Rev	P7
Date:	Wednesday, August 26, 2015
Sheet	4 of 4