Resonant Frequency of a Stainless Steel Tumbler

Alex Moriarty

March 18, 2026

Abstract

After accidentally dinging my steel coffee tumbler, I observed a clear note resonate. Intrigued by the premise of deriving and verifying the pitch of the note I heard, I got to work on this project as a means to learn about vibrational solid body resonance and FFT analysis. I first perform predictive calculations to derive the theoretical resonance frequency of the shell, and later compare it to experimental analysis that yields an actual measured value for the frequency.

1 Introduction

The inspiration for this project came largely by chance, as one night I was washing dishes when I accidentally tapped the exterior of my coffee tumbler with a large carving knife. The lidless mug, empty and fully dry, resounded loudly at what sounded like pure, constant frequency. I have never claimed to have perfect pitch, but having played music all my life, relative pitch has presented itself as a trainable skill to me. I immediately compared the note I heard to the low E I am using to hearing from my guitar, and determined the note to be somewhere near an F#. I further confirmed this after running to my house's piano and playing an F# key over the resonating mug, hearing minimal interference between the two frequencies.

However, I quickly remembered my lack of remembrance of when our piano was last serviced, and realized that my reference point itself may not be trustworthy. Eager to prove my theory, I decided to perform a full acoustical analysis of my coffee tumbler to see if I could analytically and experimentally prove that what I heard was truly an F#.

The order of operations for this project are as such:

- Construct a simple mechanical model for the tumbler geometry
- Predict the dominant resonance frequency
- Measure the actual frequency using FFT analysis
- Compare theory and experiment

2 Set-Up, Assumptions, & Methods

2.1 Preliminaries

Figure 1 displays the physical measurements I made to the tumbler using a standard metric ruler and a flaccid tape measure. Segment I represents the upper region of the tumbler spanning from the open top to where the steel loses linearity and inflects. The inflection point is where Segment II begins and travels down to the base of the mug. The object is radially symmetric about its

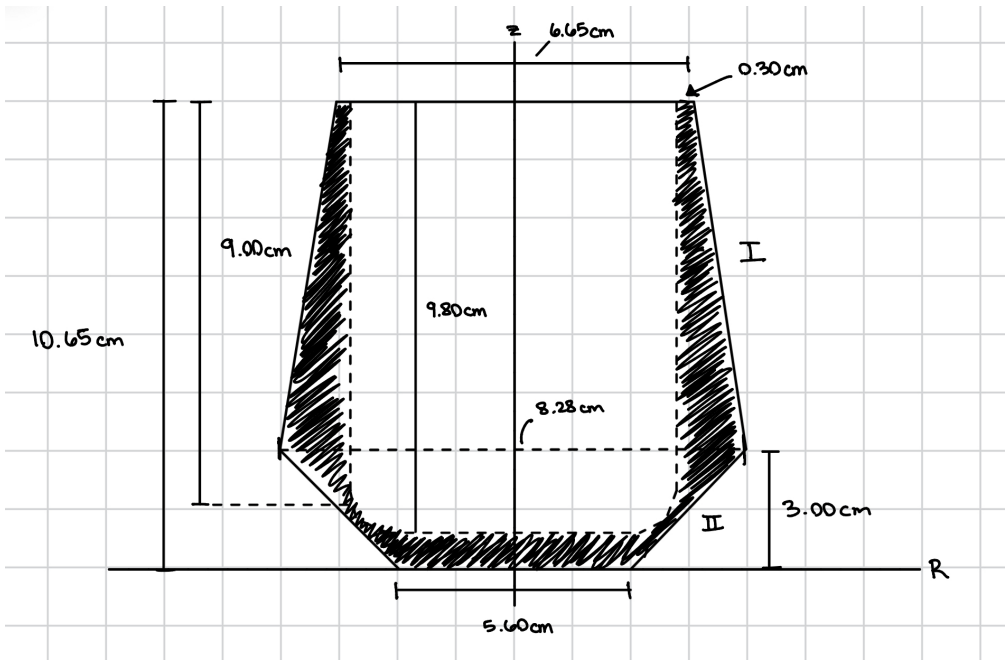

Figure 1: A visual diagram of the tumbler I am analyzing. The depiction showcases the differing diameters and height features of the tumbler when examining both the interior and exterior. Vertices of the figure are resultant of linear approximations, the actual solid body boasts smooth curves to bridge segments.

vertical axis, akin to any standard cup or mug without a handle. This symmetry is what drove me to project the tumbler onto a vertical z axis and a horizontal radial axis. The shaded in portion of the diagram represents the insulated space between the shell layers. Whether the insulation layer is composed of air versus vacuum space is ambiguous. I took into account the very thin lip at the top of the tumbler and defined it as the 0.03 cm seen in the image. Note that the thickness of the steel shell is not taken into account in this image and is also ambiguous. I rely on experimental methods to derive a reasonable value for the thickness later.

Some important quantities that will reappear in later analyses are the diameters, or more productively, the radii. For simplicity, I have assigned variable identities to the most significant and recurrent values:

$$H = 10.65 \text{ cm} \tag{1}$$

$$R_0 = \frac{5.60 \text{ cm}}{2} = 2.80 \text{ cm} \tag{2}$$

$$R_1 = \frac{8.28 \text{ cm}}{2} = 4.14 \text{ cm} \tag{3}$$

$$R_2 = \frac{6.65 \text{ cm}}{2} = 3.33 \text{ cm} \tag{4}$$

$$h = 3.00 \text{ cm} \tag{5}$$

Now that we have established baseline assumptions, we can begin our physical analysis of the tumbler's resonance.

2.2 Eventual Goal

When the tumbler was tapped, the audible ringing tone arose from a structural vibration mode of the metal shell. To estimate the frequency of this mode, I am approximating the tumbler as a thin elastic shell with a variable radius dependent upon height. The theoretical prediction for the resonance depends primarily on the shell thickness and the curvature of the structure. Therefore, several geometric parameters must be determined before a frequency estimate can be made. The following sections will pursue calculations of an effective shell thickness representing the combined inner and outer walls of the insulated mug, a radius profile $R(z)$ describing the shape of the side wall, and an effective radius R_{eff} that reduces the variable-radius geometry to an equivalent constant-radius model.

3 Geometry and Effective Thickness

The tumbler is double-walled with an insulation gap between an inner and outer stainless shell. A full two-shell coupled vibration model is beyond the scope of what I am trying to solve for in this project, so the structure is approximated as a single equivalent thin shell with an effective thickness t_{eff} chosen to preserve the total volume of metal.

3.1 Effective shell thickness from mass and surface area

The effective thickness is defined as

$$t_{\text{eff}} = \frac{m}{\rho A_{\text{total}}}, \tag{6}$$

where m is the measured mass of the tumbler, ρ is the density of stainless steel, and A_{total} is the combined surface area of the inner and outer metal surfaces.

3.1.1 Outer surface area

The outer wall geometry was approximated using two linear segments corresponding to the major slanted wall and the lower transition to the base (see Figure 1). I chose this approximation because the curvature that bridges these two segments is only really noticeable at the point of inflection, and the majority of each segment truly is linear. Under this assumption, each segment can be modeled as the lateral surface of a conical frustum.

The lateral area of a frustum with radii R_1 and R_2 and vertical height h is

$$A_f = \pi(R_1 + R_2)\sqrt{(R_1 - R_2)^2 + h^2}. \tag{7}$$

Using measured dimensions from the tumbler profile, the outer surface area is approximated as the sum of the upper frustum wall area, the lower frustum wall area, and the bottom circular area;

$$A_{\text{out}} = A_{\text{upper}} + A_{\text{lower}} + A_{\text{bottom}}. \tag{8}$$

Using the measured geometry, Equation (2), and $A_{\text{bottom}} = \pi R_0^2$, the sum yields

$$A_{\text{out}} \approx 180.42\ \text{cm}^2 + 71.64\ \text{cm}^2 + 24.63\ \text{cm}^2 \approx 276.69\ \text{cm}^2. \tag{9}$$

3.1.2 Inner surface area

I took an interesting approach to calculating the inner surface area, largely because I struggled to physically measure a lot of the features inside the mug. There is a metallic hump at the center of the bottom interior and the curvature is more intense relative to the exterior. To combat this, I recalled that I know the volume of the interior to hold 295 milliliters of fluid. Then, I opted to re-imagine the geometry of the interior as a cylinder with an equivalent radius that holds an equivalent volume of water, that way I could calculate the surface area of this new shape after solving for the height.

This approach was nice because the conversion factor for milliliters to cubic centimeters is 1, so I just had to set the 295 mL equal to the volume of a cylinder with $r = 3.33$ and solve for height.

$$h = \frac{295}{\pi R_2^2} \approx 8.68 \text{ cm} \tag{10}$$

The interior surface area could now be calculated by summing the wrapped surface area of our cylinder in addition to one of the bases, since the mug is open at the top.

$$A_{\text{in}} = 2\pi R_2 h + \pi R_2^2 \approx 174.52 \text{ cm}^2 \tag{11}$$

$$A_{\text{in}} \approx 174.52 \text{ cm}^2. \tag{12}$$

3.1.3 Total metal surface area

Adding inner and outer contributions yields

$$A_{\text{total}} \approx A_{\text{out}} + A_{\text{in}} \approx 451.21 \text{ cm}^2. \tag{13}$$

3.1.4 Effective thickness

Using a kitchen scale, I measured the tumbler mass to be

$$m = 184 \text{ g} = 0.184 \text{ kg}. \tag{14}$$

The unit-converted density of stainless steel is

$$\rho \approx 7800 \text{ kg/m}^3 = 0.0078 \text{ kg/cm}^3 \tag{15}$$

So the effective shell thickness becomes

$$t_{\text{eff}} = \frac{0.184}{(0.0078)(451.21)} \approx 0.056 \text{ cm}. \tag{16}$$

This value represents the thickness of an equivalent single shell containing the same total volume of metal as the actual double-walled structure.

4 Radius Profile

Deriving an effective thickness allows us to adjust the radii I had measured before from only taking the exterior parameters into account, to embodying the actual thickness of the shell. Because the effective thickness takes both walls into account, to work radially again we have to divide t_{eff} by 2 to rescale our initial radii.

If we were originally working with a perfect cylinder, this would be enough to yield an effective radius, but because the radius for this mug is variable by height, we must take all radial contributions into account in order to reduce our structure into a constant-radius model. This is where my linear approximations for Segments I & II are useful, as instead of trying to define a function for the curvature of the tumbler, we can integrate a piecewise-linear model.

4.1 Mid-surface radii at key heights

This is a minor intermediate step to rescale our radii. As stated, we are simply subtracting $t_{\text{eff}}/2$ from R_0, R_1, and R_2 to yield:

$$R_\alpha = 2.77 \text{ cm}, \qquad R_\beta = 4.11 \text{ cm}, \qquad R_\gamma = 3.29 \text{ cm}. \tag{17}$$

These correspond respectively to $z = 0$ (bottom), $z = h$ (maximum radius), and $z = H$.

4.2 Piecewise-linear model

Finding the linear equations here was really just slope-intercept form using known coordinate pairs. See Figure 3 for graphical reference.

For Segment II, $0 \leq z \leq h$,

$$R_{II}(z) = a_{II} z + b_{II}, \tag{18}$$

with boundary conditions $R_{II}(0) = R_\alpha$ and $R_{II}(z_1) = R_\beta$, giving

$$a_{II} = \frac{R_\beta - R_\alpha}{z_1}, \qquad b_{II} = R_\alpha. \tag{19}$$

For the upper segment (Segment I), $h \leq z \leq H$,

$$R_I(z) = a_I z + b_I, \tag{20}$$

with $R_I(z_1) = R_\beta$ and $R_I(H) = R_\gamma$, giving

$$a_I = \frac{R_\gamma - R_\beta}{H - h}, \qquad b_I = R_\beta - a_I h. \tag{21}$$

After subbing in values, the full radius profile is therefore

$$R(z) = \begin{cases} 0.446z + 2.77, & 0 \leq z \leq h, \\ -0.107z + 4.43, & h \leq z \leq H. \end{cases} \tag{22}$$

5 Effective Radius

As has been iterated, the simplified vibration model we are working towards treats the tumbler as a thin ring with a single constant radius. To reconcile these two descriptions, an effective radius R_{eff} is introduced.

5.1 Motivation

For the $n = 2$ vibration mode, each horizontal slice of the tumbler behaves approximately like a thin ring with local radius $R(z)$. The stiffness of such a ring against ovalization depends strongly on its curvature. In particular, thin-ring vibration theory shows that the natural frequency scales approximately as

$$f \propto \frac{1}{R^2}, \tag{23}$$

or equivalently

$$\omega^2 \propto \frac{1}{R^4}. \tag{24}$$

This strong dependence means that different vertical slices of the tumbler contribute unequally to the overall stiffness of the structure, as regions with smaller radii resist deformation more strongly than regions with larger radii. To combat this effect, the variable radius is replaced by a single equivalent radius R_{eff} whose stiffness matches the average behavior of the real structure.

5.2 What do we integrate?

To reduce the tumbler, an approximate energy method is used. The starting point is the Rayleigh estimate for the natural frequency of a vibrating elastic structure:

$$\omega^2 \approx \frac{U}{T}, \tag{25}$$

where U is the maximum strain energy stored during deformation and T is the maximum kinetic energy.

A horizontal slice of the tumbler at height z is treated as a thin ring of local radius $R(z)$. For such a ring, the characteristic frequency of the ovalization mode scales as

$$\omega^2 \propto \frac{E}{\rho} \frac{t_{\text{eff}}^2}{R(z)^4}, \tag{26}$$

where E is Young's modulus, ρ is density, and t_{eff} is the effective shell thickness. Notice that the local stiffness contribution varies proportionally to $1/R(z)^4$.

For a thin slice of height dz, the strain-energy contribution may therefore be further approximated as

$$dU \propto \frac{1}{R(z)^4}\, dz, \tag{27}$$

And likewise, if the mass per unit height is approximately uniform,

$$dT \propto dz. \tag{28}$$

Integrating over the full modeled height H gives

$$U \propto \int_0^H \frac{dz}{R(z)^4}, \tag{29}$$

and

$$T \propto \int_0^H dz = H. \tag{30}$$

Substituting these into the Rayleigh estimate yields

$$\omega^2 \propto \frac{\int_0^H \frac{dz}{R(z)^4}}{H}. \tag{31}$$

Comparing this with the constant-radius thin-ring scaling

$$\omega^2 \propto \frac{1}{R^4}. \tag{32}$$

This suggests that we can define an effective radius R_{eff} such that the equivalent constant-radius ring has the same height-averaged stiffness as the actual variable-radius wall. Making this connection yields

$$\frac{1}{R_{\text{eff}}^4} = \frac{1}{H}\int_0^H \frac{dz}{R(z)^4}. \tag{33}$$

Thus,

$$R_{\text{eff}} = \left(\frac{H}{\int_0^H \frac{dz}{R(z)^4}}\right)^{1/4}. \tag{34}$$

Now we can begin our actual integration!

5.3 Piecewise evaluation

Since $R(z)$ was modeled as two continuous segments,

$$R(z) = \begin{cases} R_{II}(z), & 0 \le z \le h \\ R_I(z), & h \le z \le H \end{cases} \tag{35}$$

the integral separates into two contributions:

$$\frac{1}{R_{\text{eff}}^4} = \frac{1}{H}\left(\int_0^h \frac{dz}{R_{II}(z)^4} + \int_h^H \frac{dz}{R_I(z)^4}\right). \tag{36}$$

Both of our functions are of the general form:

$$R(z) = az + b, \tag{37}$$

Using a simple u-substitution produces the general antiderivative for our fourth order integrand:

$$\int \frac{dz}{(az+b)^4} = -\frac{1}{3a}(az+b)^{-3}. \tag{38}$$

After evaluating at the assigned boundaries, the integrals evaluate as such:

$$\int_0^h \frac{dz}{R_{II}(z)^4} = \int_0^3 \frac{dz}{(0.446z + 2.77)^4} \approx 0.024 \tag{39}$$

$$\int_h^H \frac{dz}{R_I(z)^4} = \int_3^{10.65} \frac{dz}{(-0.107z + 4.43)^4} \approx 0.043 \tag{40}$$

Plugging these results into our equation for R_{eff}:

$$R_{\text{eff}} \approx 3.55 \text{ cm}. \tag{41}$$

This value represents the radius of a ring with constant curvature, whose stiffness approximates the averaged stiffness of the actual tumbler wall.

6 Frequency Prediction

Now that we have the effective shell thickness t_{eff} and effective radius R_{eff}, the tumbler wall can be approximated as a thin ring vibrating in a circumferential mode. The goal of this section is to estimate the resonance frequency of this ring using a classical thin-ring vibration model.

6.1 The Model

For the in-plane vibration of a circular ring, the angular frequency of the circumferential mode n is given by

$$\omega_n = \frac{n(n^2-1)}{\sqrt{n^2+1}} \sqrt{\frac{EI}{\rho A R^4}}, \tag{42}$$

where E is Young's modulus, ρ is the material density, I is the second (area) moment of inertia, A is the cross-sectional area, and R is the ring's radius.

6.2 Cross-sectional approximation

The tumbler wall is modeled as a thin rectangular section with height h and radial thickness t_{eff}. Based on how we are describing the oscillations physically, the relevant bending occurs about the axis perpendicular to the ring plane, so

$$A = h\, t_{\text{eff}}, \tag{43}$$

$$I = \frac{h\, t_{\text{eff}}^3}{12}. \tag{44}$$

The ratio therefore becomes

$$\frac{I}{A} = \frac{t_{\text{eff}}^2}{12}. \tag{45}$$

We can plug this into the model such that

$$\omega_n = \frac{n(n^2-1)}{\sqrt{12(n^2+1)}} \sqrt{\frac{E}{\rho}} \frac{t_{\text{eff}}}{R_{\text{eff}}^2}. \tag{46}$$

Finally, using $f = \omega/(2\pi)$ gives

$$f_n = \frac{n(n^2-1)}{2\pi\sqrt{12(n^2+1)}} \sqrt{\frac{E}{\rho}} \frac{t_{\text{eff}}}{R_{\text{eff}}^2}. \tag{47}$$

This expression displays how the resonance frequency scales based on material properties and geometry.

6.3 Plugging In

The integer n represents the circumferential mode number and determines the number of deformation waves around the rim. The lowest mode corresponds to $n = 2$, while higher values represent increasingly complex shapes. I will present the first two modes for analysis.

Using the measured geometric parameters

$$t_{\text{eff}} = 5.6 \times 10^{-4}\,\text{m}, \tag{48}$$

$$R_{\text{eff}} = 3.55 \times 10^{-2}\,\text{m}, \tag{49}$$

and material properties for stainless steel

$$E \approx 2.0 \times 10^{11}\,\text{Pa}, \qquad \rho \approx 7800\,\text{kg/m}^3, \tag{50}$$

the predicted frequencies for the first two candidate circumferential modes are

$$f_{n=2} \approx 277\ \text{Hz} \tag{51}$$

$$f_{n=3} \approx 785\ \text{Hz}. \tag{52}$$

7 Experimental Measurement

This portion of my analysis is where my original hypothesis is truly tested. I have taken an audio recording of taps made to the exterior of the empty, lidless tumbler body. The taps were applied using a large steel kitchen knife to maximize the intensity of the output resonance without dulling the noise upon impact. The audio itself was recorded using my smartphone and was uploaded in .wav file format into a Jupyter Notebook. The file was then analyzed using Python libraries and the following signal processing pipeline:

1. Normalized + mono conversion
2. High-pass filtration
3. Envelope computation
4. Peak detection
5. Extraction of ringdown segments
6. Application of a Hann window
7. Fast Fourier Transform (FFT)
8. Dominant spectral peak
9. Parabolic interpolation

Each subsection below will provide a brief description of the header technique used and why, but a more rigorous application of the techniques is reflected in the actual Jupyter Notebook for this portion of analysis. For more details, including numerics, I strongly recommend consultation of the Python script I developed.

7.1 Norm. + Mono + High-Pass Filtration

Most smartphone audio assume stereo form so my first steps for analysis involve converting the .wav file to mono and normalizing to within a consistent amplitude band.

Raw microphone recordings often contain low-frequency background noise from handling, environmental vibrations, or microphone drift. Because the structural ringing of the tumbler occurs at much higher frequencies, our audio was passed through a high-pass filter to suppress frequencies below approximately 100 Hz. This preprocessing step will improve the stability of peak-detection algorithms later on in the analysis.

The resultant plot is below:

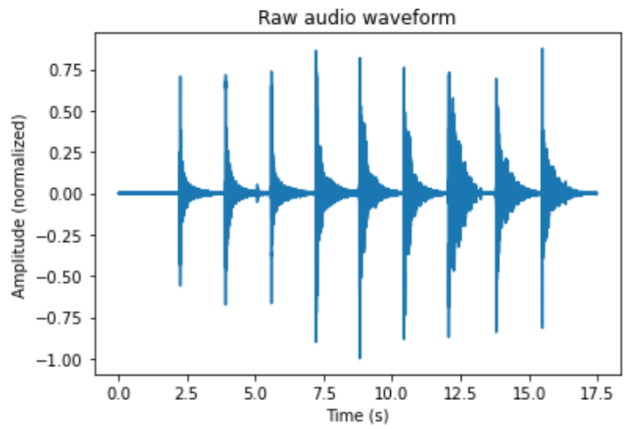

Figure 2: Emergent plot of .wav file after switching to mono and normalizing amplitudes. Each tap made to the tumbler represented by peak.

7.2 Envelope Detection & Peak Detection

The absolute value of the waveform was computed to form a signal envelope. This envelope was then smoothed using a short moving-average window to remove rapid oscillations. Peaks in the resulting envelope correspond to the impact events produced by individual taps.

I applied a peak-finding algorithm to this smoothed envelope in order to identify the time associated with each tap. Only peaks above a specified threshold were kept.

7.3 Ringdown Segments

Each tap on the tumbler produces a waveform with two qualitatively different parts. The first is the impact transient: a short, sharp broadband pulse generated at the moment of contact. This portion of the signal contains energy across a wide range of frequencies and is dominated by the mechanics of the strike itself rather than the natural resonance of the tumbler. The second part is the ringdown: a decaying oscillatory response that persists after the impact and is governed by the structural vibration modes of the tumbler wall.

The purpose of ringdown segmentation is to isolate this second portion of the signal. Rather than analyzing the full waveform from the instant of impact onward, a shorter time interval is selected that begins slightly after the tap and contains the exponentially decaying resonant response. In this project, each segment was taken to begin approximately 20 ms after the detected tap and to extend for roughly 0.6 s.

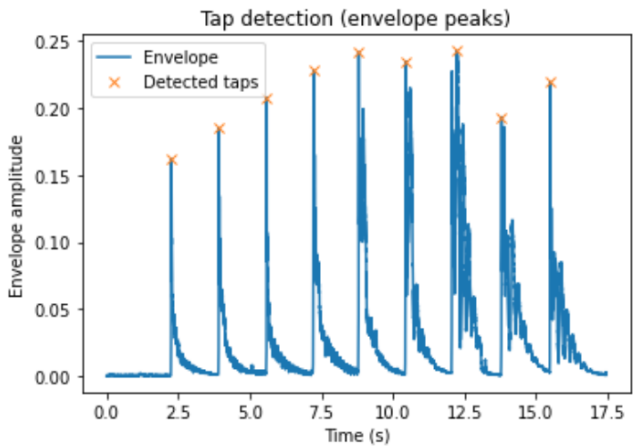

Figure 3: Peaks identified after envelope detection applied. Nine, to be exact.

This segmentation step is important because the impact transient and the ringdown carry different information. By restricting the FFT analysis to the ringdown interval, the extracted spectral peaks more directly represent the natural frequencies of the structure rather than the details of the excitation.

Each ringdown segment was also mean-centered prior to Fourier analysis in order to remove any residual DC offset from the extracted waveform.

7.4 Hann Window and FFT

To determine the dominant frequencies present in the ringdown signal, each segment was transformed into the frequency domain using the Fast Fourier Transform (FFT).

Before applying the FFT, the signal was multiplied by a Hann window. Windowing reduces leakage, which can occur when finite-length time signals are transformed into the frequency domain. By smoothly tapering the signal toward zero at its endpoints, the Hann window improves the clarity of peaks in the resulting spectrum.

The FFT was then computed using the real-valued Fourier transform, producing a magnitude spectrum representing the amplitude of each frequency component present in the ringdown signal.

7.5 Spectral peak identification

After computing the spectrum for each tap, the dominant resonance was identified by locating the largest peak within a selected frequency range of interest. In this project, the search was restricted to a band that excluded low-frequency background and high-frequency noise, allowing the analysis to focus on the range where the structural resonance was expected to appear.

Restricting the search band improves robustness by preventing the algorithm from selecting unrelated spectral features outside the physically relevant frequency range.

7.6 Parabolic interpolation

Because the FFT is evaluated on a discrete set of frequency bins, the true resonance frequency does not generally lie exactly at the center of one bin. Instead, the largest spectral bin provides only a nearest discrete estimate of the peak location.

To improve the frequency estimate, a parabolic interpolation was applied around the dominant peak. This procedure uses the peak bin and its two neighboring bins to fit a local quadratic curve, whose maximum provides a refined estimate of the actual peak frequency. In effect, this produces sub-bin resolution and yields a more accurate estimate of the resonance than the raw FFT grid alone.

This step is especially useful when the true resonance lies between FFT bins or when the segment length limits the native frequency spacing of the transform.

7.7 Averaging across taps

The above procedure was repeated for each detected tap in the recording, yielding multiple estimates of the dominant peak. Initially, these peak frequencies were treated as a single set when computing the mean and standard deviation. However, inspection of the spectra revealed that certain detected peaks did not all belong to the same spectral category. Two distinct frequency clusters were observed: one near the fundamental ringing frequency and another near approximately twice that value, corresponding to a harmonic.

Because these clusters represent different physical phenomena, I did not average them together. Instead, I separated the frequencies into spectral families and computed the summary statistics independently from each other; one set for the fundamental frequency and one for the associated harmonic. This step will be obvious once the actual emergent values are revealed.

7.8 Observed spectral structure

Analysis of the recorded taps revealed a stable dominant peak near

$$f_{\text{measured}} \approx 733.7 \text{ Hz}, \tag{53}$$

along with a second consistent peak near

$$f_{\text{harmonic}} \approx 1464.3 \text{ Hz}. \tag{54}$$

The second peak is approximately twice the first and is therefore interpreted as the second harmonic of the dominant resonant mode.

8 Results

Across nine recorded taps, two stable peaks were observed in the FFT spectra:

$$f_{\text{measured}} \approx 733.7 \text{ Hz} \tag{55}$$

$$f_{\text{harmonic}} \approx 1464.3 \text{ Hz} \tag{56}$$

Mapping these frequencies to the closest nearby notes corresponds to approximately F#5 and the second to its second harmonic, F#6! The specific errors in cents can be seen in the Jupyter notebook for this analysis.

9 Discussion

The theoretical model predicted frequencies of approximately

$$f_{n=2} \approx 277 \text{ Hz} \tag{57}$$
$$f_{n=3} \approx 785 \text{ Hz.} \tag{58}$$

while the measured fundamental resonance was

$$f_{\text{measured}} \approx 734 \text{ Hz}$$

Despite coming this far in the analysis, there are a couple of leaps that must be made in order to try and achieve closure for our theoretical model. One is to recognize that perhaps the tumbler does not resonate in its $n = 2$ mode, but rather its $n = 3$, as evidenced by the just $\approx 7\%$ error between our measured fundamental resonance and the $n = 3$ mode. This may just be coincidence and our $n = 2$ model may just be overdependent upon generalizations and approximations, or there may be something underlying in the complex geometry of the tumbler that forces it to vibrate in a higher oscillation mode. Perhaps the insulation layer is somehow responsible? This is a task for another project, however. There are a couple other factors worth considering in the search for addressing error in the theoretical model:

- Simplification of the geometry into two linear radius segments
- Uncertainty in the effective shell thickness
- Additional stiffness introduced by the rolled rim and base
- Coupling between the inner and outer walls of the tumbler

If we choose to persist that the tumbler oscillates in the $n = 2$ mode, then our model was largely incorrect and must be investigated and refined at a deeper level. Though, if we entertain that it could oscillate at its $n = 3$ mode, we can argue the model to be a sound representation of the tumbler's acoustical properties, boasting a tiny error of just $\approx 7\%$ from the experimentally measured value of 734 Hz.

10 Conclusion

I used a simplified thin-shell model combined with FFT-based audio analysis to estimate the resonant frequency of a stainless steel tumbler with an initial guess being around an F#. The measured resonance was approximately 734 Hz, corresponding closely to the musical note F#5, so I was right! Theoretical predictions based on an effective radius approximation produced a frequency within roughly 7% of the measured value.