POST-LAB TASKS

Task 1:

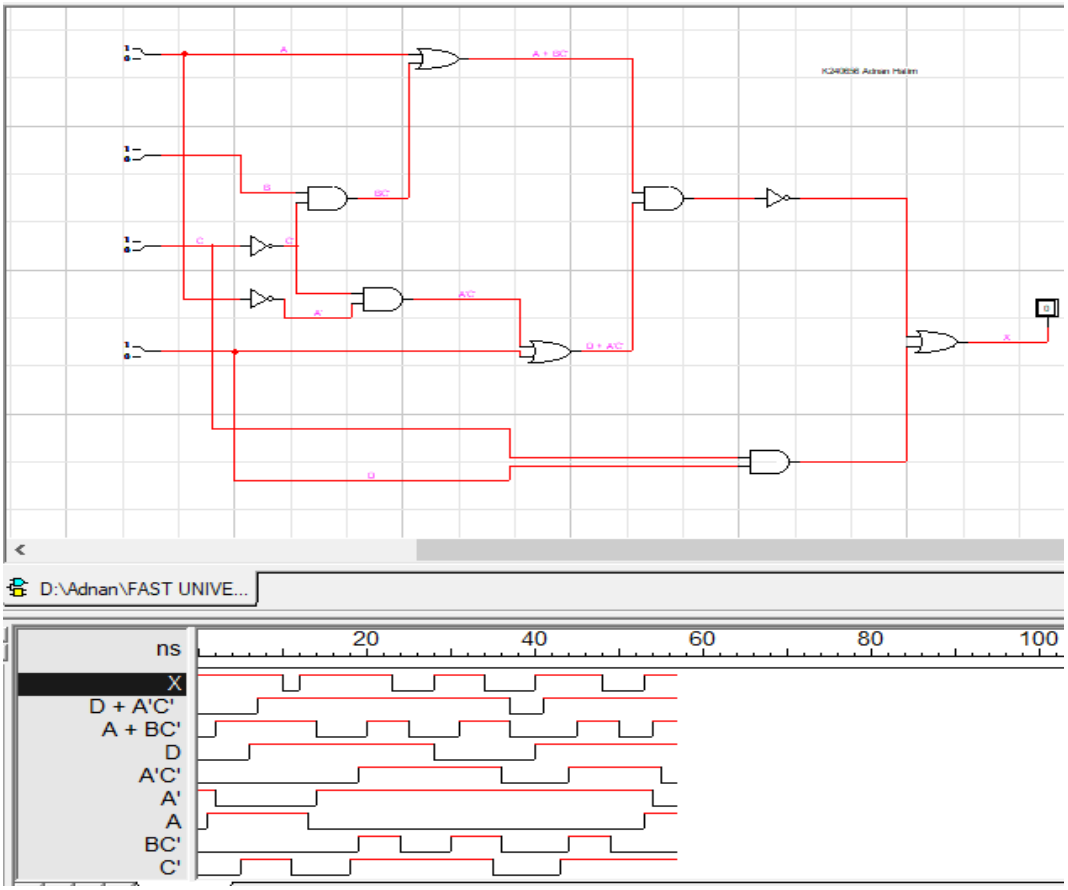

Truth Table:

A	B	C	D	X
0	0	0	0	1
0	0	0	1	1
0	0	1	0	1
0	0	1	1	1
0	1	0	0	0
0	1	0	1	0
0	1	1	0	1
0	1	1	1	1
1	0	0	0	1
1	0	0	1	0
1	0	1	0	1
1	0	1	1	1
1	1	0	0	1
1	1	0	1	0
1	1	1	0	1
1	1	1	1	1

POST-LAB TASKS

Task 2 part 1:

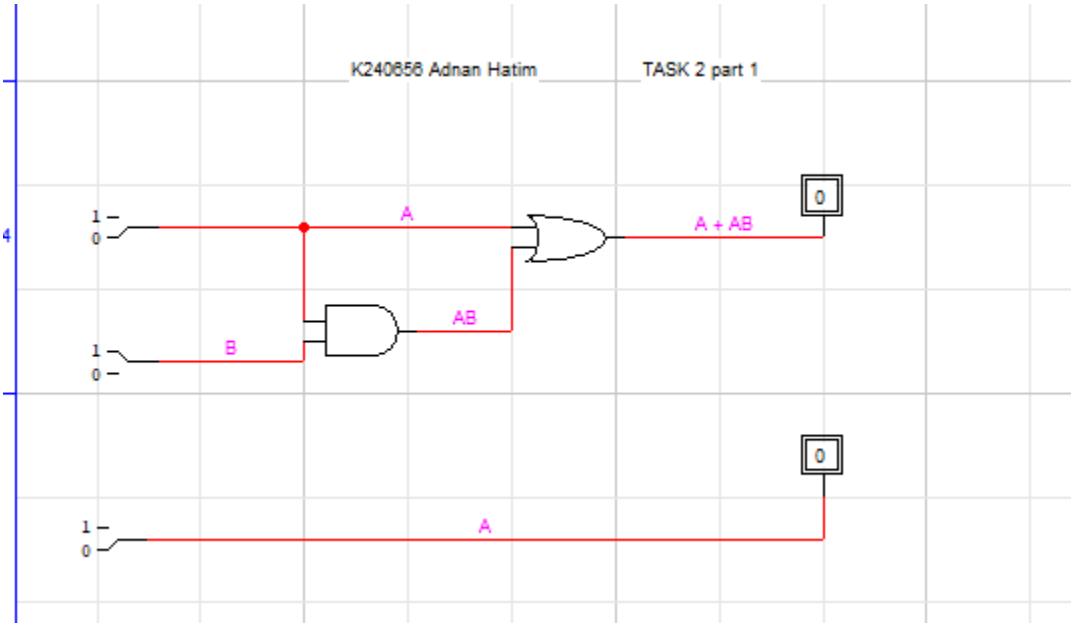

Task 2 Equation Part 1:

DLD LAB

Task 2:-

1) $A + AB = A$ (1+B) => OR gate

$A(1+B) = A$

$A(1) = A$ A(1) => AND Gate

$A = A$

POST-LAB TASKS

Task 2 part 2:

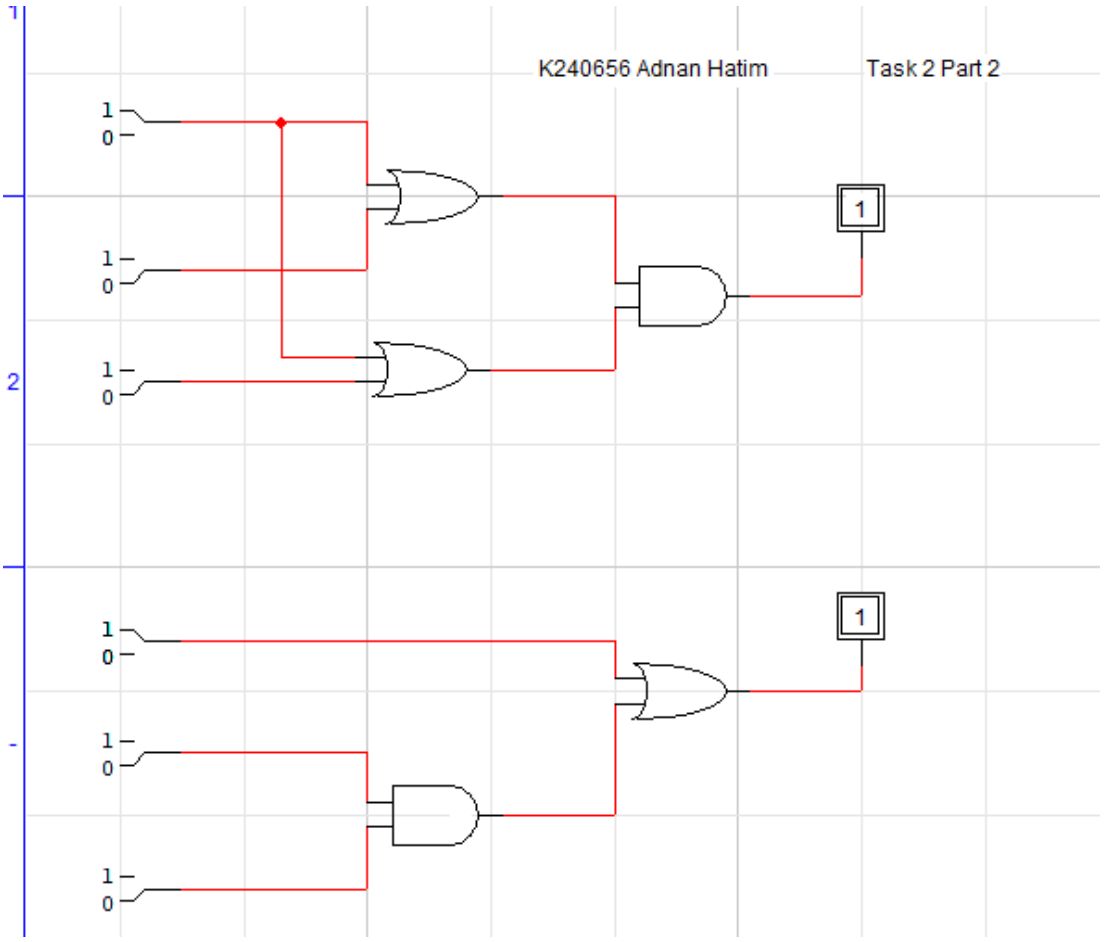

Task 2 Equation Part 2:

2) $(A+B)(A+C) = A+BC$

$A \cdot A + A \cdot C + B \cdot A + B \cdot C = A + BC$

~~A(A+~~

$A + A \cdot C + B \cdot A + B \cdot C = A + BC$

$A(\underbrace{1 + C + B}_{\text{or gate}}) + BC = A + BC$

$A(1) + BC = A + BC$

$A + BC = A + BC$.

POST-LAB TASKS

Task 3:

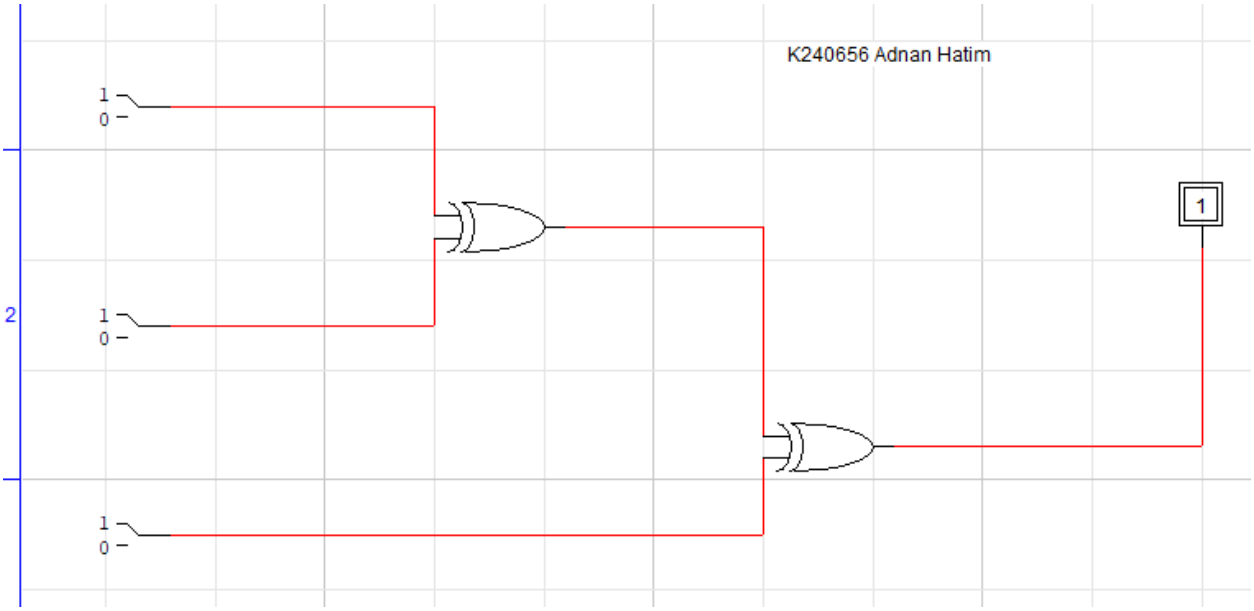

Task 3 Equation:

Task 3:-

$$X = (A'B + AB')'C + (A'B + AB')C'$$

$\because A'B + AB' = A \oplus B$

$$X = (A \oplus B)'C + (A \oplus B)C'$$

$$X = (A \oplus B) \oplus C$$