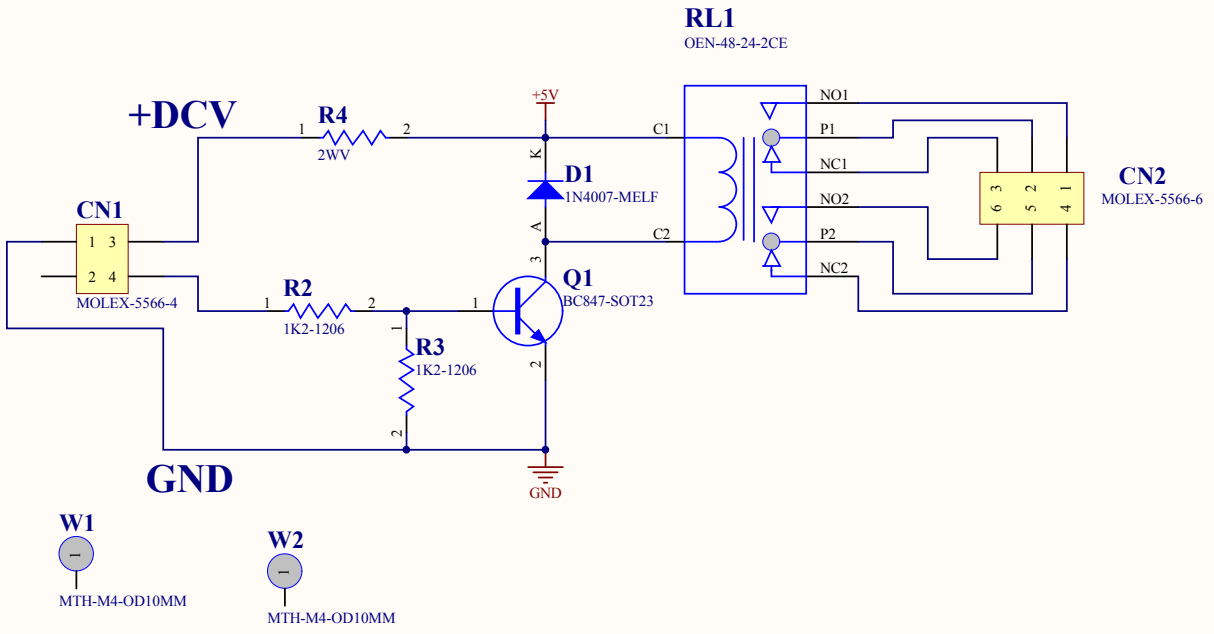

INDEX	MOD. NO.	DESCRIPTION	DATE	SIGN	INDEX	MOD. NO.	DESCRIPTION	DATE	SIGN

	DATE	SIGN
DRWN BY	C I S	
CHKD BY		
APRD BY	S H D	

PROJECT:-

MODEL:-

FILE NAME:-
PA79-573

DSGN 4031/I4/R0

SUPERSEDES NO. FOR CKT:- - - -

SUPERSEDES NO. FOR PCB:- - - -

ADOR WELDING LIMITED
PUNE - 411019

CIRCUIT DIAG. FOR RELAY PCB

Cannot open file D:\Documents and Settings\cs02.ADOR0\My Documents\My Pictures\ador logo.wmf

CK79/900

PA79/573