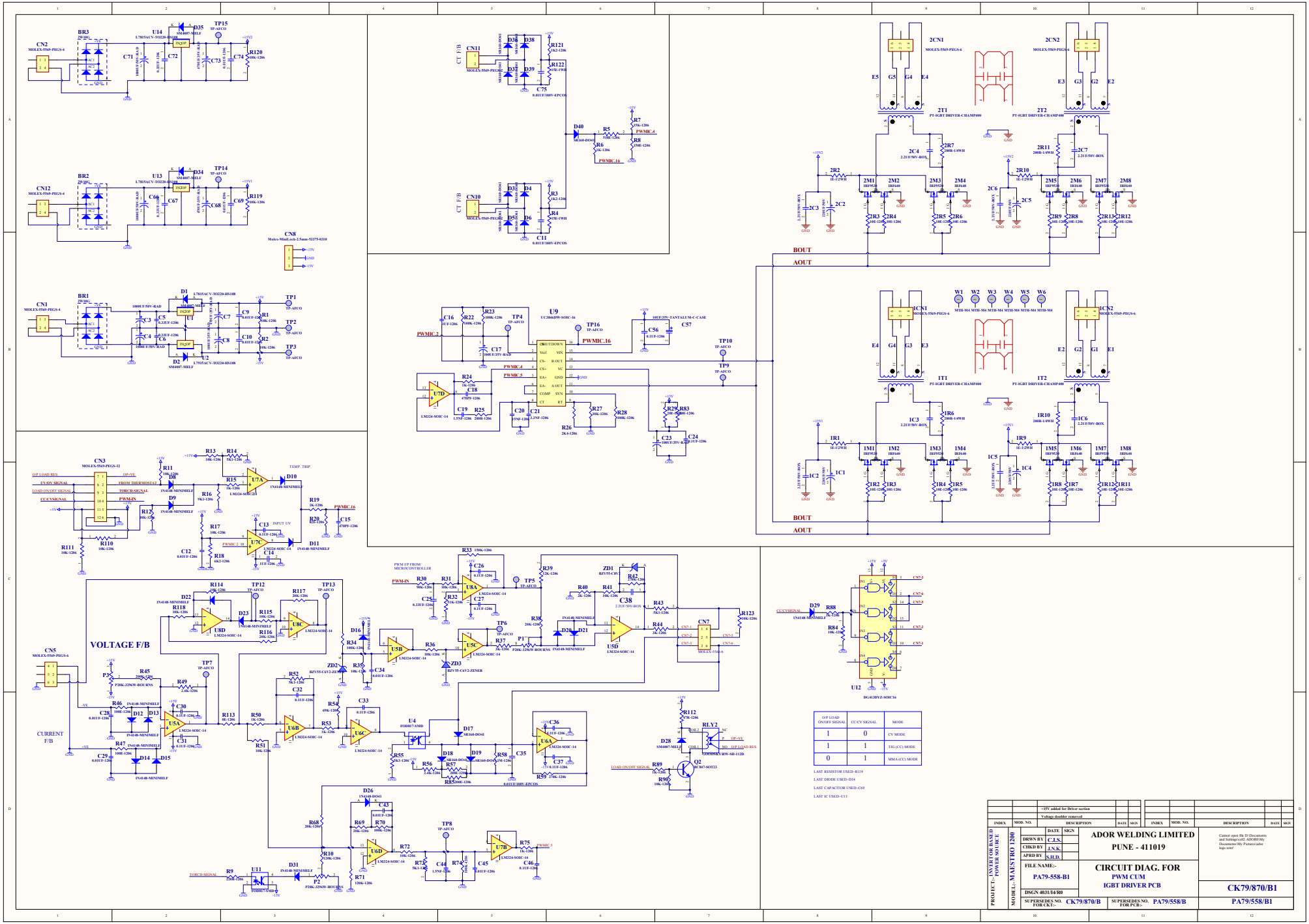

O/P LOAD ON/OFF SIGNAL	CC/CV SIGNAL	MODE
1	0	CV MODE
1	1	TIG (CC) MODE
0	1	MMA (CC) MODE

LAST RESISTOR USED:-R119

LAST DIODE USED:-D14

LAST CAPACITOR USED:-C69

LAST IC USED:-U13

INDEX	MOD. NO.	DESCRIPTION	DATE	SIGN
		+15V added for Driver section		
		Voltage doubler removed		

INDEX	MOD. NO.	DESCRIPTION	DATE	SIGN

PROJECT:- INVERTOR BASED POWER SOURCE

MODEL:- MAESTRO 1200

	DATE	SIGN
DRWN BY	C.I.S.	
CHKD BY	J.N.K.	
APRD BY	S.H.D.	

FILE NAME:- PA79-558-B1

DSGN 4031/14/R0

SUPERSEDES NO. FOR CKT:- CK79/870/B

SUPERSEDES NO. FOR PCB:- PA79/558/B

ADOR WELDING LIMITED

PUNE - 411019

Cannot open file D:\Documents and Settings\cell2. ADOR\My Documents\My Pictures\ador logo.wmf.

CIRCUIT DIAG. FOR

PWM CUM

IGBT DRIVER PCB

CK79/870/B1

PA79/558/B1