BURR FREE	REMOVE ALL SHARP CORNERS	APPLY RUST PREVENTIVE OIL TO ALL MACHINED SURFACES	ALL FABRICATED & STEEL ITEMS TO BE PAINTED WITH RED OXIDE	DO NOT SCALE DRG.	IF IN DOUBT ASK

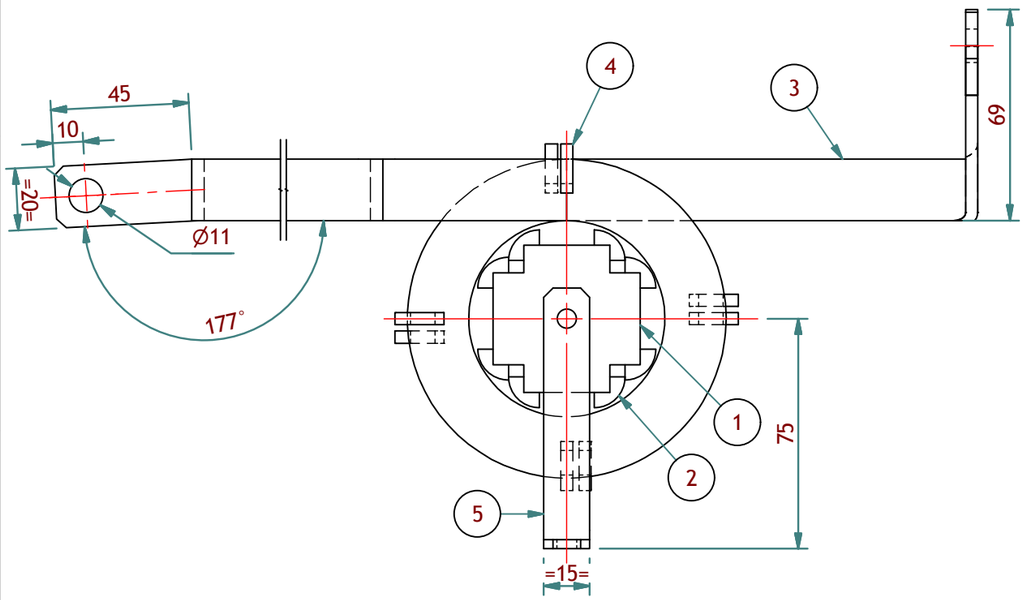

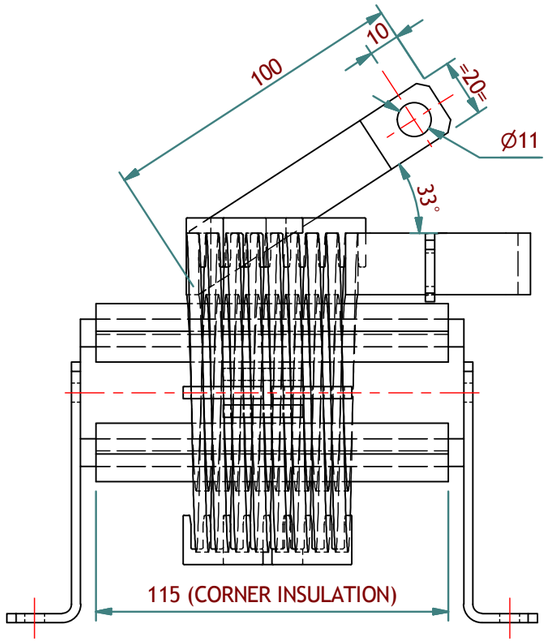

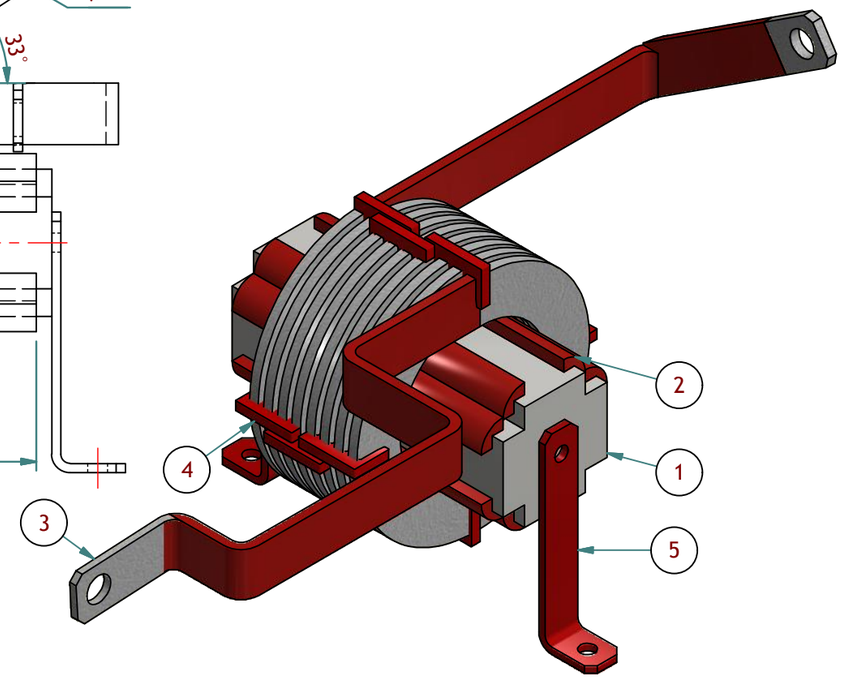

ISOMETRIC VIEW

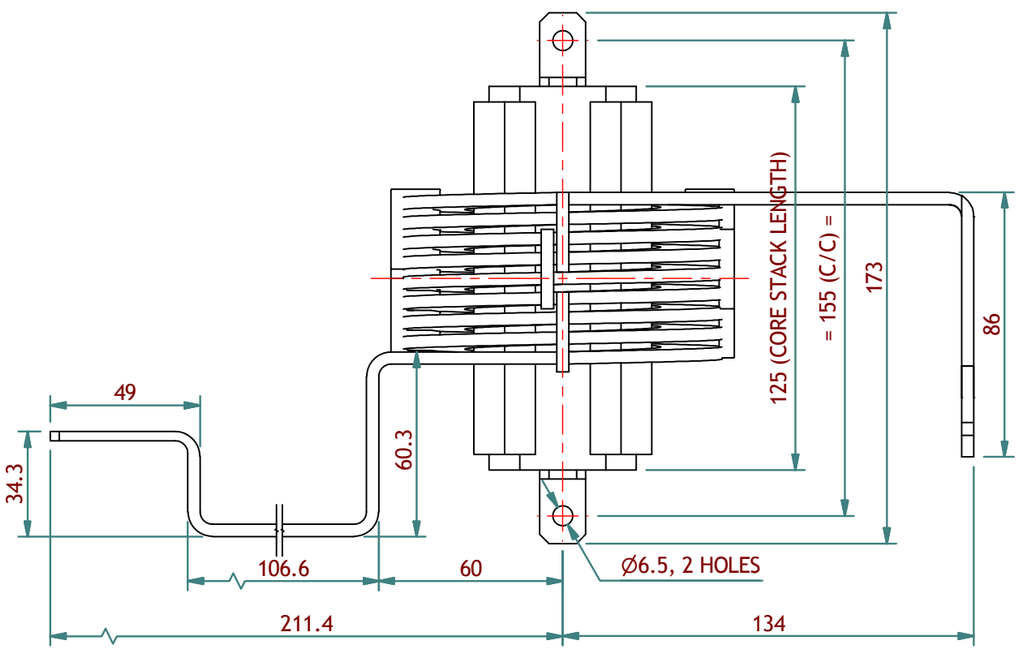

NOTE:-

1) TOLERANCE AS PER IS:2102, TABLE-1, CLASS OF DEVIATION-MEDIUM.
2) CORNER INSULATIONS & MOUNTING PLATE SHOULD BE PASTED ON OUTPUT CHOKE STACK WITH LOCTITE. TYPE: SUPERBONDER 406.
3) FOR COIL REFER COIL DATA - CL79/305
4) TO BE VARNISHED, CLASS OF INSULATION 'H'
5) ALL MATERIAL, HARDWARE AND FINISH USED IN THE MANUFACTURE OF THIS ITEM SHOULD BE RoHS COMPLIANT.

CODE NO:- 017.01.002.1481

SR.	DESCRIPTION	CODE/DWG. NO	MATERIAL	SIZE	QTY	FINESH WT.	REMARK
5	MOUNTING BRACKET FABRICATED FOR OUTPUT CHOKE	081.06.008.2626	M.S. CRCA	-	2	0.03	
4	KOMB SPACER	002.02.012.0002	Nylon 6/6	-	12	0	
3	BARE ALUMINIUM CONDUCTOR	001.02.011.0013	Aluminum	-	1	0.56	
2	CORNER INSULATION	011.14.006.0517	DMC		8	0.01	
1	CORE STACK	017.01.002.1017	M.S. CRNO		1	1.91	

INDEX	MOD. NO.	DESCRIPTION	DATE	SIGN.	INDEX	MOD. NO.	DESCRIPTION	DATE	SIGN.

ALL DIMENSIONS IN MM
▽ ROUGH ▽▽SMOOTH ▽▽▽ FINISH

PROJECT :- INVERTER BASED POWER SOURCE

MODEL :- CHAMP VERSA 400

This Design /Drawing /Document is an exclusive Intellectual Property of ADOR Welding Limited & is to be used only / strictly for the purpose for which it is lent / sent. This shall not be copied in whole or in part or used for any other purpose without the written consent of ADOR Welding Limited, to avoid any legal action

2019	DATE	SIGN.
DRWN. BY		
CHKD. BY		
APRD. BY		

SCALE : 1:2

FILE NAME: Output Choke Assembly With Components Versa 400.iam

DSGN 4031/I5/R0

ADOR WELDING LIMITED
PUNE - 411019

OUTPUT CHOKE ASSEMBLY WITH COMPONENTS

(RoHS COMPLIANT)

ador WELDING

E379-137-12

SUPERSEDES No.

SUPERSEDED BY No.

MW01X:\STATIC\CHAMP MULTI400\Workspace\Cellulosic Same As Champ T & Mig Multi 400\OUTPUT CHOKE PULSE ZVZCS\Workspace\Champ Pulse 500 ZVZCS With CE\Output Choke For Pulse Mig 500_B\Output Choke Assembly With Components Versa 400.iam