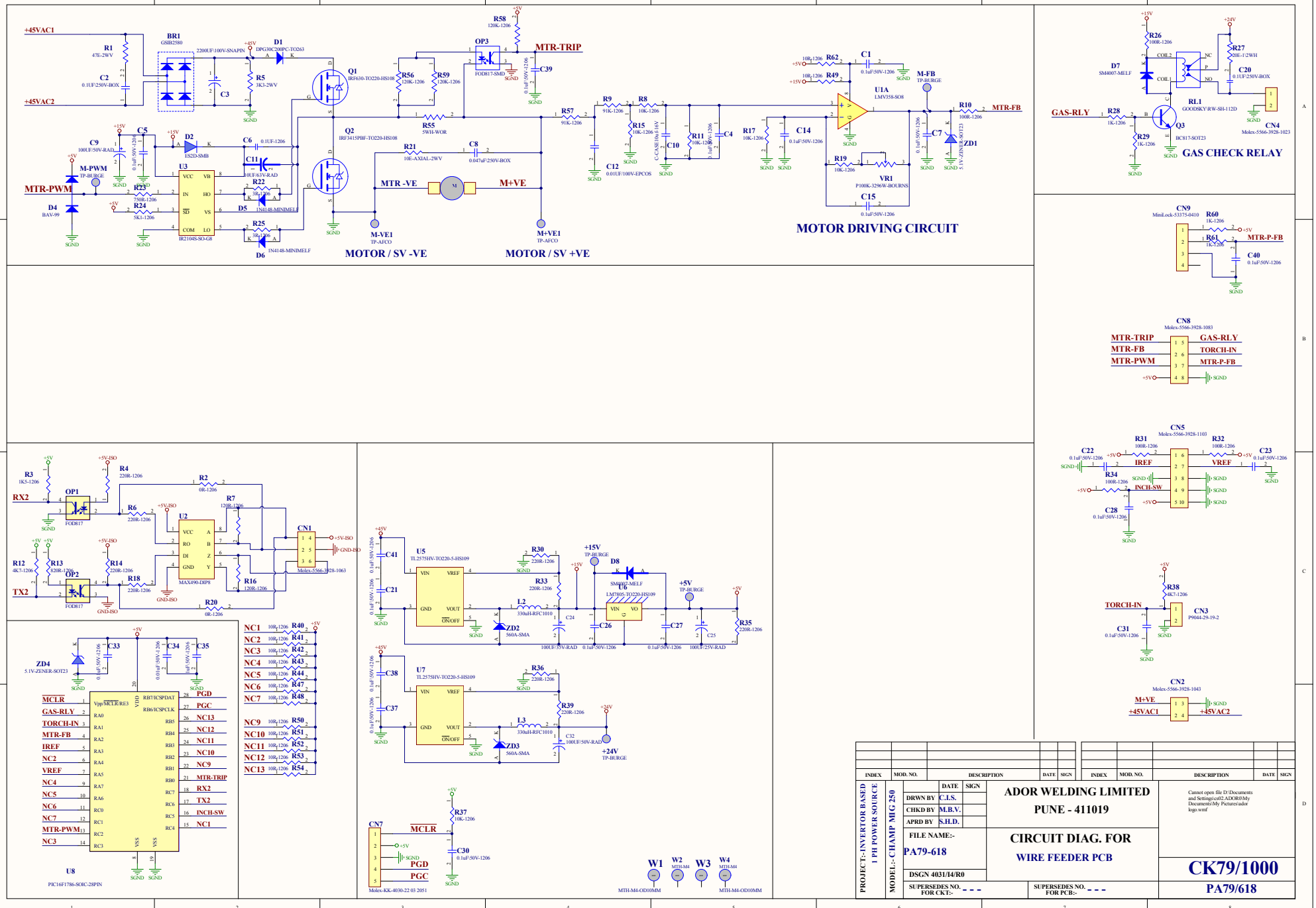

INDEX	MOD. NO.	DESCRIPTION	DATE	SIGN	INDEX	MOD. NO.	DESCRIPTION	DATE	SIGN

PROJECT:- INVERTOR BASED 1 PH POWER SOURCE

MODEL:- CHAMP MIG 250

	DATE	SIGN
DRWN BY	C.I.S.	
CHKD BY	M.B.V.	
APRD BY	S.H.D.	

FILE NAME:- PA79-618

DSGN 4031/14/R0

SUPERSEDES NO. FOR CKT:- - - -

SUPERSEDES NO. FOR PCB:- - - -

ADOR WELDING LIMITED

PUNE - 411019

CIRCUIT DIAG. FOR

WIRE FEEDER PCB

Cannot open file D:/Documents and Settings/cst02.ADOR/0/My Documents/My Pictures/ador logo.wmf

CK79/1000

PA79/618