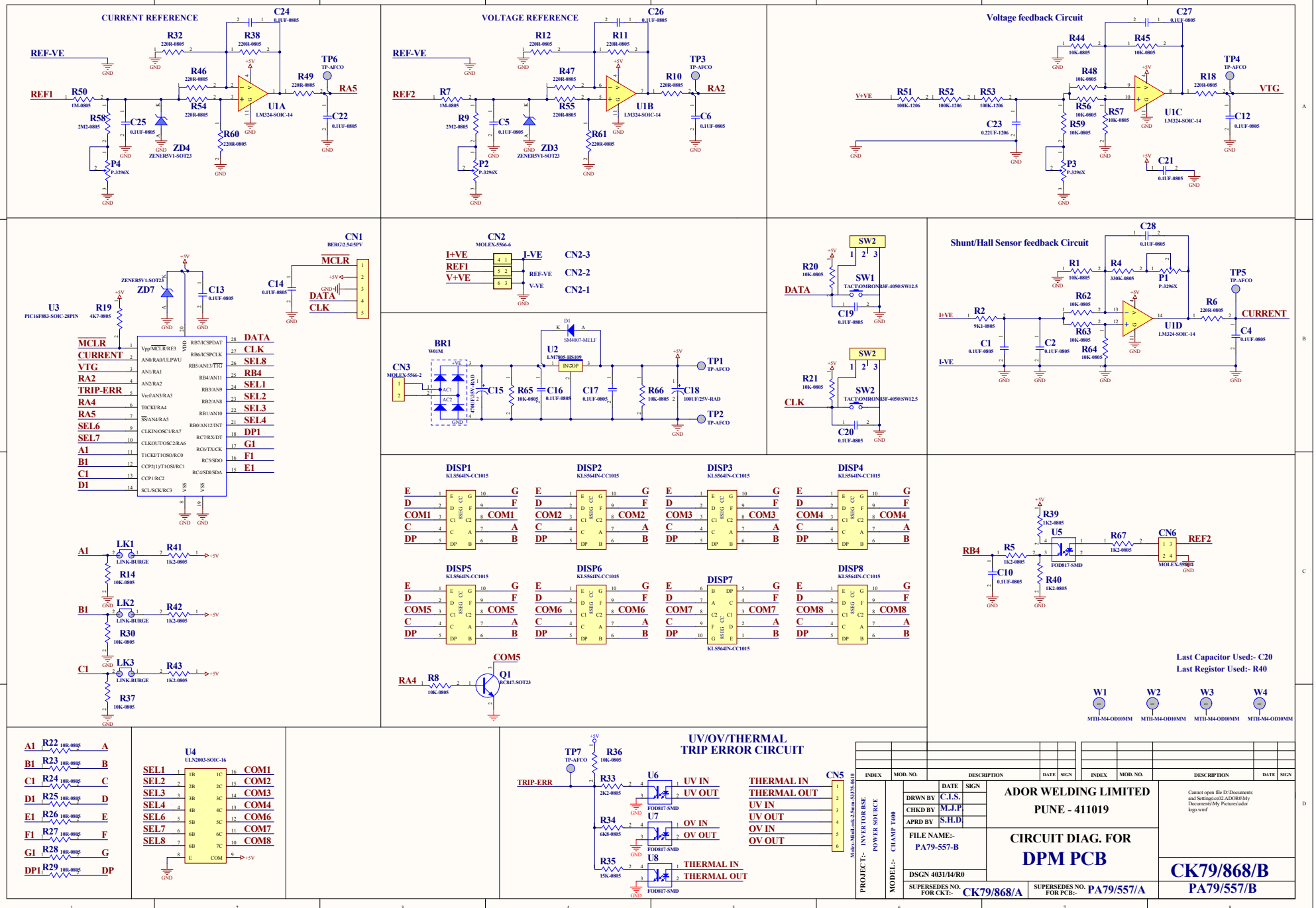
CURRENT REFERENCE
VOLTAGE REFERENCE
Voltage feedback Circuit
Shunt/Hall Sensor feedback Circuit
REF-VE
REF1
REF2
RA5
RA2
VTG
CURRENT
I-VE
V+VE
TP6 TP-AFCO
TP3 TP-AFCO
TP4 TP-AFCO
TP5 TP-AFCO
U1A LM324-SOIC-14
U1B LM324-SOIC-14
U1C LM324-SOIC-14
U1D LM324-SOIC-14
ZD4 ZENER5V1-SOT23
ZD3 ZENER5V1-SOT23
P4 P-3296X
P2 P-3296X
P3 P-3296X
P1 P-3296X
CN1 BERG2.54-SPV
MCLR
DATA
CLK
CN2 MOLEX-5566-6
I+VE
REF1
V+VE
I-VE
REF-VE
V-VE
CN2-3
CN2-2
CN2-1
U3 PIC16F883-SOIC-28PIN
ZD7 ZENER5V1-SOT23
CN3 MOLEX-5566-2
BR1 W01M
U2 LM7805-HS109
SM4007-MELF
TP1 TP-AFCO
TP2 TP-AFCO
SW2 TACTOMRON83F-4050/SW12.5
DISP1 KLS564IN-CC1015
DISP2 KLS564IN-CC1015
DISP3 KLS564IN-CC1015
DISP4 KLS564IN-CC1015
DISP5 KLS564IN-CC1015
DISP6 KLS564IN-CC1015
DISP7 KLS564IN-CC1015
DISP8 KLS564IN-CC1015
Q1 BC847-SOT23
CN6 MOLEX-5566-2
REF2
Last Capacitor Used:- C20
Last Registor Used:- R40
W1 MTH-M4-OD10MM
W2 MTH-M4-OD10MM
W3 MTH-M4-OD10MM
W4 MTH-M4-OD10MM
U4 ULN2003-SOIC-16
UV/OV/THERMAL
TRIP ERROR CIRCUIT
TRIP-ERR
TP7 TP-AFCO
U6 FOD817-SMD
U7 FOD817-SMD
U8 FOD817-SMD
UV IN
UV OUT
OV IN
OV OUT
THERMAL IN
THERMAL OUT
CN5
INDEX
MOD. NO.
DESCRIPTION
DATE
SIGN
PROJECT:- INVERTOR BSE POWER SOURCE
MODEL:- CHAMP T400
DRWN BY C.I.S.
CHKD BY M.J.P.
APRD BY S.H.D.
FILE NAME:- PA79-557-B
DSGN 4031/14/R0
SUPERSEDES NO. FOR CK1:- CK79/868/A
SUPERSEDES NO. FOR PCB:- PA79/557/A
ADOR WELDING LIMITED
PUNE - 411019
CIRCUIT DIAG. FOR
DPM PCB
CK79/868/B
PA79/557/B
Cannot open file D:/Documents and Settings/cis02.ADOR/My Documents/My Pictures/ador logo.wmf