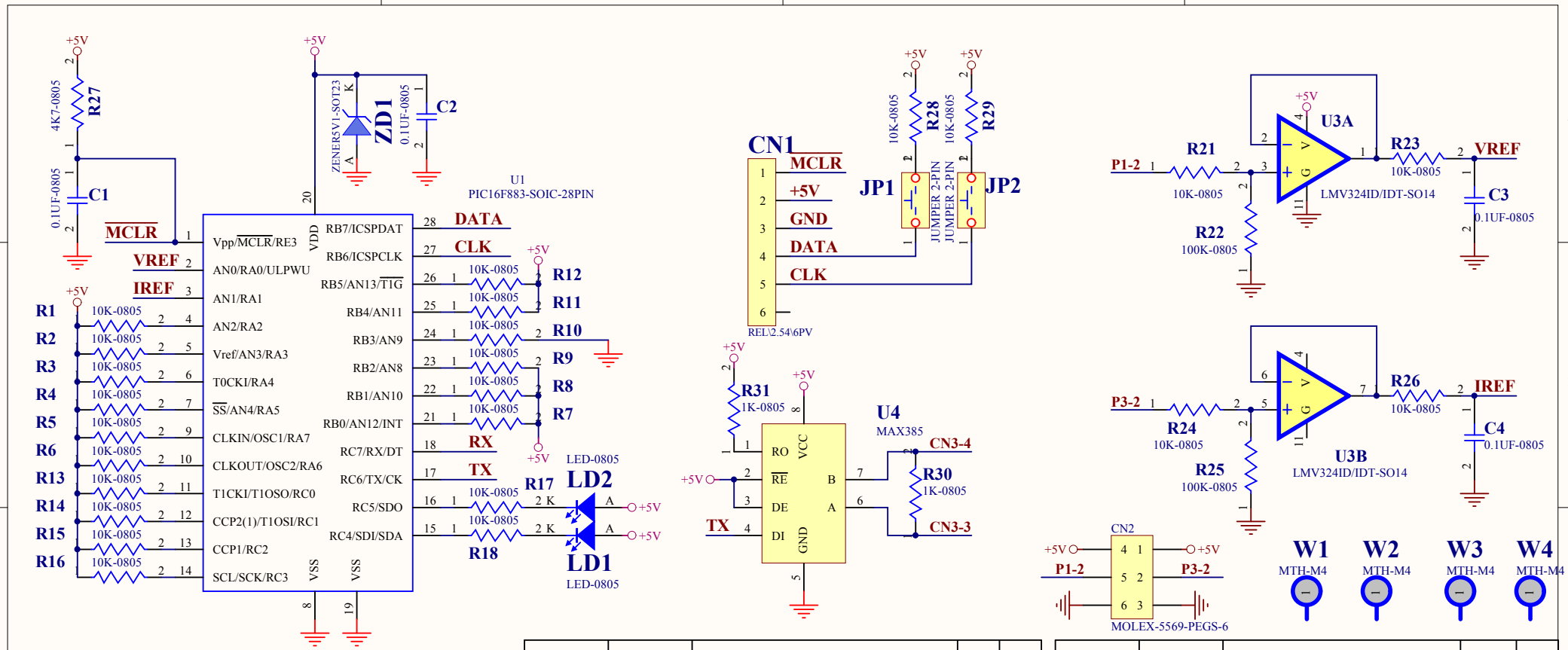

INDEX	MOD. NO.	DESCRIPTION	DATE	SIGN

INDEX	MOD. NO.	DESCRIPTION	DATE	SIGN

PROJECT:- INVERTOR BASE BASE POWER SOURCE

MODEL:- CHAMP 400

	DATE	SIGN
DRWN BY	CIS	
CHKD BY	NS	
APRD BY	SHD	

FILE NAME:-

PA79-513-B

DSGN 4031/I4/R0

ADOR WELDING LIMITED
PUNE - 411019

CIRCUIT DIAG. FOR ANALOG REMOTE CONTROLLER PCB

Cannot open file D:\Documents and Settings\cs02.ADOR0\My Documents\My Pictures\ador logo.wmf

CK79/744/B

SUPERSEDES NO. FOR CKT:- CK79/744/A

SUPERSEDES NO. FOR PCB:- PA79/513/A

PA79/513/B