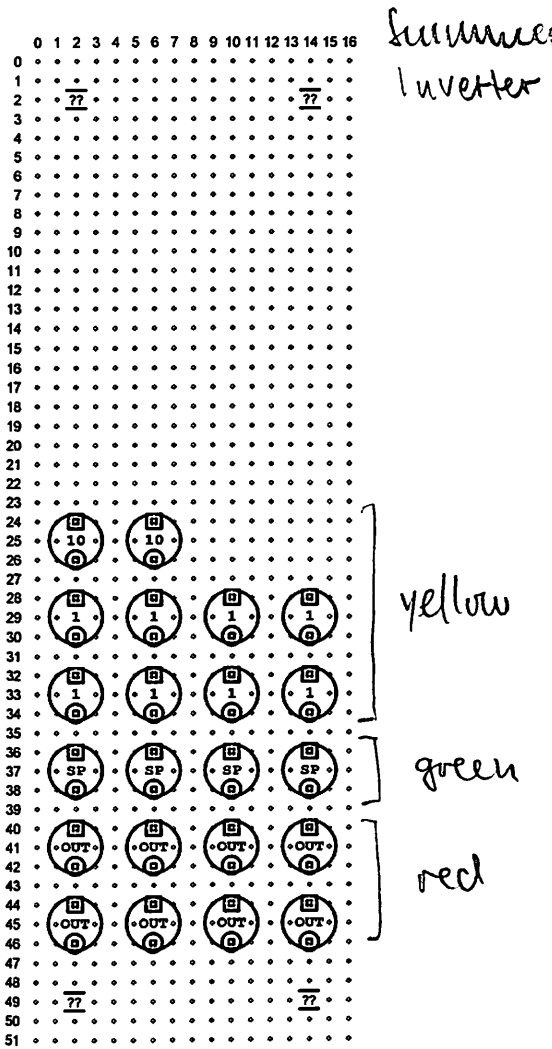

Summer/ Panel Inverter

yellow

green

red

F

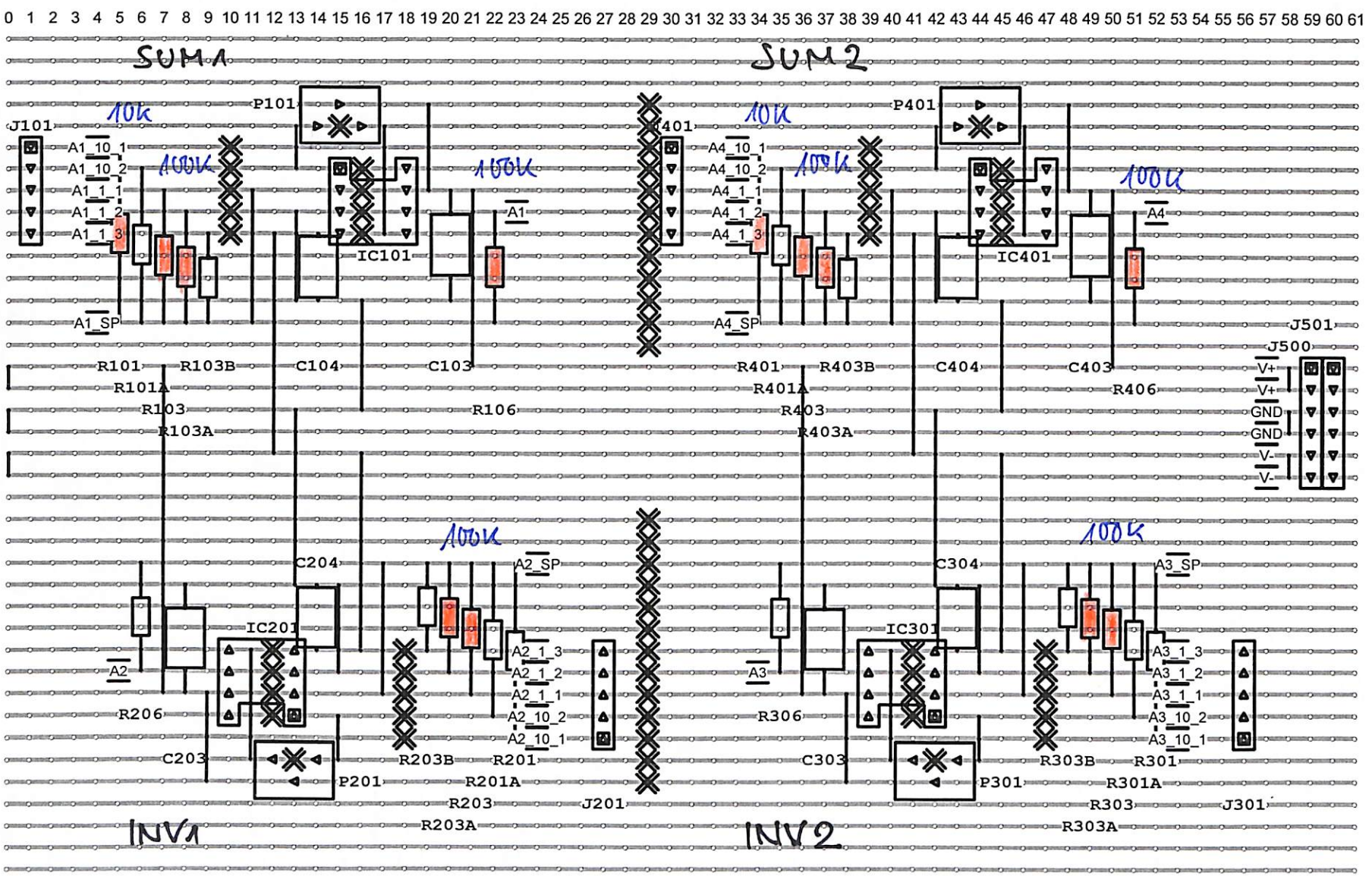
SUM1
SUM2
INV1
INV2
J101
P101
IC101
P401
IC401
J501
J500
IC201
IC301
P201
P301
J201
J301
10k
100k
A1_10_1
A1_10_2
A1_1_1
A1_1_2
A1_1_3
A1_SP
A1
A4_10_1
A4_10_2
A4_1_1
A4_1_2
A4_1_3
A4_SP
A4
A2
A2_SP
A2_1_3
A2_1_2
A2_1_1
A2_10_2
A2_10_1
A3
A3_SP
A3_1_3
A3_1_2
A3_1_1
A3_10_2
A3_10_1
R101
R101A
R103
R103A
R103B
C104
C103
R106
R401
R401A
R403
R403A
R403B
C404
C403
R406
V+
V+
GND
GND
V-
V-
C204
C203
R206
R203B
R201
R201A
R203
R203A
C304
C303
R306
R303B
R301
R301A
R303
R303A

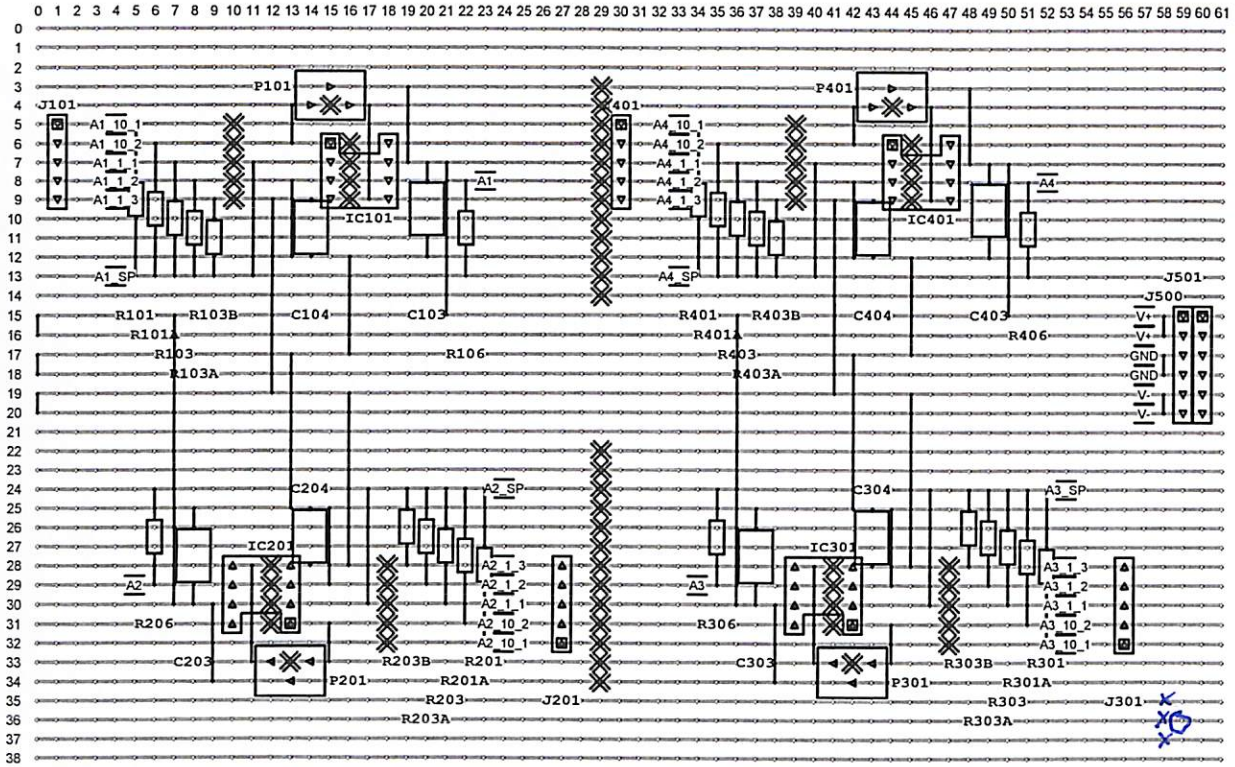
J101
P101
IC101
A1_10_1
A1_10_2
A1_1_1
A1_1_2
A1_1_3
A1_SP
A1
R101
R101A
R103
R103A
R103B
C104
C103
R106
C204
IC201
A2
R206
C203
P201
A2_SP
A2_1_3
A2_1_2
A2_1_1
A2_10_2
A2_10_1
R203B
R201
R201A
R203
R203A
J201
J401
P401
IC401
A4_10_1
A4_10_2
A4_1_1
A4_1_2
A4_1_3
A4_SP
A4
R401
R401A
R403
R403A
R403B
C404
C403
R406
C304
IC301
A3
R306
C303
P301
A3_SP
A3_1_3
A3_1_2
A3_1_1
A3_10_2
A3_10_1
R303B
R301
R301A
R303
R303A
J301
J501
J500
V+
V+
GND
GND
V-
V-

R

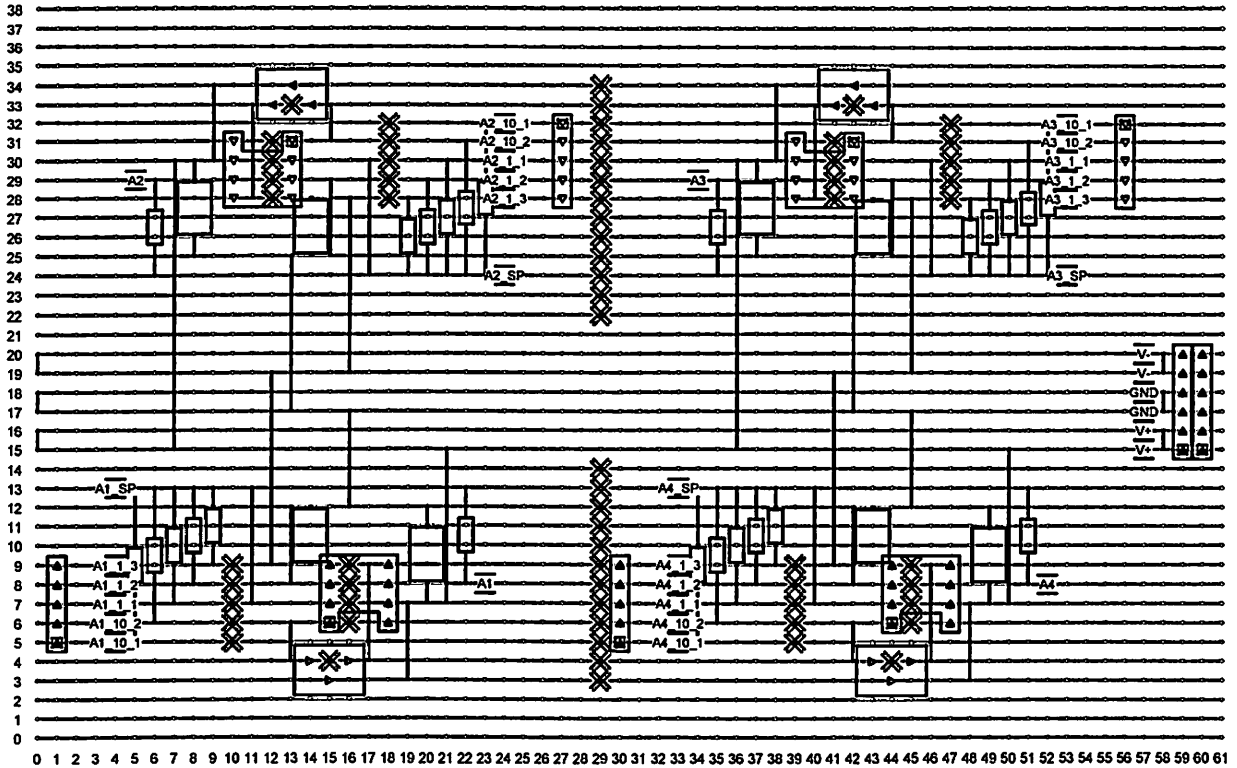
A2
A2_10_1
A2_10_2
A2_1_1
A2_1_2
A2_1_3
A2_SP
A3
A3_10_1
A3_10_2
A3_1_1
A3_1_2
A3_1_3
A3_SP
V-
V-
GND
GND
V+
V+
A1_SP
A1_1_3
A1_1_2
A1_1_1
A1_10_2
A1_10_1
A1
A4_SP
A4_1_3
A4_1_2
A4_1_1
A4_10_2
A4_10_1
A4