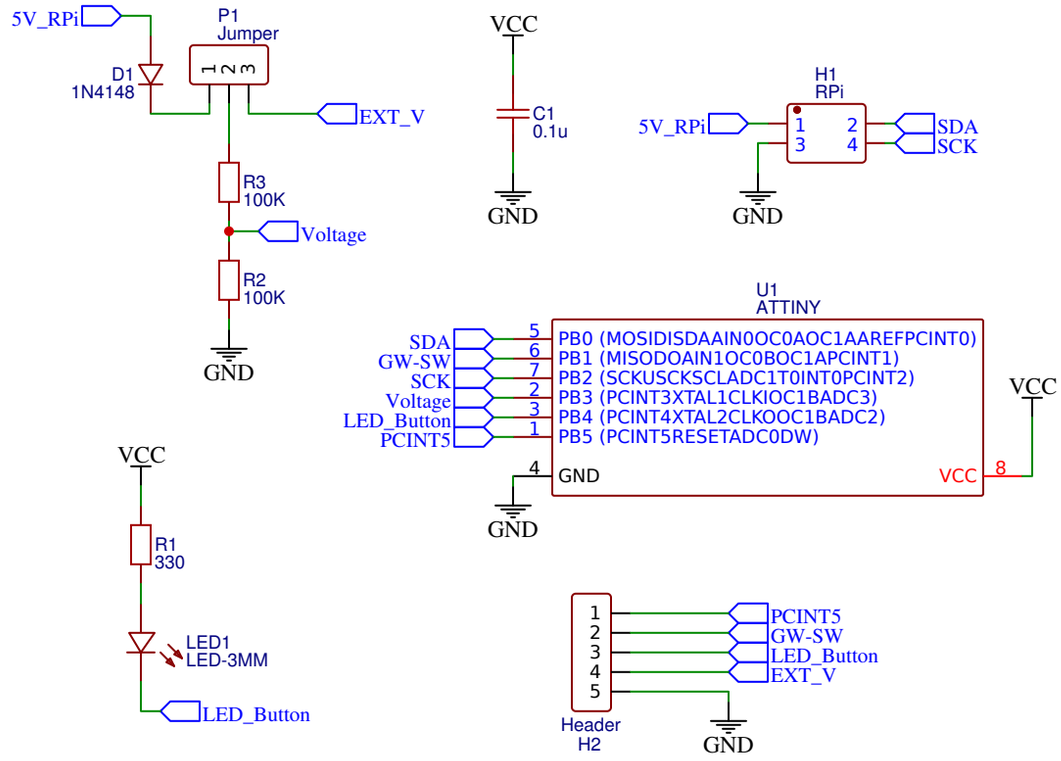

TITLE: ATTinyGeekworm		REV: 1.7
EasyEDA	Company: Joachim Baumann	Sheet: 1/1
	Date: 2019-05-29 Drawn By: jbaumann	