GUNSTOCK DIMENSIONS

GUNSTOCK MEASUREMENTS

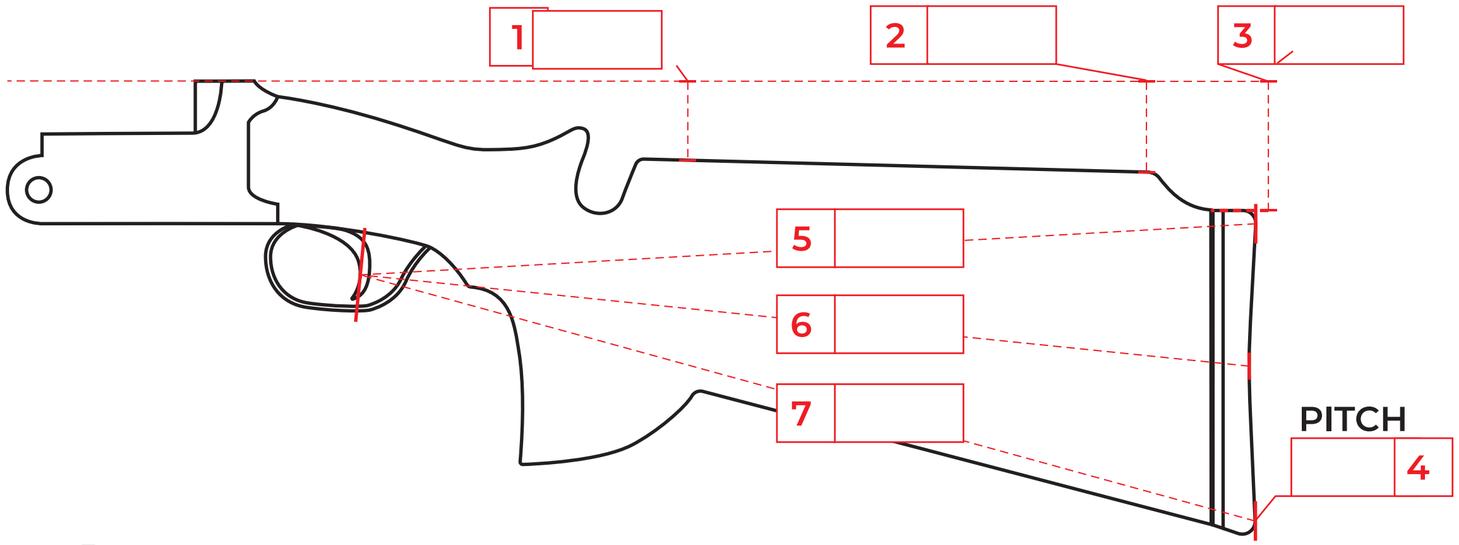

CAST

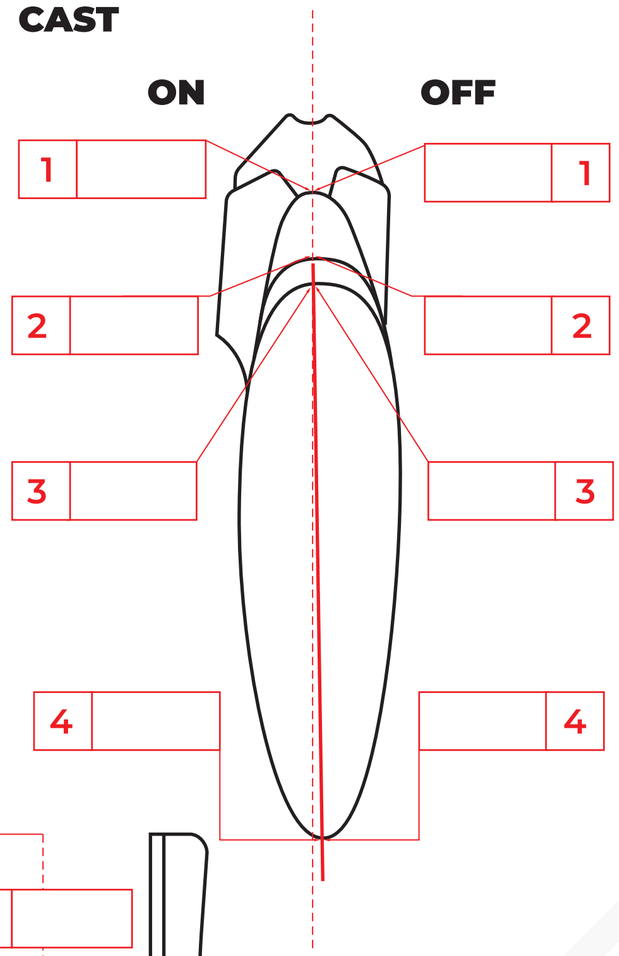

GRIP WIDTH

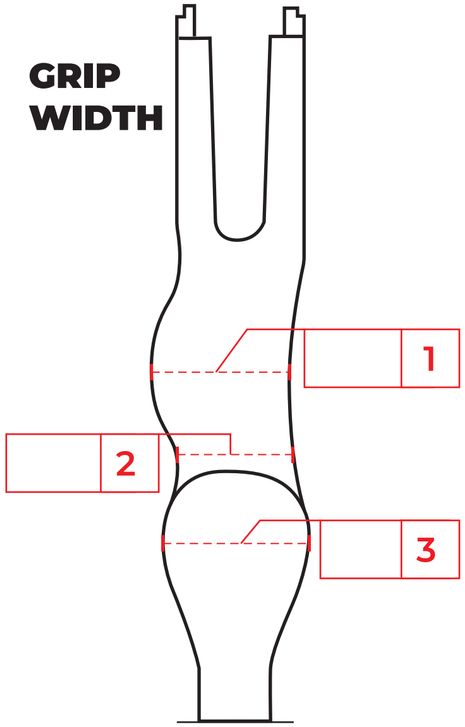

GRIP MEASUREMENTS

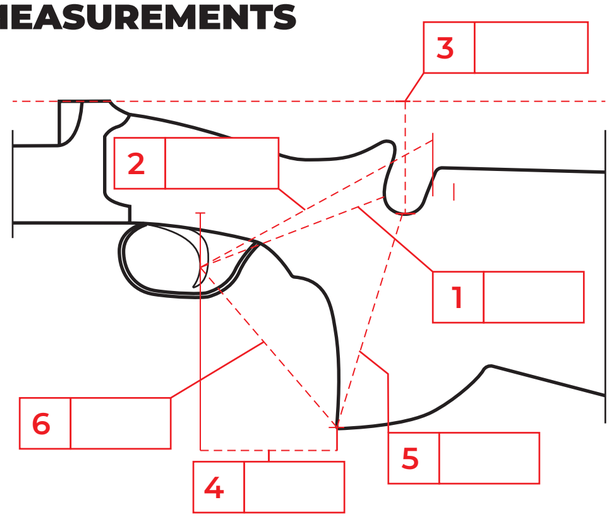

RECOIL PAD

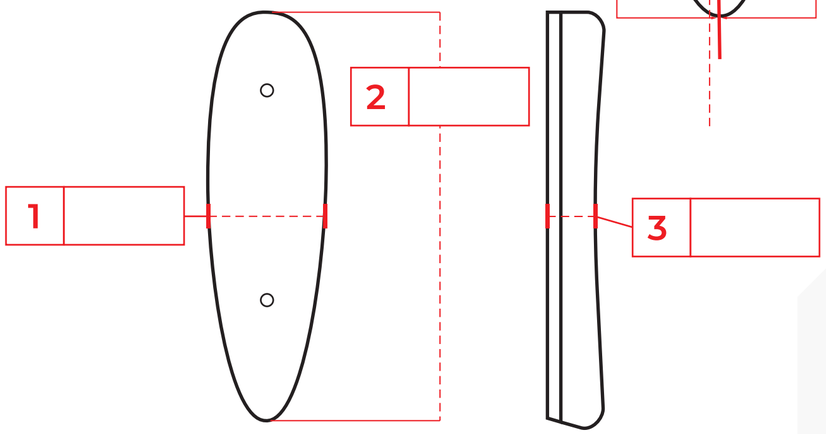

Gun: _____ Name: _____

Model: _____ Process No: _____