Cabinet Smoker

Revision 2

September 30th, 2020

Adrian Seeley

contact@adrianseeley.com

613 203 1277

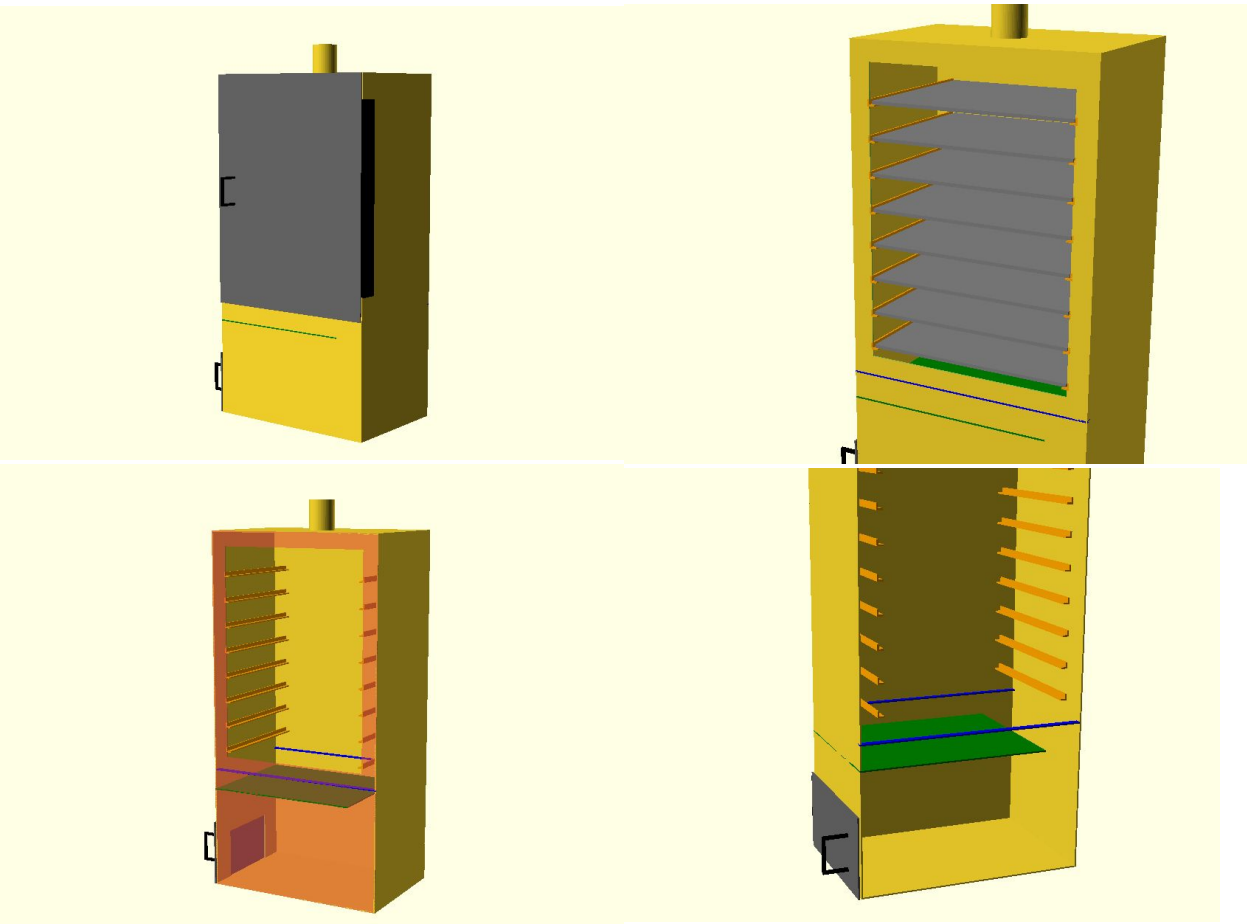

Design Notes

1. All sheet material is 1/4” steel.
2. All dimensions are rough numbers and don’t need to be exact.
3. Doors should rest flush against the cabinet, a 1/16” to 1/8" adhesive fireplace gasket will be added after construction to create a tighter seal.
4. Both the firebox door and cook chamber door will require a heat resistant latching mechanism (they don’t need to be pretty).
5. Both the firebox and cook chamber door will require heat resistant hinges (they also don’t need to be pretty).
6. Both the firebox and cook chamber door will require handles.
7. The chimney diameter, height, and thickness don’t need to be exact.
8. There is approximately 100 sqft of 1/4" sheet stock in the final product, at 10.5lb/sqft that results in 1050lbs of material.
9. The rack ledges are made from 1/4" thick 1”x1” angle stock (non-stainless is fine here), the dimensions of this material don’t need to be exactly as listed here so long as it can comfortably hold a rack full of meat.
10. There is approximately 32 ft of angle stock for the rack ledges.
11. The racks are made from 1/2" stainless square tube, and #9 3/4" flattened expanded stainless. The racks are the only food point of contact and must be washable, stainless is a must here.
12. There is approximately 70 ft of 1/2" stainless square tube and 40 sqft of #9 3/4" flattened expanded stainless in the racks.
13. The intention is to move the smoker using a forklift, I don’t know structurally what would be required for that to be possible - I’m open to any suggestions.

Overall Dimensions

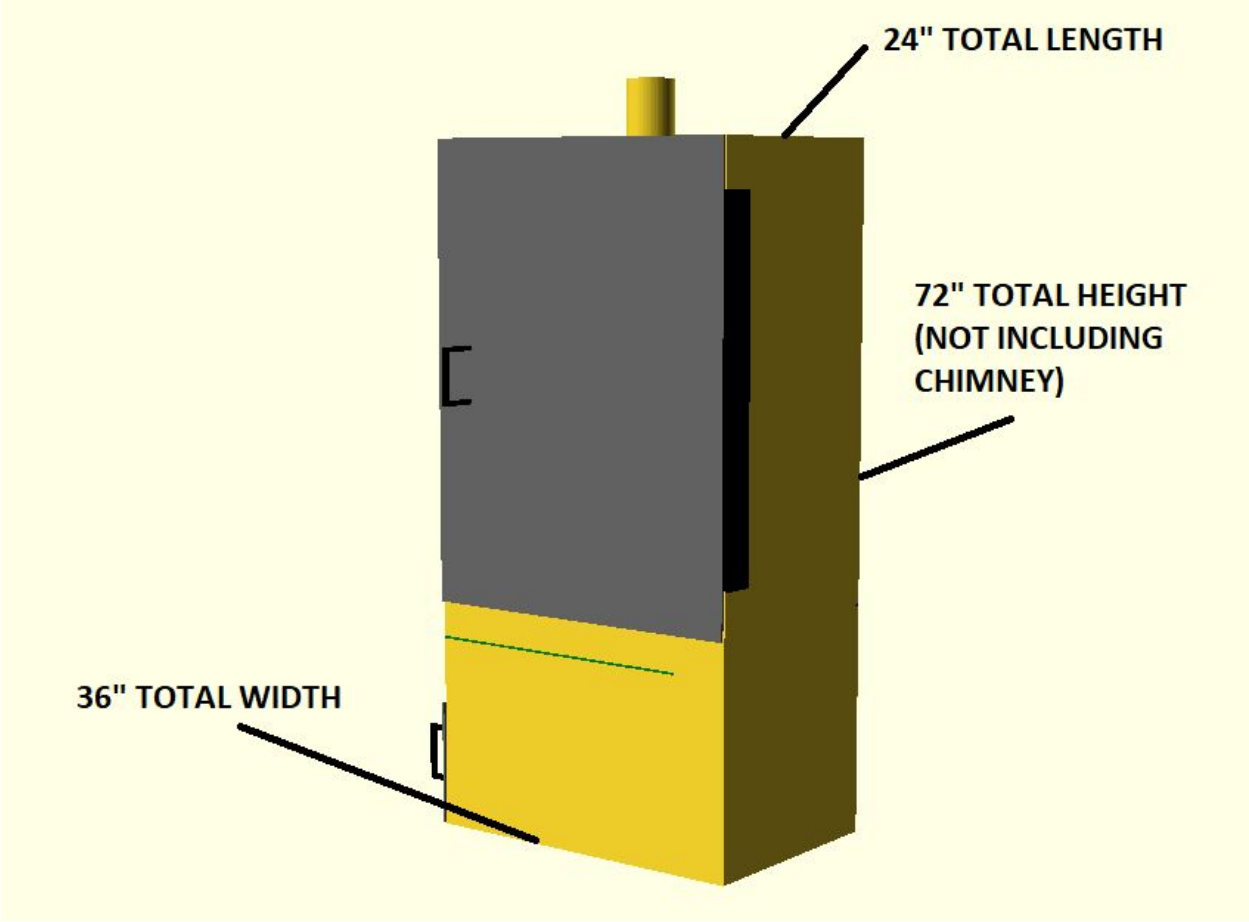

Cook Chamber Door Dimensions

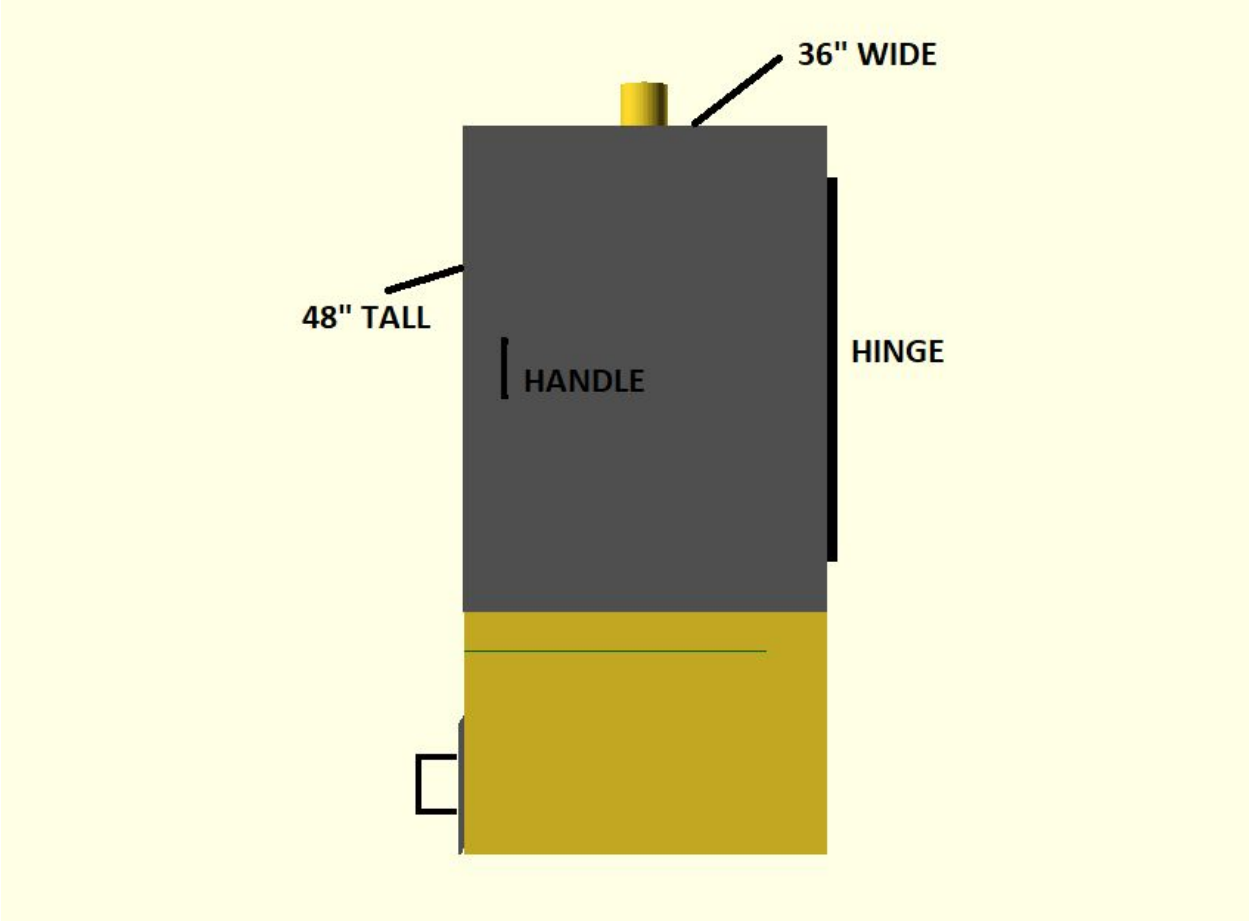

Firebox Door Dimensions

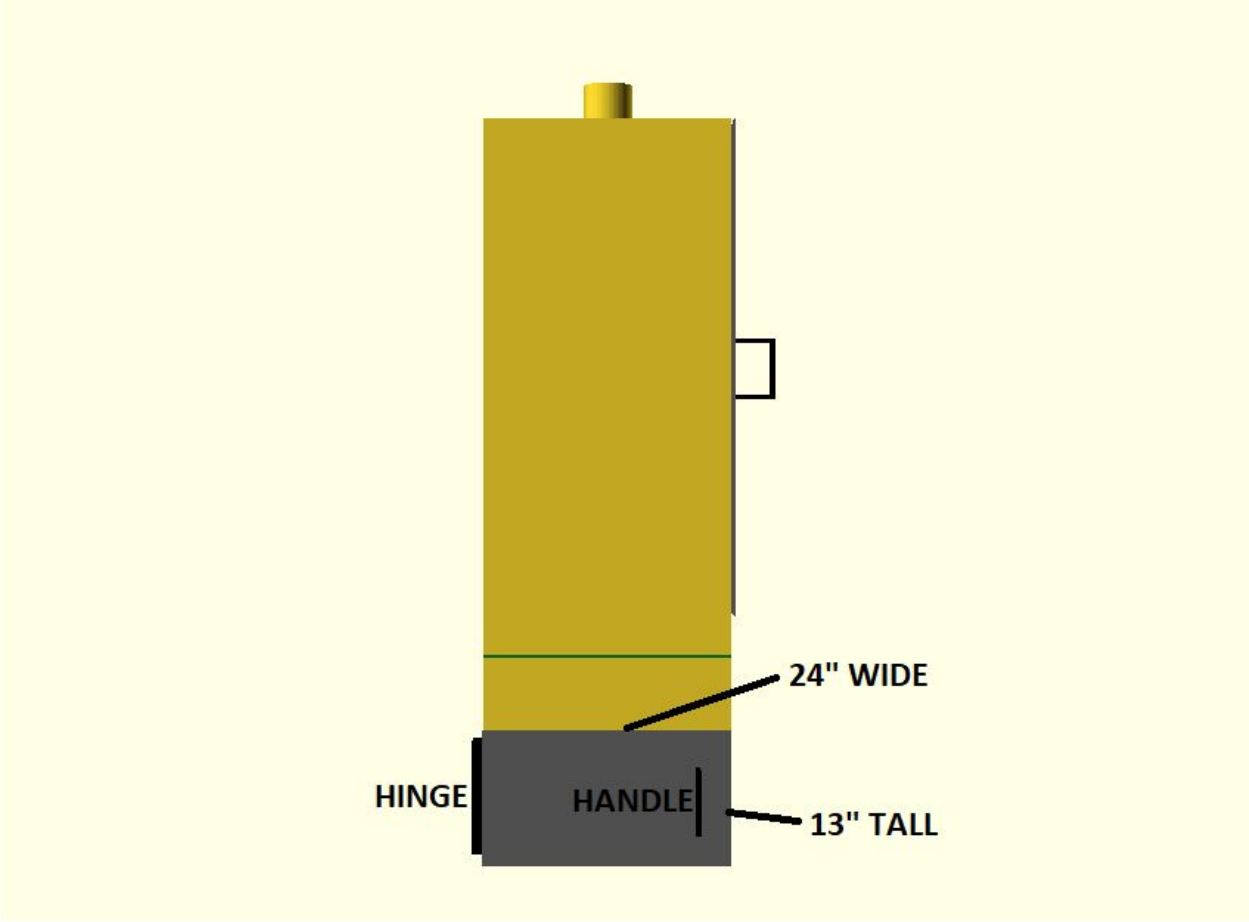

Firebox Opening Dimensions

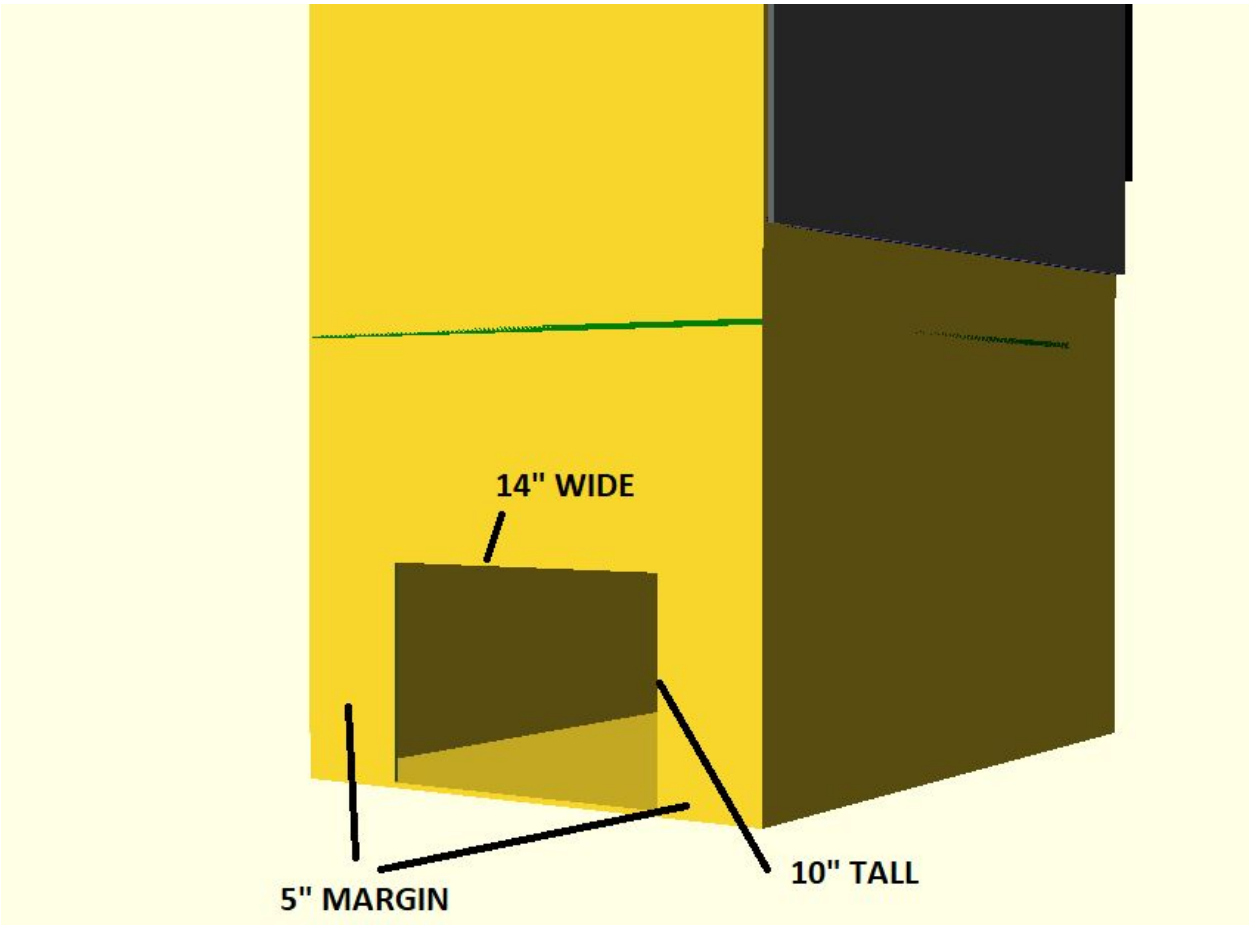

Cook Chamber Opening Dimensions

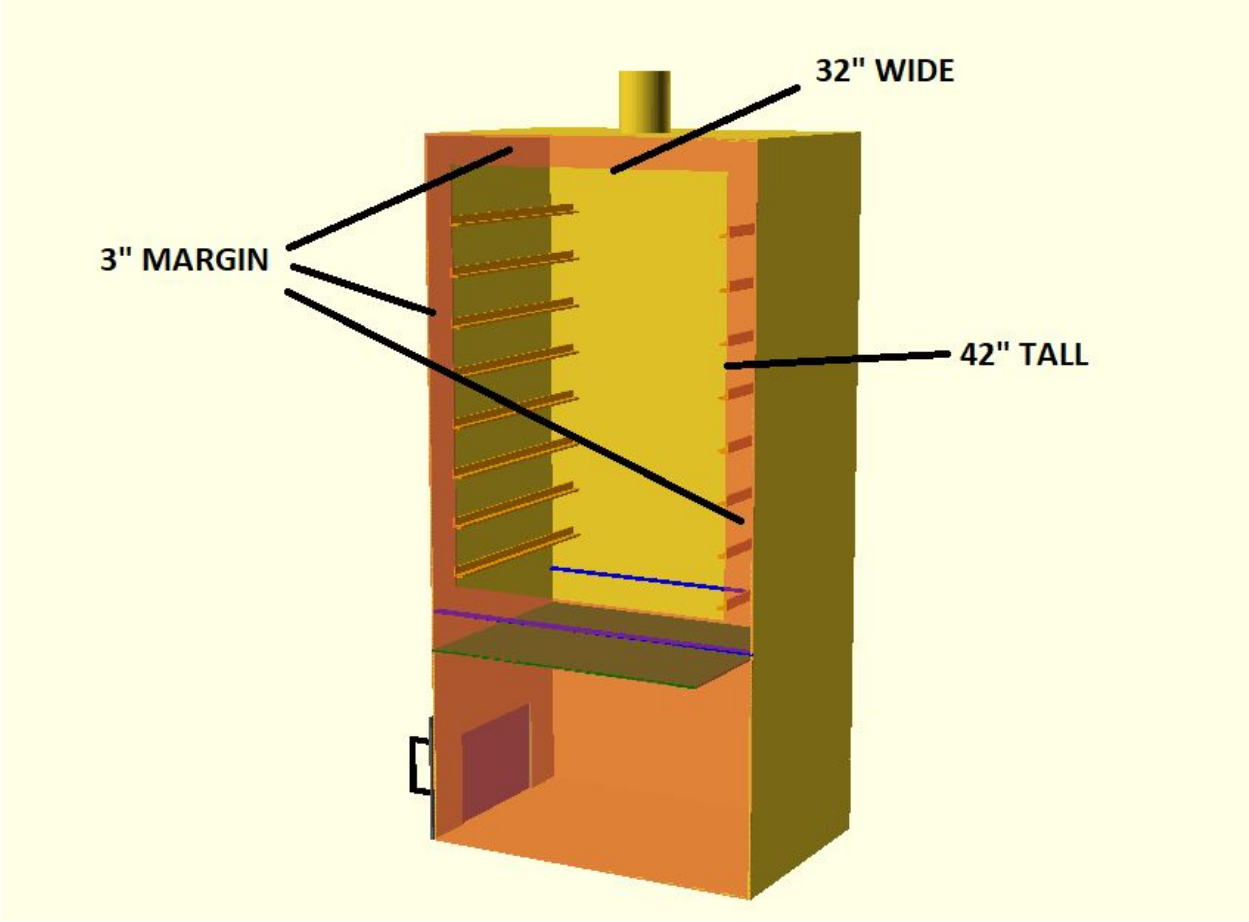

Cook Chamber Ledge Dimensions

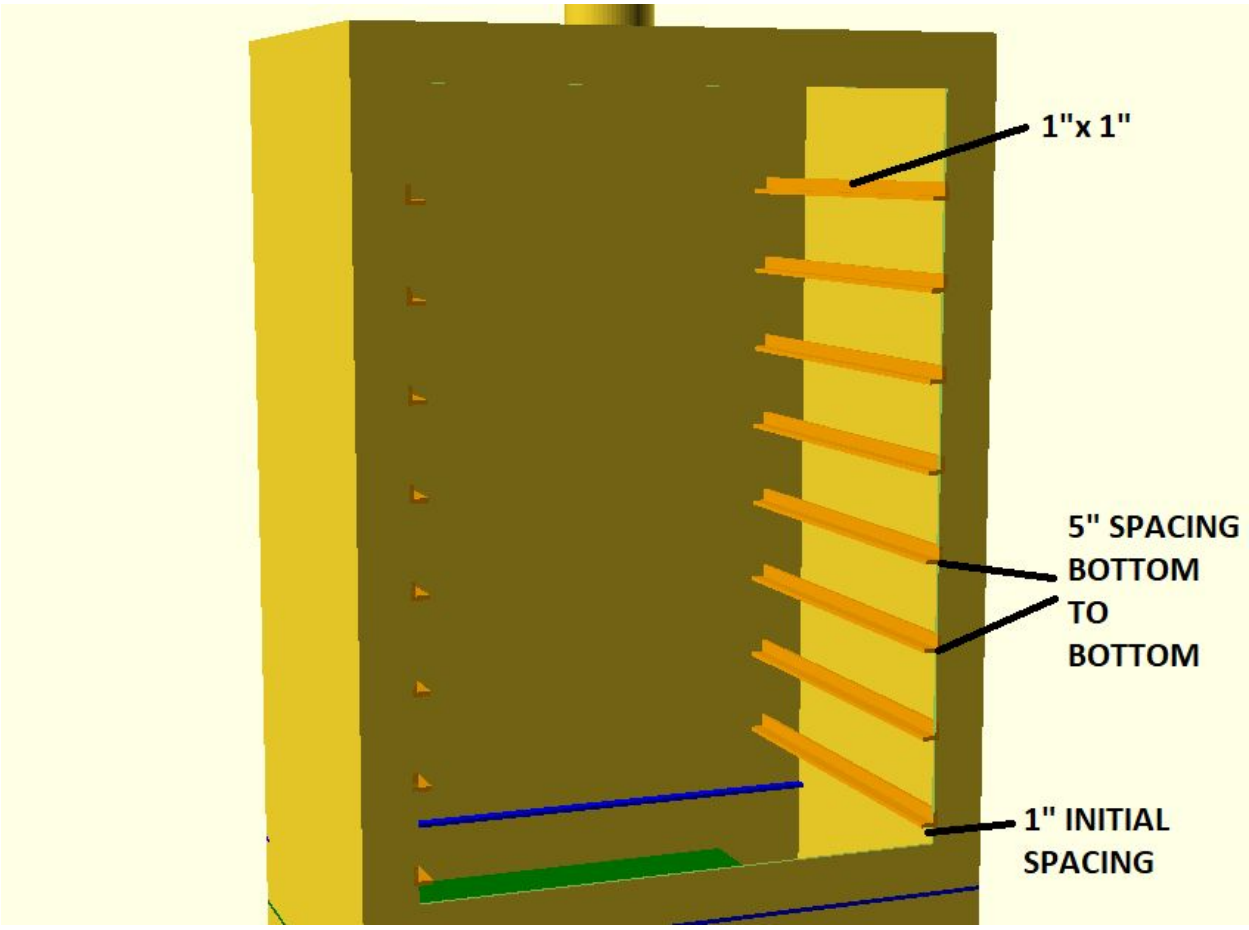

- Although it is difficult to see in this rendering the ledges should be attached to the edge of the cook chamber door opening, allowing a full rack to fit through the opening and sit on the ledges without tilting it to get it in.
- The 1” initial spacing (read: gap) under the bottom ledge is to allow some space for grabbing the bottom rack from underneath to slide it in and out.
- It is important to note that the ledges should not interfere with the door closing flush.

Baffle Plate Dimensions

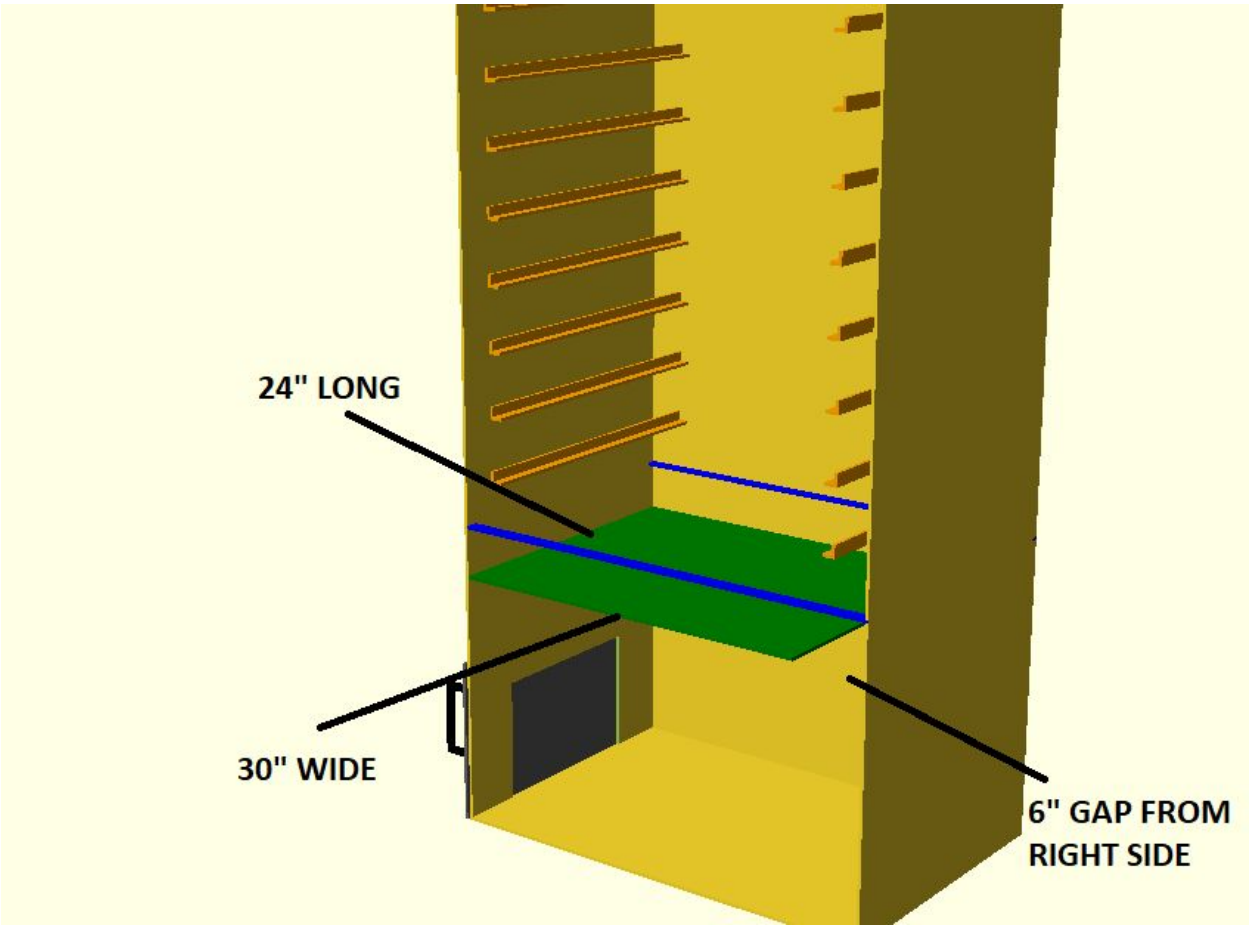

- The baffle plate is intended to block the direct heat from the fire, and force all exhaust through the 6” gap (or “throat”) on the right side.
- If the cook chamber door opening is cut from a single sheet, that material can potentially be reclaimed for the baffle plate.
- Please note that the front of the cabinet is omitted from this rendering, but in the final product would be permanently attached.

Baffle Plate and Tuning Plate Ledge Heights

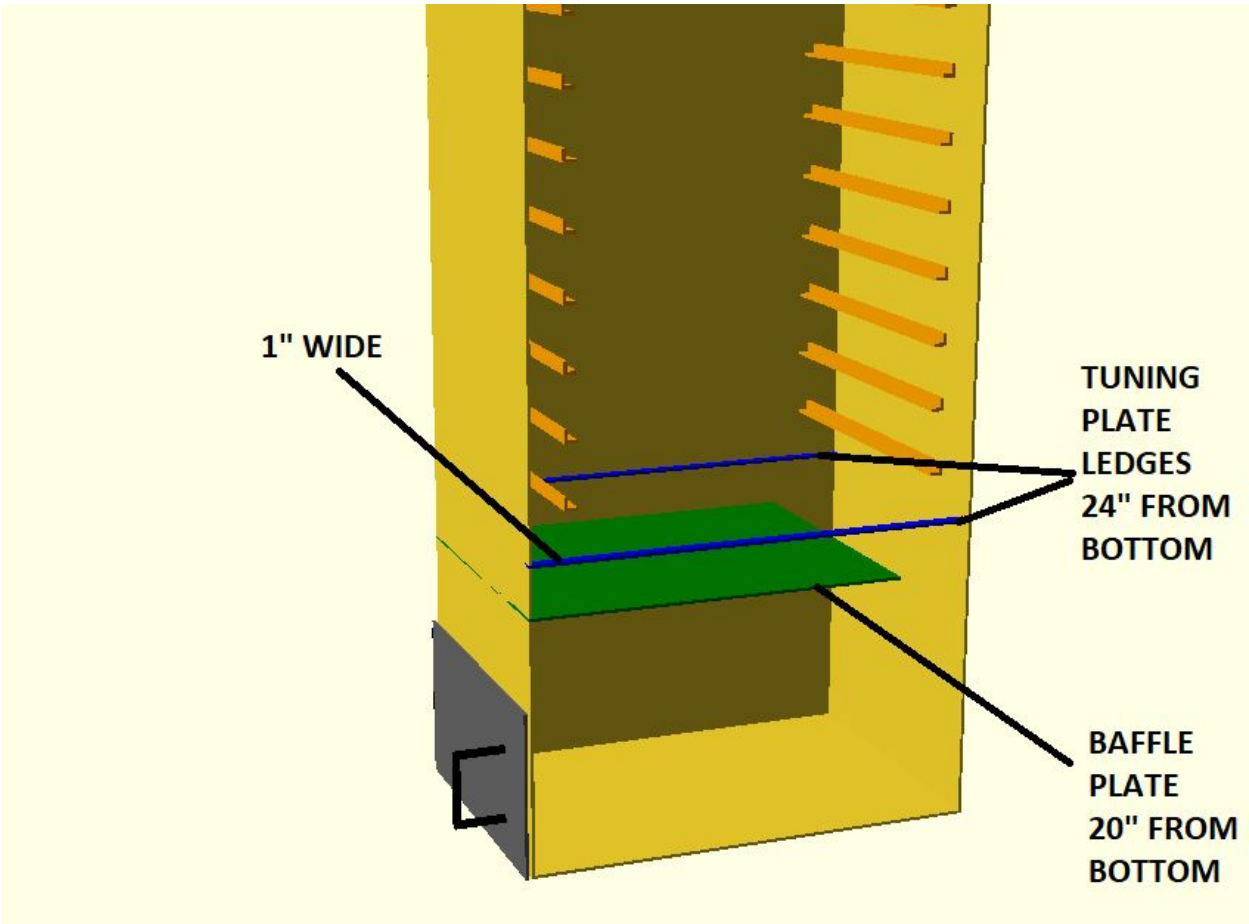

- The tuning plate ledges may make more sense as angle stock? They need to support a lot of weight and I'm not an engineer.
- Tuning plates are unattached rectangles of sheet stock that can be moved and spaced to change how heat and smoke flow through the cook chamber.
- If the cook chamber door opening is cut from a single sheet, that material can potentially be reclaimed as tuning plates.
- Tuning plates should ideally be 5" wide and there should be 6 total.
- Tuning plates should be almost the full length (approx. 24") of the cabinet from front to back, with wiggle room for easy removal and movement.

Chimney Dimensions

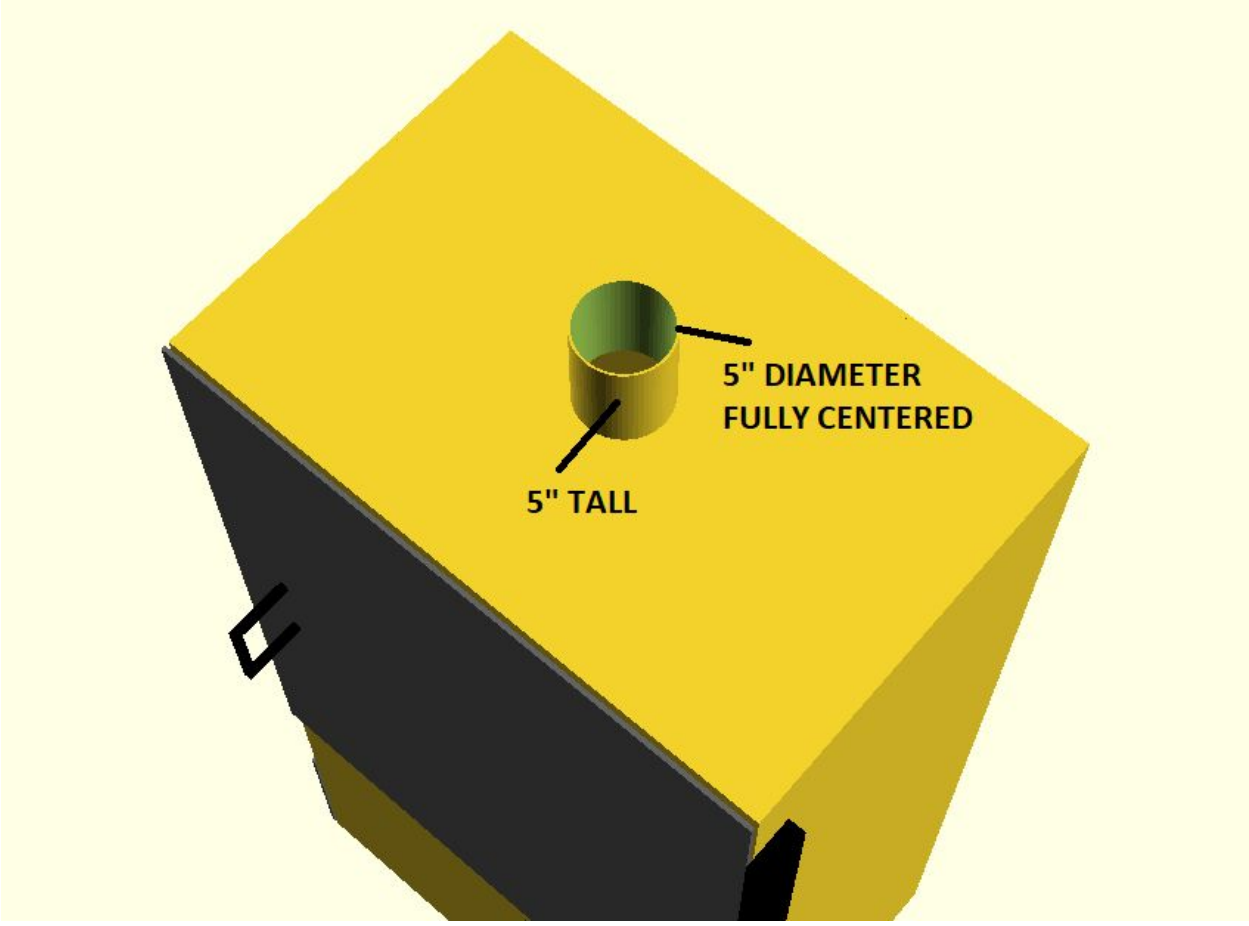

Rack Dimensions

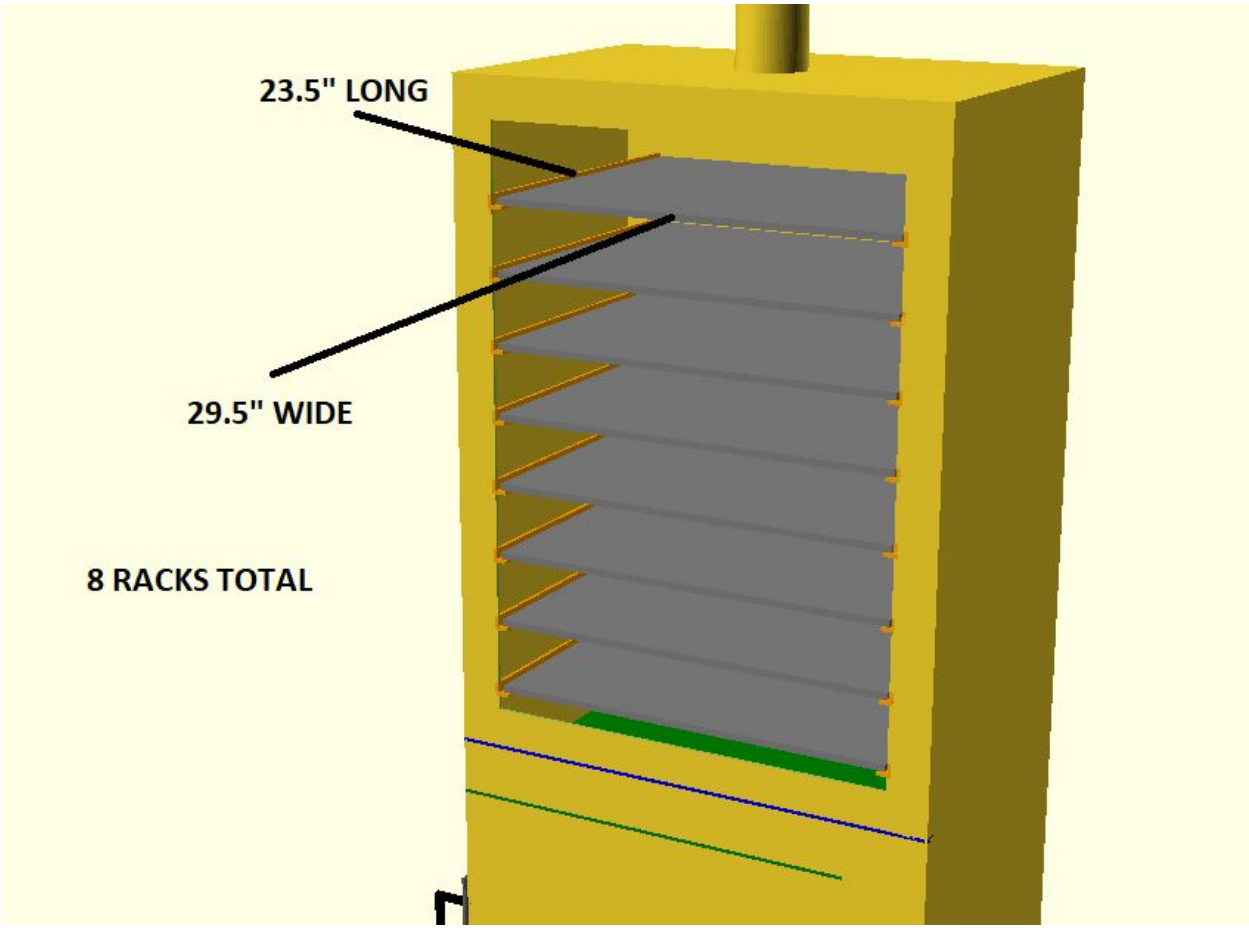

- See notes on the first page for rack materials.
- The rack dimensions are approximate and should be sized to fit on ledges with a bit of wiggle room.
- Racks are not attached to ledges, they are intended to slide in and out, be fully removed, and be cleanable separate from the rest of the smoker.

Rack Examples