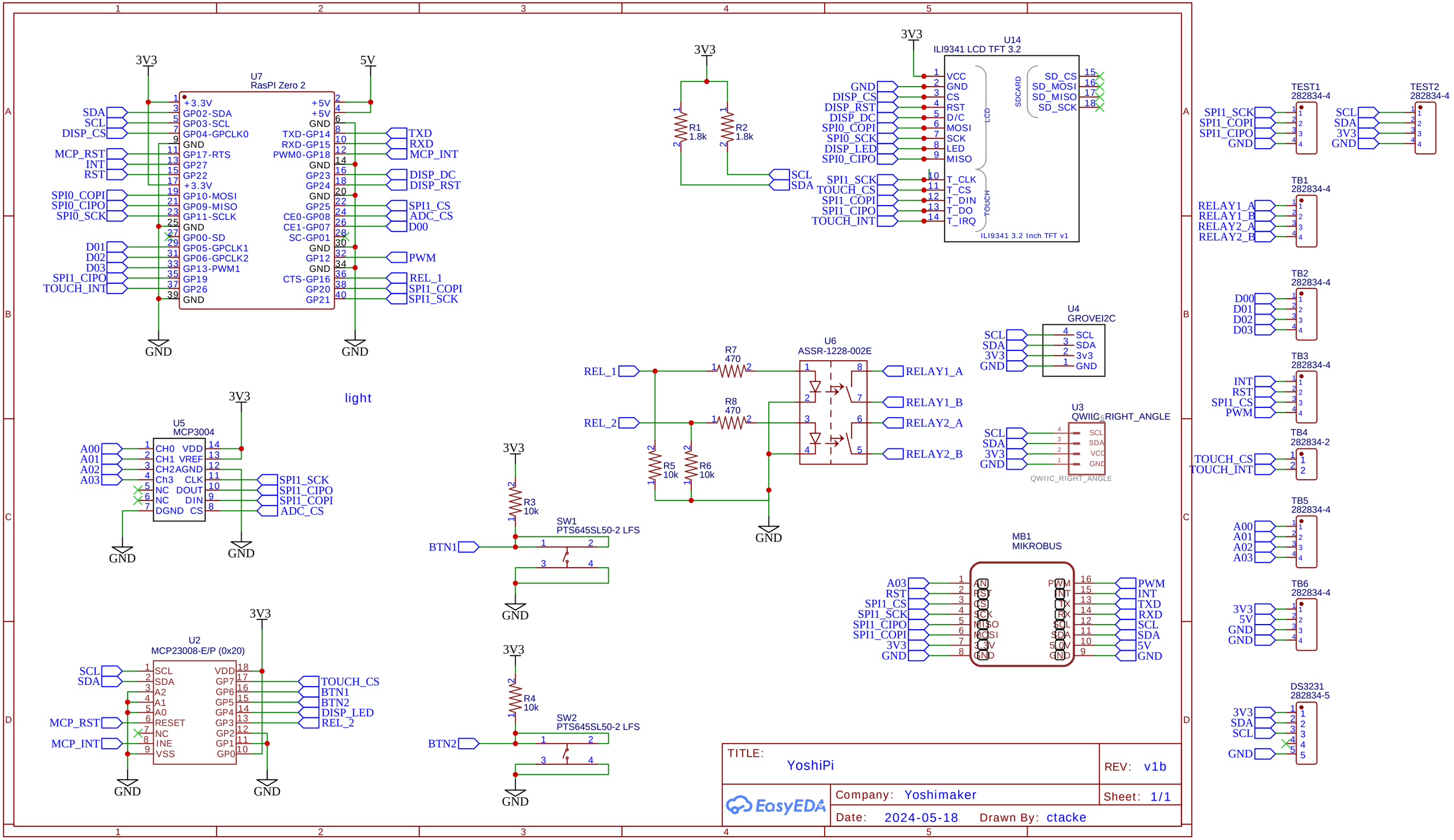
U7
RasPI Zero 2
3V3
5V
GND
SDA
SCL
DISP_CS
MCP_RST
INT
RST
SPI0_COPI
SPI0_CIPO
SPI0_SCK
D01
D02
D03
SPI1_CIPO
TOUCH_INT
TXD
RXD
MCP_INT
DISP_DC
DISP_RST
SPI1_CS
ADC_CS
D00
PWM
REL_1
SPI1_COPI
SPI1_SCK
U14
ILI9341 LCD TFT 3.2
ILI9341 3.2 Inch TFT v1
LCD
SDCARD
TOUCH
SD_CS
SD_MOSI
SD_MISO
SD_SCK
T_CLK
T_CS
T_DIN
T_DO
T_IRQ
R1
1.8k
R2
1.8k
U4
GROVEI2C
U3
QWIIC_RIGHT_ANGLE
U6
ASSR-1228-002E
R7
470
R8
470
R5
10k
R6
10k
RELAY1_A
RELAY1_B
RELAY2_A
RELAY2_B
U5
MCP3004
A00
A01
A02
A03
CH0 VDD
CH1 VREF
CH2 AGND
Ch3 CLK
NC DOUT
NC DIN
DGND CS
light
R3
10k
SW1
PTS645SL50-2 LFS
BTN1
R4
10k
SW2
PTS645SL50-2 LFS
BTN2
U2
MCP23008-E/P (0x20)
TOUCH_CS
DISP_LED
MB1
MIKROBUS
TEST1
282834-4
TEST2
282834-4
TB1
282834-4
TB2
282834-4
TB3
282834-4
TB4
282834-2
TB5
282834-4
TB6
282834-4
DS3231
282834-5
TITLE:
YoshiPi
REV: v1b
Company: Yoshimaker
Sheet: 1/1
Date: 2024-05-18
Drawn By: ctacke
EasyEDA