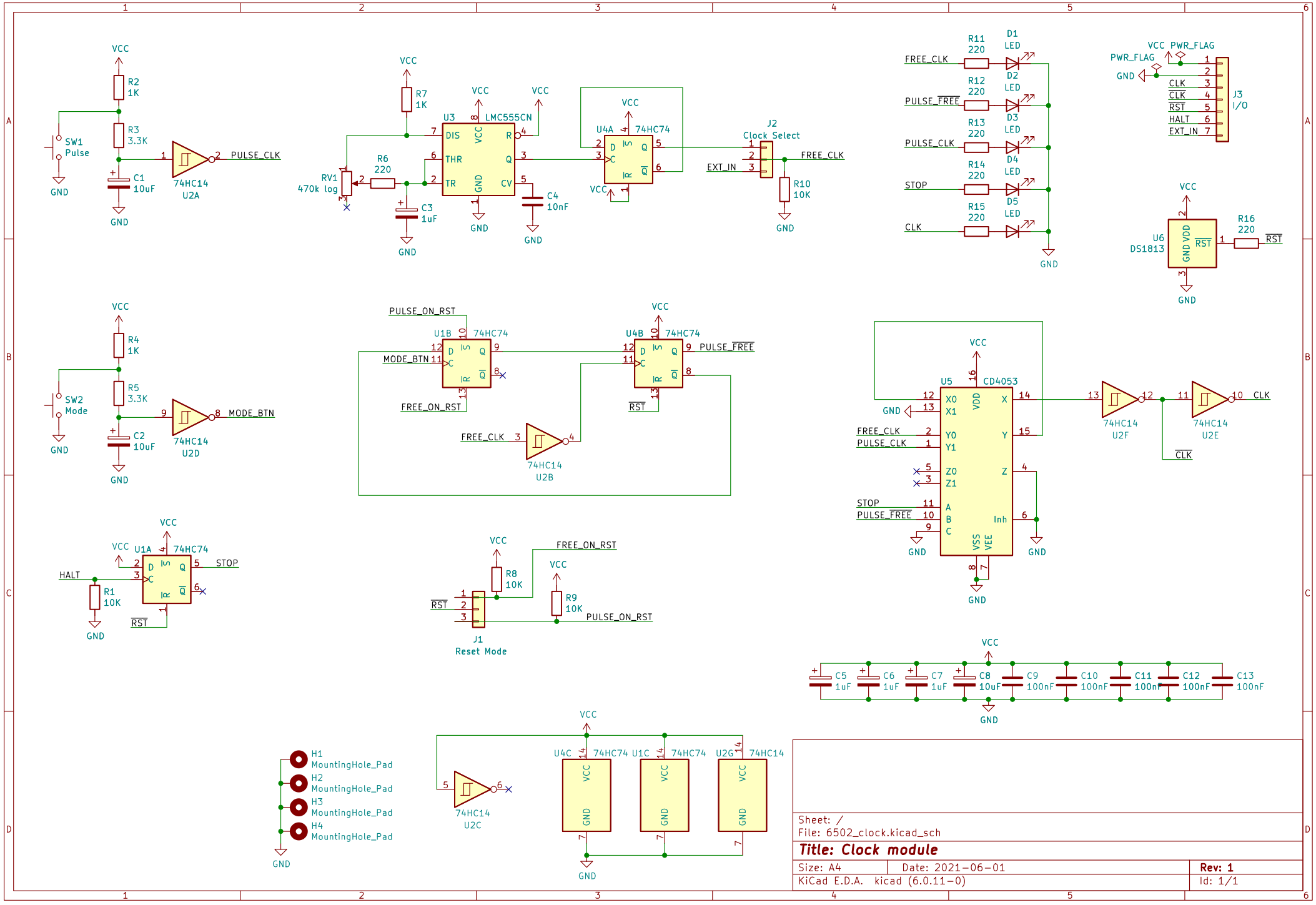

Sheet: /
File: 6502_clock.kicad_sch

Title: Clock module

Size: A4	Date: 2021-06-01	Rev: 1
KiCad E.D.A. kicad (6.0.11-0)		Id: 1/1