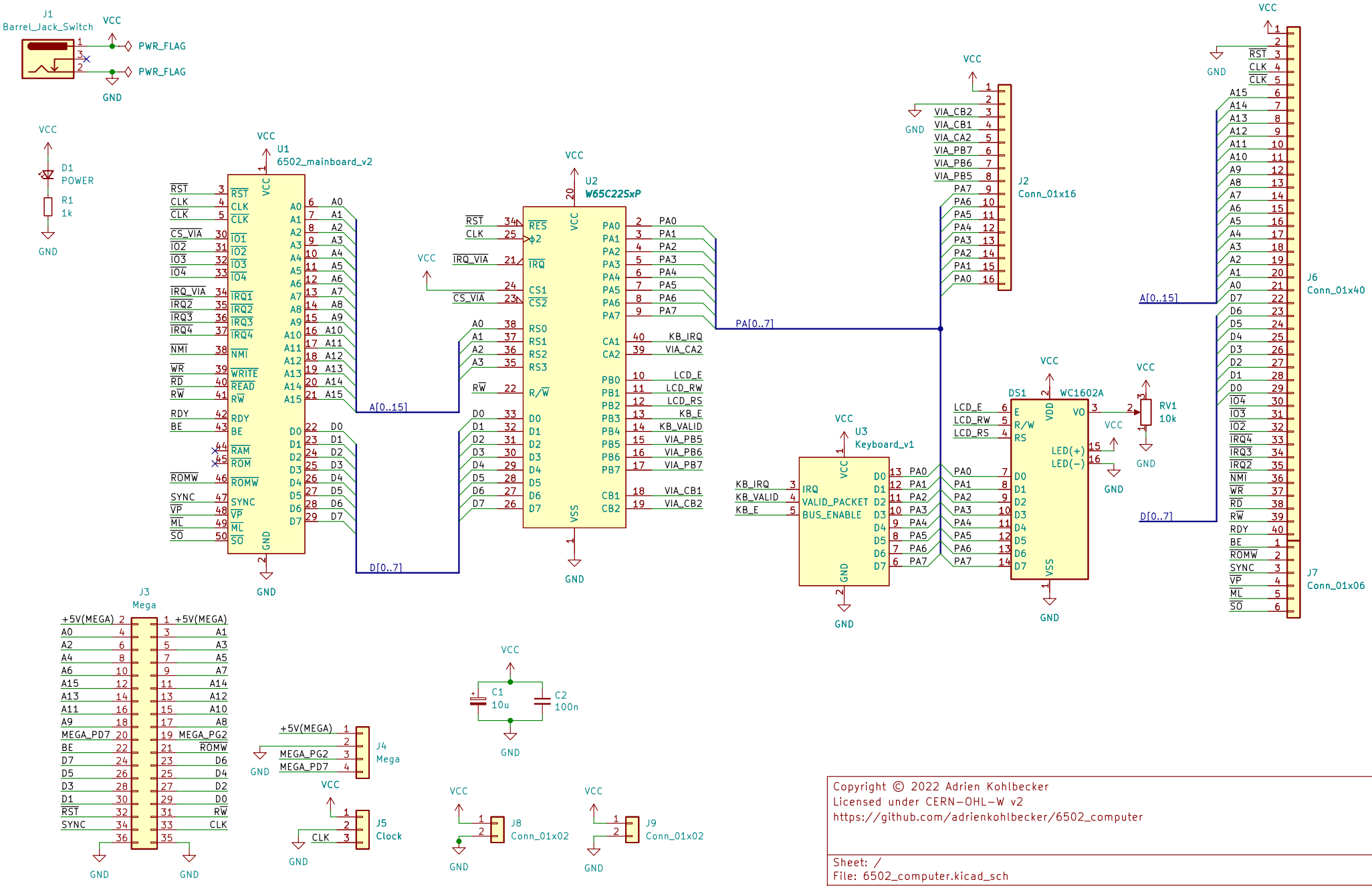

Copyright © 2022 Adrien Kohlbecker
Licensed under CERN-OHL-W v2
https://github.com/adrienkohlbecker/6502_computer

Sheet: /
File: 6502_computer.kicad_sch

Title: 6502 computer

Size: A4	Date: 2023-02-20	Rev: 1
KiCad E.D.A. kicad (6.0.11-0)		Id: 1/1