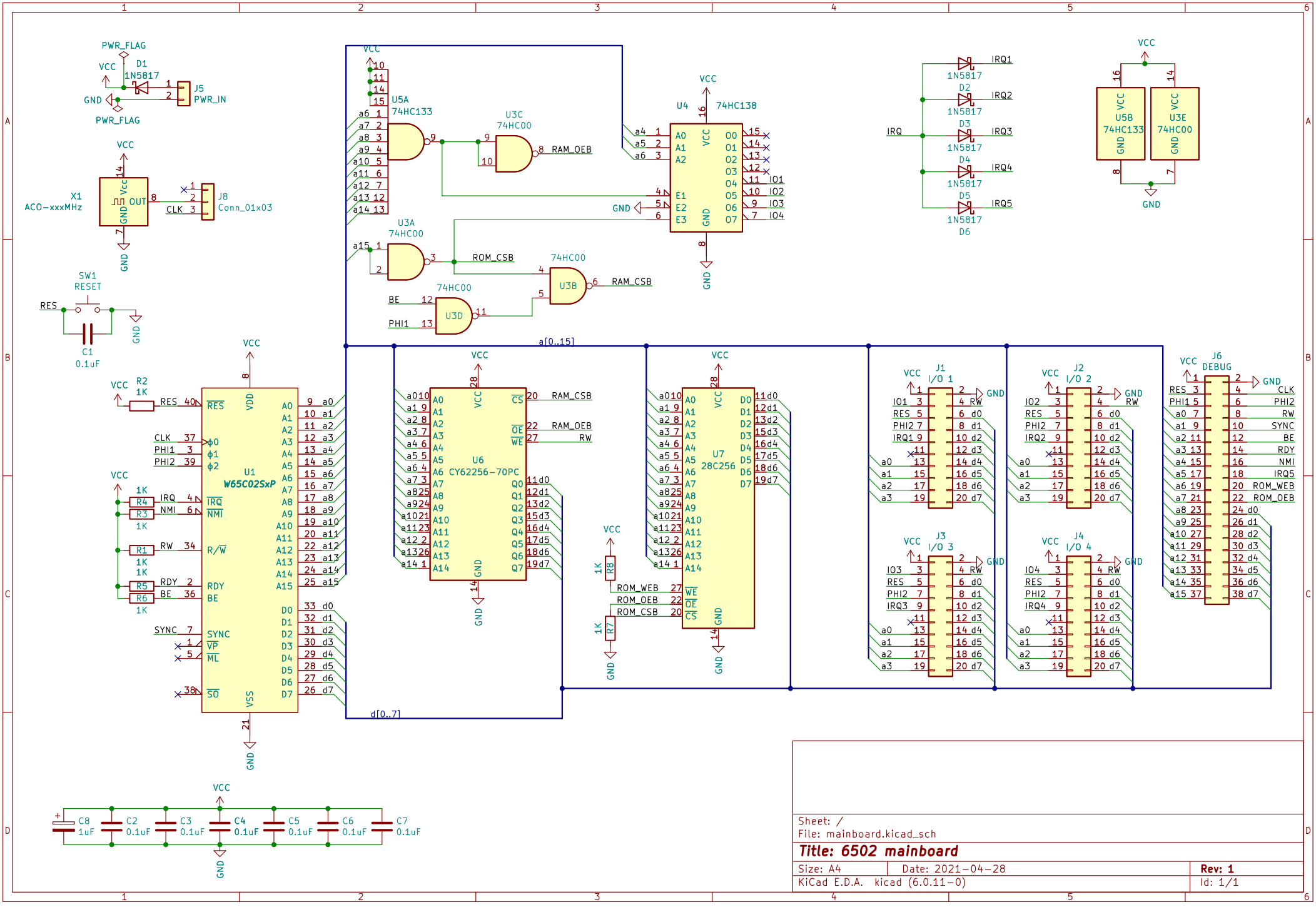

Sheet: /
File: mainboard.kicad_sch

Title: 6502 mainboard

Size: A4	Date: 2021-04-28	Rev: 1
KiCad E.D.A. kicad (6.0.11-0)		Id: 1/1