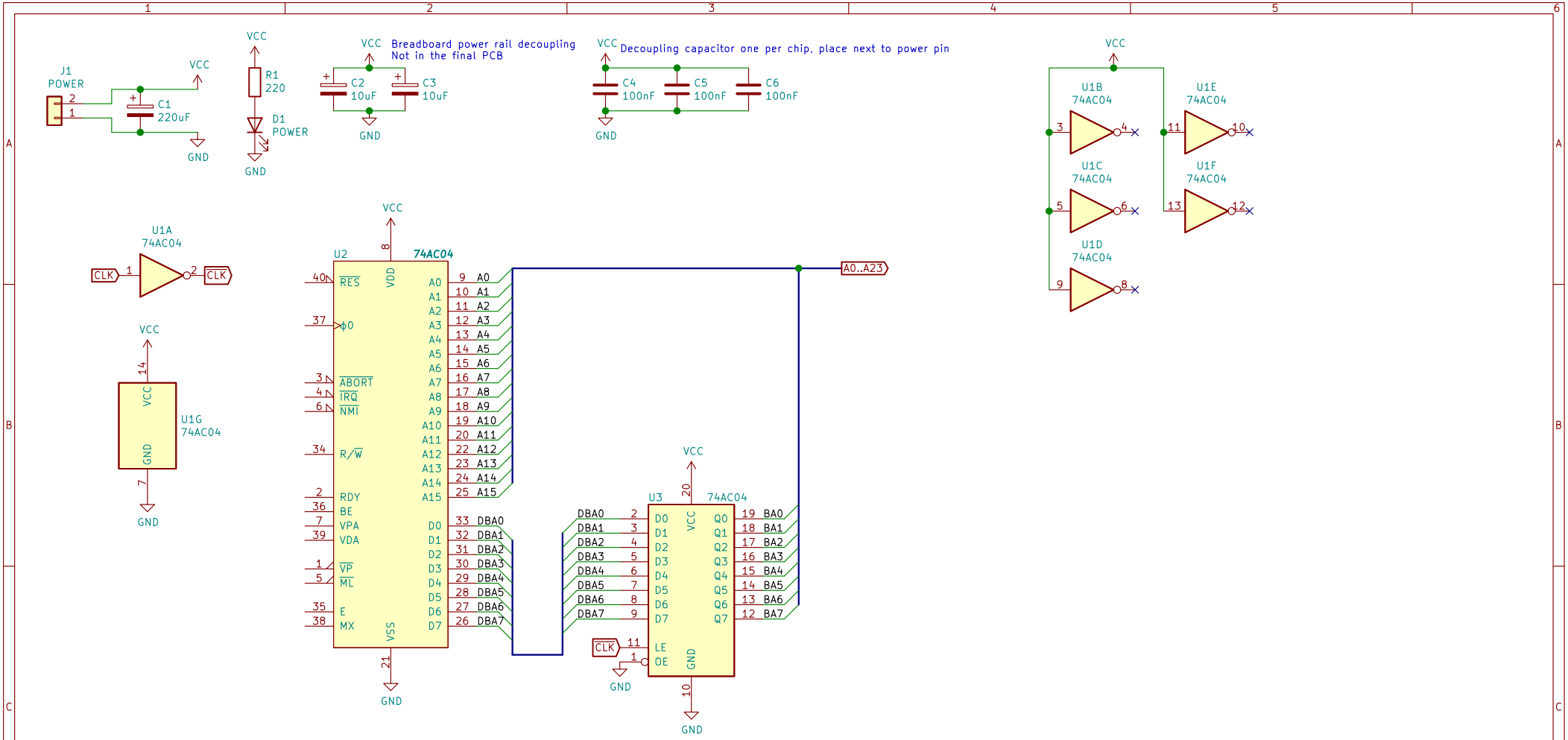

Copyright © 2021 Adrien Kohlbecker
Licensed under CERN-OHL-W v2
https://github.com/adrienkohlbecker/65816

Sheet: /
File: 65816.sch

Title: 65816 Homebrew Computer

Size: A4	Date: 2021-07-20	Rev: A
KiCad E.D.A. kicad (5.1.9-0-10_14)		Id: 1/1