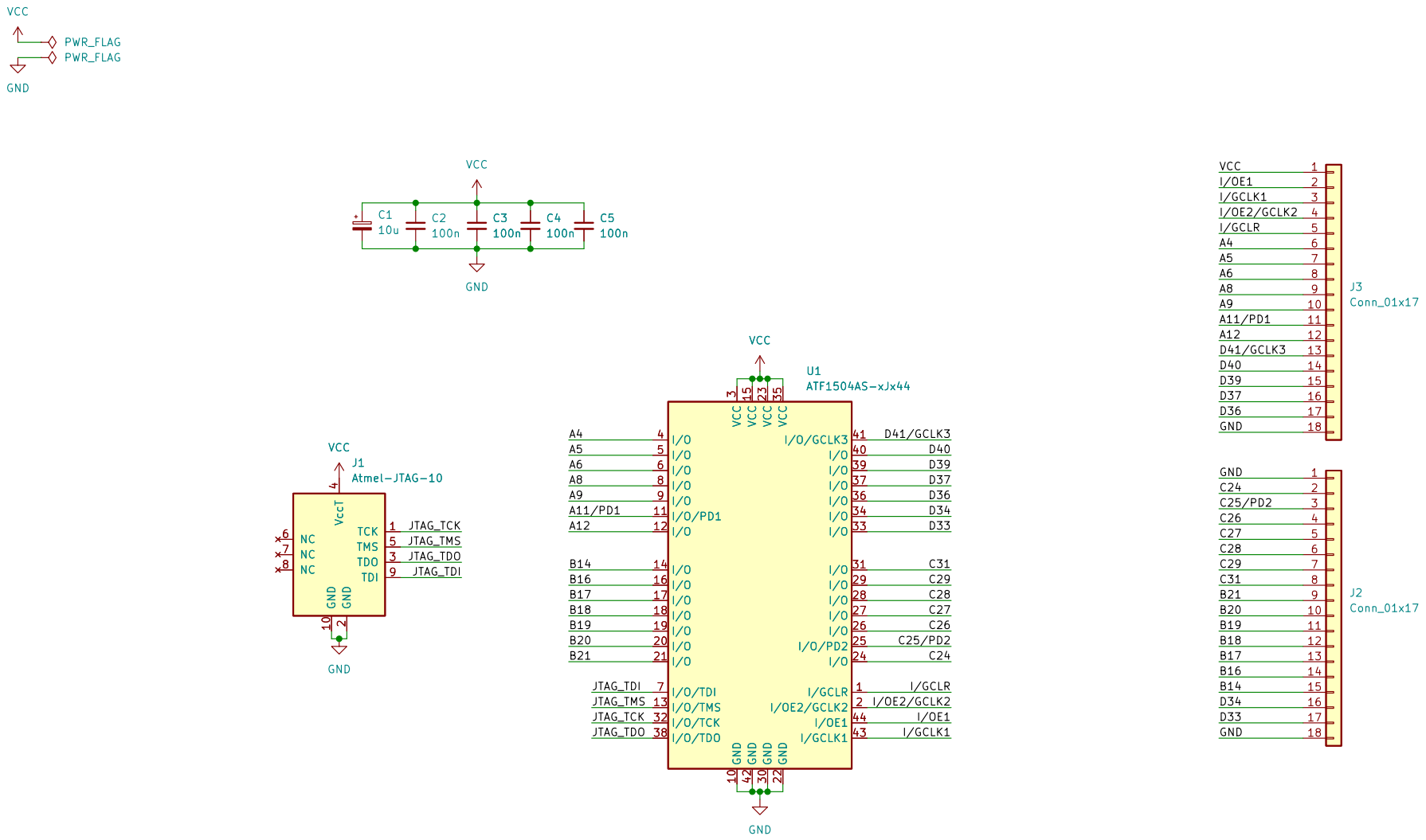

Copyright © Adrien Kohlbecker
Licensed under CERN-OHL-W v2
https://github.com/adrienkohlbecker/atf1504_plcc44_breakout

Sheet: /
File: atf1504_plcc44_breakout.kicad_sch

Title: ATF1504 PLCC44 Breakout

Size: A4	Date: 2023-06-17	Rev: A
KiCad E.D.A. kicad (6.0.11-0)		Id: 1/1