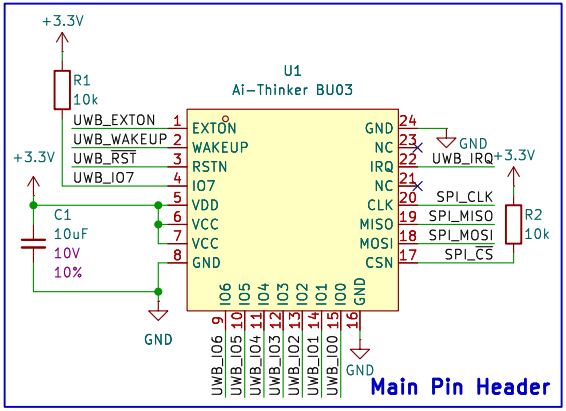

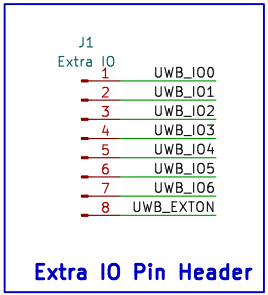

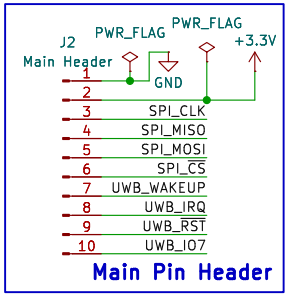

© CC BY-SA 4.0

Designed by Adrien Lesage

Sheet: /

File: UWB.kicad_sch

Title: Breakout Board for Ai-Thinker BU03

Size: A5	Date: 2025-09-18	**Rev: v1.0**
KiCad E.D.A. 9.0.3		Id: 1/1