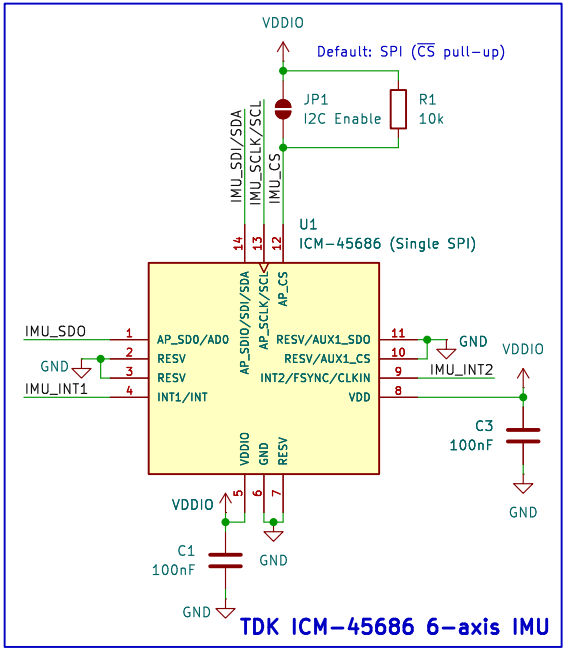

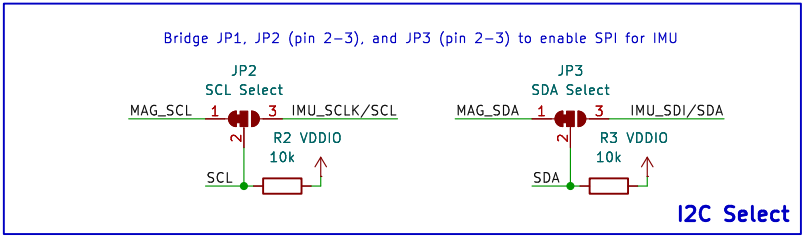

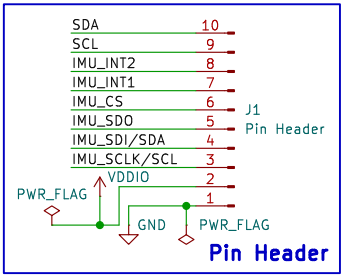

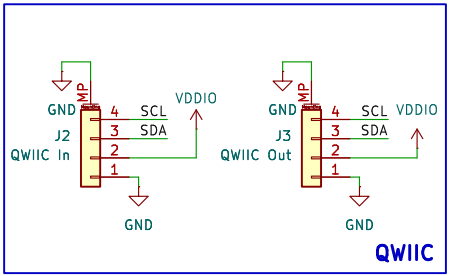

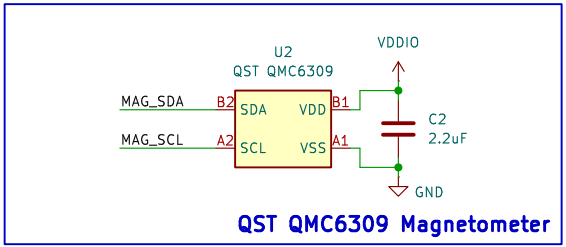

© CC BY-SA 4.0

Designed by Adrien Lesage

Sheet: /

File: IMU-Magnetometer.kicad_sch

Title: Breakout Board for ICM-45686 IMU and QMC6309 Mag

Size: A5	Date: 2025-09-06	**Rev: v1.0**
KiCad E.D.A. 9.0.3		Id: 1/1