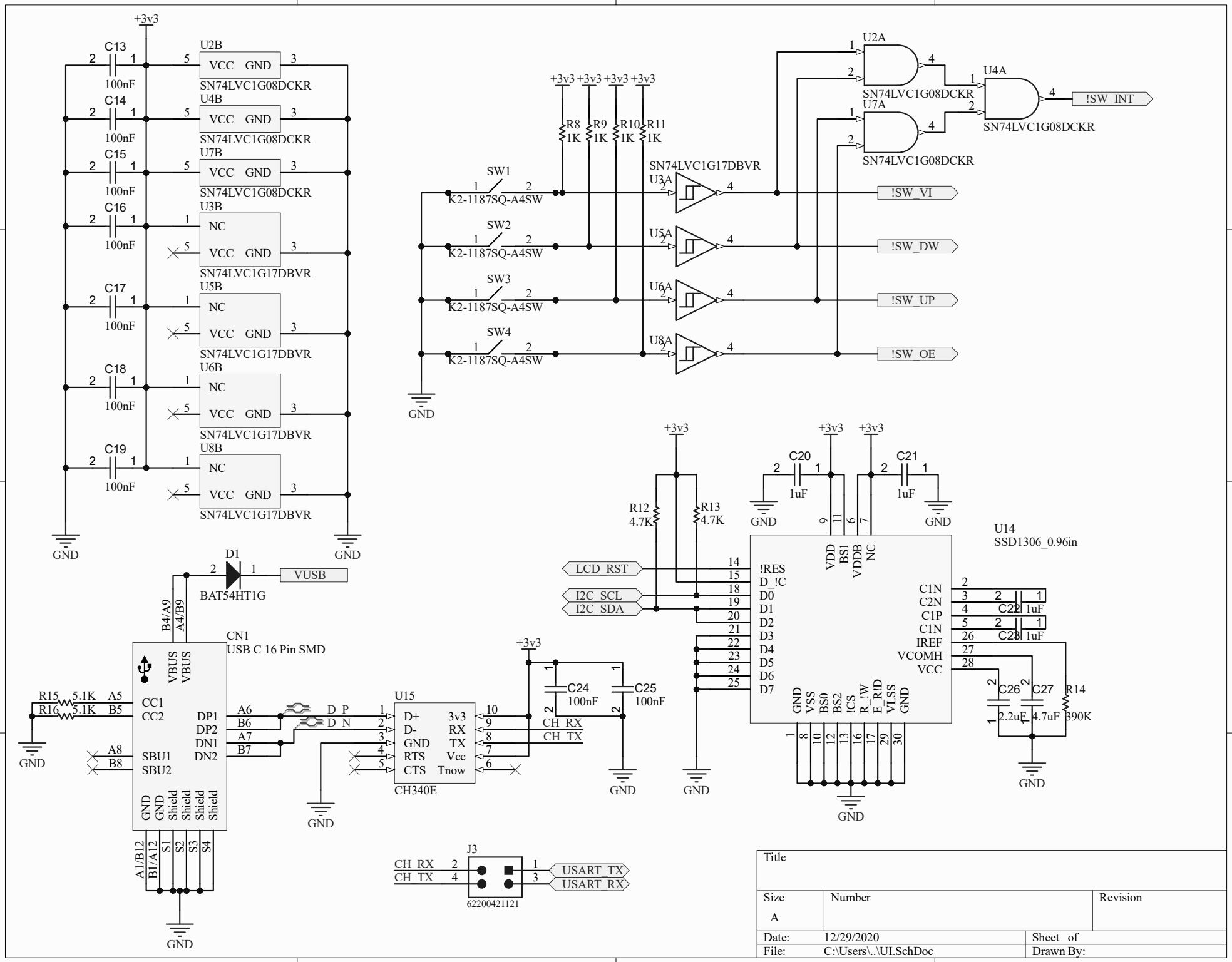
+3v3
C13
100nF
C14
100nF
C15
100nF
C16
100nF
C17
100nF
C18
100nF
C19
100nF
U2B
U4B
U7B
U3B
U5B
U6B
U8B
VCC GND
NC
SN74LVC1G08DCKR
SN74LVC1G17DBVR
GND
SW1
SW2
SW3
SW4
K2-1187SQ-A4SW
R8 1K
R9 1K
R10 1K
R11 1K
U3A
U5A
U6A
U8A
U2A
U7A
U4A
!SW_INT
!SW_VI
!SW_DW
!SW_UP
!SW_OE
D1
BAT54HT1G
VUSB
CN1
USB C 16 Pin SMD
VBUS
CC1
CC2
DP1
DP2
DN1
DN2
SBU1
SBU2
GND
Shield
R15 5.1K
R16 5.1K
A5
B5
A6
B6
A7
B7
A8
B8
B4/A9
A4/B9
A1/B12
B1/A12
S1
S2
S3
S4
D_P
D_N
U15
CH340E
D+
D-
RTS
CTS
3v3
RX
TX
Vcc
Tnow
C24 100nF
C25 100nF
CH_RX
CH_TX
J3
62200421121
USART_TX
USART_RX
R12 4.7K
R13 4.7K
LCD_RST
I2C_SCL
I2C_SDA
C20 1uF
C21 1uF
U14
SSD1306_0.96in
!RES
D_!C
D0
D1
D2
D3
D4
D5
D6
D7
VDD
BS1
VDDB
NC
C1N
C2N
C1P
IREF
VCOMH
VCC
VSS
BS0
BS2
!CS
R_!W
E_RD
VLSS
C22 1uF
C23 1uF
C26 2.2uF
C27 4.7uF
R14 390K
Title
Size
A
Number
Revision
Date: 12/29/2020
Sheet of
File: C:\Users\..\UI.SchDoc
Drawn By: