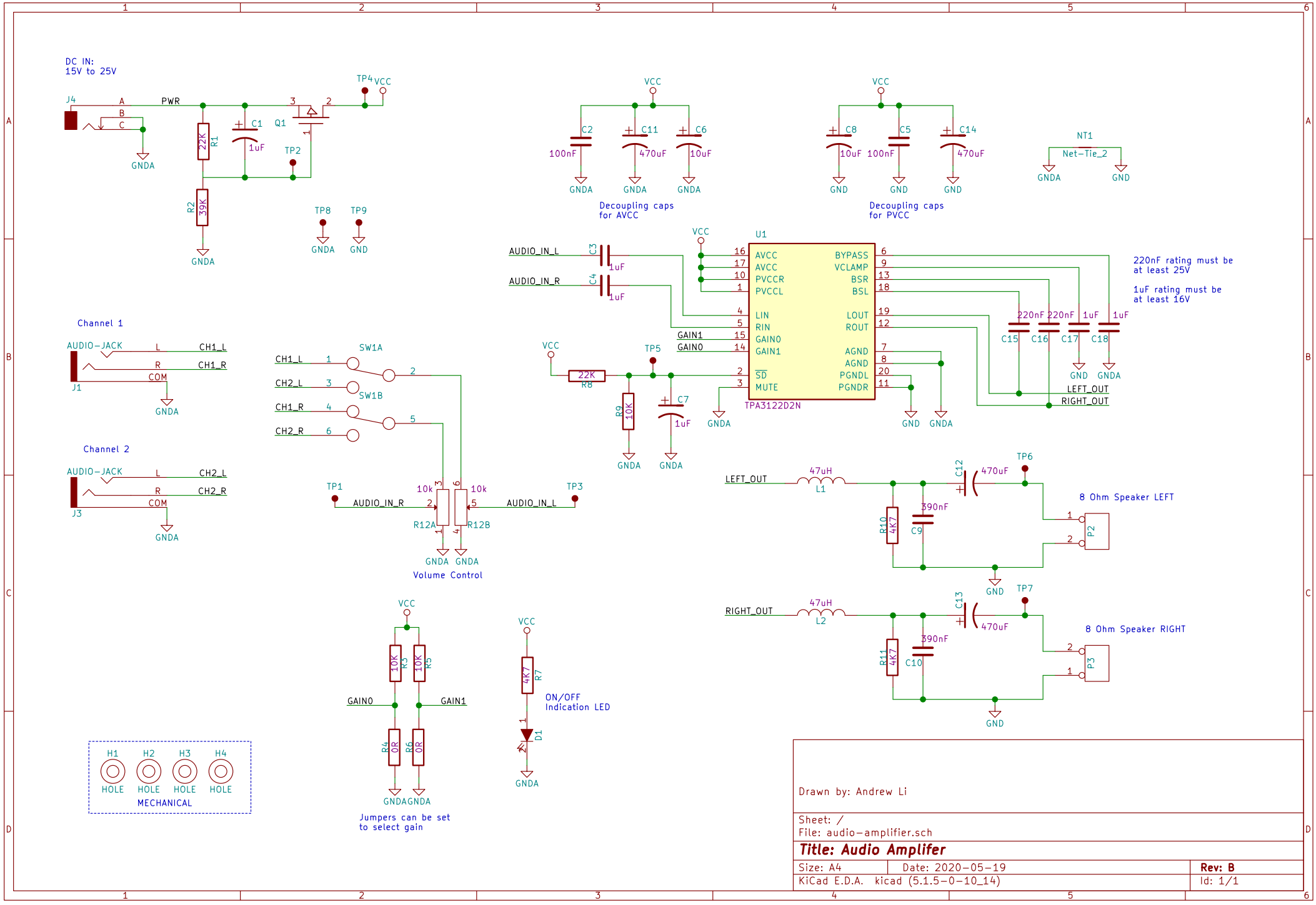

Drawn by: Andrew Li

Sheet: /
File: audio-amplifier.sch

Title: Audio Amplifer

Size: A4	Date: 2020-05-19	Rev: B
KiCad E.D.A. kicad (5.1.5-0-10_14)		Id: 1/1