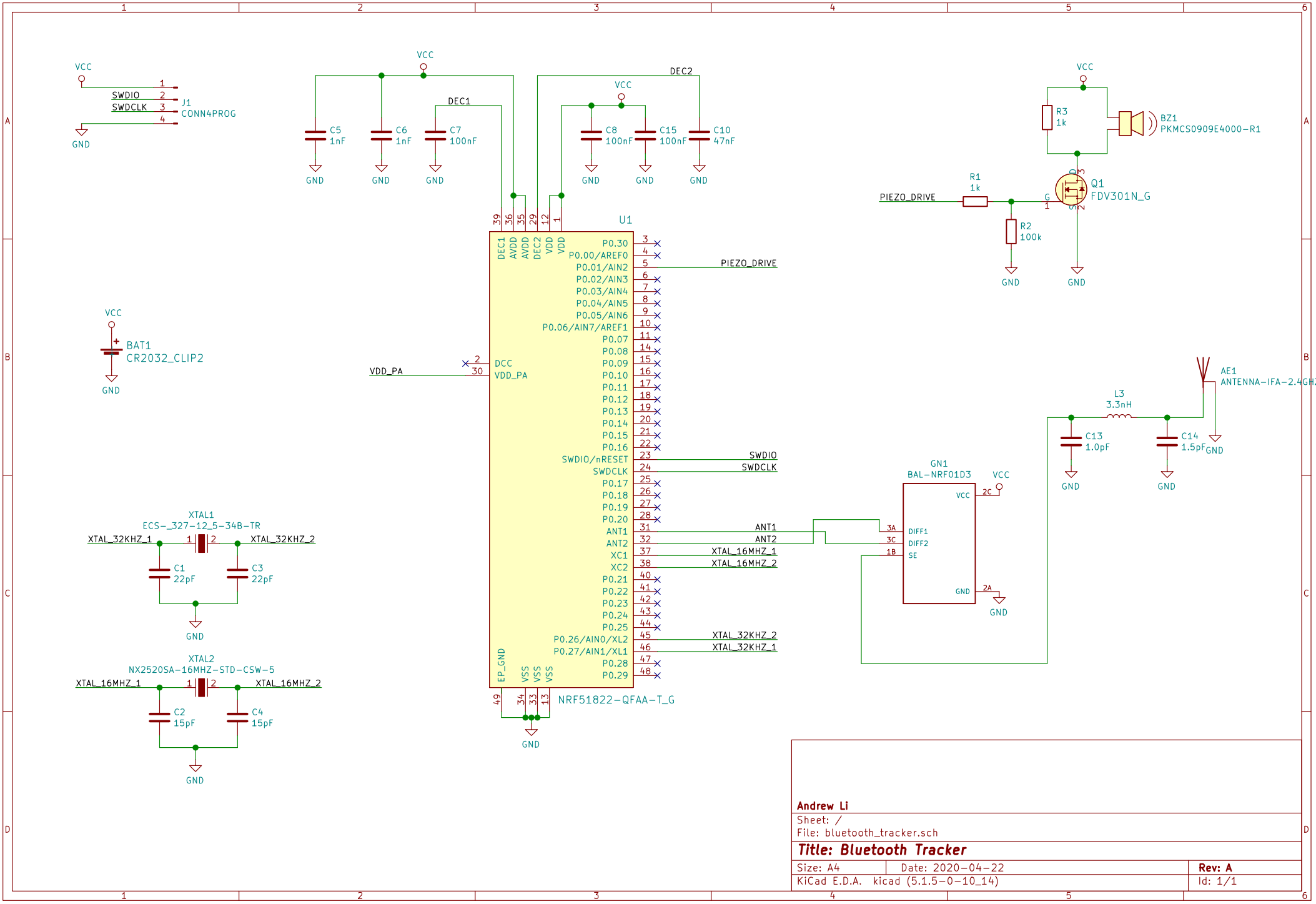

Andrew Li

Sheet: /

File: bluetooth_tracker.sch

Title: Bluetooth Tracker

Size: A4	Date: 2020-04-22	**Rev: A**
KiCad E.D.A. kicad (5.1.5-0-10_14)		Id: 1/1