Homework 2 — Solutions

CE 512 Finite Element Method

2026 Spring

Muhammet Yağcıoğlu

Student No: 290204042

March 4, 2026

İzmir Institute of Technology
Department of Civil Engineering

Contents

1 Problem Statement **2**

2 Element Connectivity and DOFs **2**

3 Element Geometry **3**

4 Part (a): Global Stiffness Matrix **3**

5 Part (b): Nodal Displacements **4**

6 Part (c): Element Strains **5**

7 Part (d): First Yield **6**

8 Part (e): First Buckling **6**

9 Deformed Shape **7**

10 OpenSees Validation **7**

11 Discussion **8**

11.1 Demand vs. Capacity 8

11.2 Role of Each Element 8

11.3 Design Deficiencies and Recommendations 9

11.4 Demand/Capacity Summary 9

12 Conclusion **9**

1 Problem Statement

The four-element plane truss in Figure 1 has $E = 20\,000$ MPa, $A = 400$ mm^2, and $\sigma_y = 300$ MPa. Nodes 1 and 2 are pinned; force P acts downward at node 4.

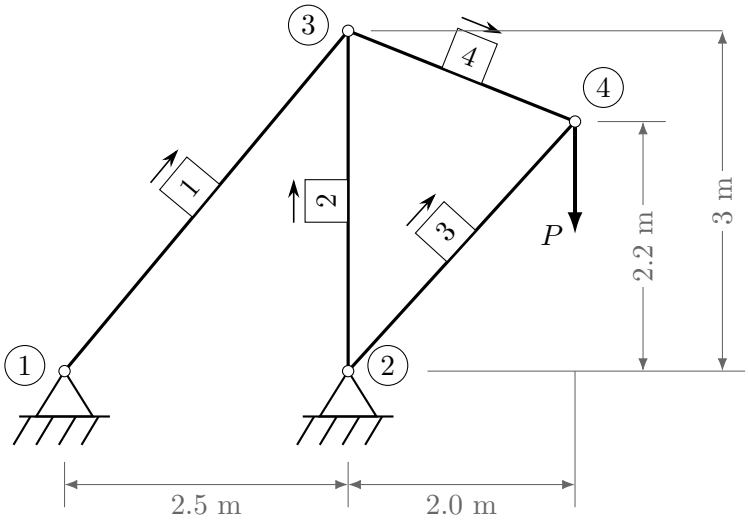

Figure 1: Four-element truss structure.

Required: (a) Global stiffness matrix. (b) Nodal displacements. (c) Element strains. (d) P at first yield. (e) P at first buckling.

2 Element Connectivity and DOFs

Each node carries DOFs (u_n, v_n); the global DOF vector is $\mathbf{d} = \{u_1, v_1, u_2, v_2, u_3, v_3, u_4, v_4\}^T$.

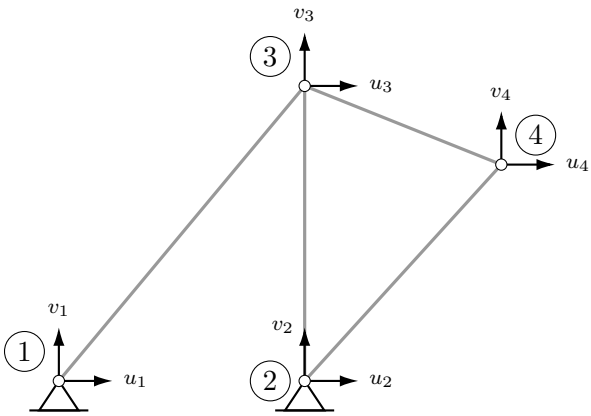

Figure 2: Global DOFs.

Element connectivity and DOF mapping:

e	i	j	Global DOFs: $(u_i,\ v_i,\ u_j,\ v_j)$
1	1	3	$(u_1,\ v_1,\ u_3,\ v_3)$
2	2	3	$(u_2,\ v_2,\ u_3,\ v_3)$
3	2	4	$(u_2,\ v_2,\ u_4,\ v_4)$
4	3	4	$(u_3,\ v_3,\ u_4,\ v_4)$

3 Element Geometry

For element e from node $i\,(x_i, y_i)$ to node $j\,(x_j, y_j)$:

$$L_e = \sqrt{(\Delta x_e)^2 + (\Delta y_e)^2}, \qquad c_e = \frac{\Delta x_e}{L_e}, \qquad s_e = \frac{\Delta y_e}{L_e}.$$

e	Δx_e	Δy_e	L_e (mm)	c_e	s_e	c_e^2	s_e^2	$c_e s_e$	EA/L_e
1	2500	3000	$500\sqrt{61} \approx 3905$	$\frac{5}{\sqrt{61}}$	$\frac{6}{\sqrt{61}}$	$\frac{25}{61}$	$\frac{36}{61}$	$\frac{30}{61}$	2048.59
2	0	3000	3000	0	1	0	1	0	2666.67
3	2000	2200	$200\sqrt{221} \approx 2973$	$\frac{10}{\sqrt{221}}$	$\frac{11}{\sqrt{221}}$	$\frac{100}{221}$	$\frac{121}{221}$	$\frac{110}{221}$	2690.69
4	2000	-800	$400\sqrt{29} \approx 2154$	$\frac{5}{\sqrt{29}}$	$\frac{-2}{\sqrt{29}}$	$\frac{25}{29}$	$\frac{4}{29}$	$\frac{-10}{29}$	3713.91

All Δx, Δy in mm; EA/L_e in N/mm.

4 Part (a): Global Stiffness Matrix

The local stiffness matrix for a truss element is

$$\mathbf{k}_{\text{local}}^{(e)} = \frac{EA}{L_e}\begin{bmatrix} 1 & -1 \\ -1 & 1 \end{bmatrix}. \tag{1}$$

The transformation matrix $\mathbf{T}_e$ relating local DOFs $\{u_i', u_j'\}^T$ to global DOFs $\{u_i, v_i, u_j, v_j\}^T$:

$$\mathbf{T}_e = \begin{bmatrix} c_e & s_e & 0 & 0 \\ 0 & 0 & c_e & s_e \end{bmatrix}. \tag{2}$$

The element stiffness in global coordinates $\mathbf{K}^{(e)} = \mathbf{T}_e^T\,\mathbf{k}_{\text{local}}^{(e)}\,\mathbf{T}_e$ gives

$$\mathbf{K}^{(e)} = \frac{EA}{L_e}\begin{bmatrix} c_e^2 & c_e s_e & -c_e^2 & -c_e s_e \\ c_e s_e & s_e^2 & -c_e s_e & -s_e^2 \\ -c_e^2 & -c_e s_e & c_e^2 & c_e s_e \\ -c_e s_e & -s_e^2 & c_e s_e & s_e^2 \end{bmatrix}. \tag{3}$$

Element 1 ($1 \to 3$, DOFs: u_1, v_1, u_3, v_3):

$$\mathbf{K}^{(1)} = \frac{EA}{L_1}\begin{bmatrix} c_1^2 & c_1 s_1 & -c_1^2 & -c_1 s_1 \\ c_1 s_1 & s_1^2 & -c_1 s_1 & -s_1^2 \\ -c_1^2 & -c_1 s_1 & c_1^2 & c_1 s_1 \\ -c_1 s_1 & -s_1^2 & c_1 s_1 & s_1^2 \end{bmatrix} = \begin{bmatrix} 839.59 & 1007.50 & -839.59 & -1007.50 \\ 1007.50 & 1209.00 & -1007.50 & -1209.00 \\ -839.59 & -1007.50 & 839.59 & 1007.50 \\ -1007.50 & -1209.00 & 1007.50 & 1209.00 \end{bmatrix} \text{ N/mm}$$

Element 2 ($2 \to 3$, DOFs: u_2, v_2, u_3, v_3), $c_2 = 0$, $s_2 = 1$:

$$\mathbf{K}^{(2)} = \frac{8000}{3}\begin{bmatrix} 0 & 0 & 0 & 0 \\ 0 & 1 & 0 & -1 \\ 0 & 0 & 0 & 0 \\ 0 & -1 & 0 & 1 \end{bmatrix} = \begin{bmatrix} 0 & 0 & 0 & 0 \\ 0 & 2666.67 & 0 & -2666.67 \\ 0 & 0 & 0 & 0 \\ 0 & -2666.67 & 0 & 2666.67 \end{bmatrix} \text{ N/mm}$$

Element 3 ($2 \to 4$, DOFs: u_2, v_2, u_4, v_4):

$$\mathbf{K}^{(3)} = \frac{EA}{L_3}\begin{bmatrix} c_3^2 & c_3 s_3 & -c_3^2 & -c_3 s_3 \\ c_3 s_3 & s_3^2 & -c_3 s_3 & -s_3^2 \\ -c_3^2 & -c_3 s_3 & c_3^2 & c_3 s_3 \\ -c_3 s_3 & -s_3^2 & c_3 s_3 & s_3^2 \end{bmatrix} = \begin{bmatrix} 1217.51 & 1339.26 & -1217.51 & -1339.26 \\ 1339.26 & 1473.18 & -1339.26 & -1473.18 \\ -1217.51 & -1339.26 & 1217.51 & 1339.26 \\ -1339.26 & -1473.18 & 1339.26 & 1473.18 \end{bmatrix} \text{ N/mm}$$

Element 4 ($3 \to 4$, DOFs: u_3, v_3, u_4, v_4):

$$\mathbf{K}^{(4)} = \frac{EA}{L_4}\begin{bmatrix} c_4^2 & c_4 s_4 & -c_4^2 & -c_4 s_4 \\ c_4 s_4 & s_4^2 & -c_4 s_4 & -s_4^2 \\ -c_4^2 & -c_4 s_4 & c_4^2 & c_4 s_4 \\ -c_4 s_4 & -s_4^2 & c_4 s_4 & s_4^2 \end{bmatrix} = \begin{bmatrix} 3201.64 & -1280.66 & -3201.64 & 1280.66 \\ -1280.66 & 512.26 & 1280.66 & -512.26 \\ -3201.64 & 1280.66 & 3201.64 & -1280.66 \\ 1280.66 & -512.26 & -1280.66 & 1280.66 \end{bmatrix} \text{ N/mm}$$

Assembling $\mathbf{K} = \sum_{e=1}^{4} \mathbf{A}_e^T \mathbf{K}^{(e)} \mathbf{A}_e$ by the direct stiffness method. The assembled global stiffness matrix is:

$$\mathbf{K} = \begin{array}{c} \begin{array}{cccccccc} u_1 & v_1 & u_2 & v_2 & u_3 & v_3 & u_4 & v_4 \end{array} \\ \begin{bmatrix} 839.59 & 1007.50 & 0 & 0 & -839.59 & -1007.50 & 0 & 0 \\ 1007.50 & 1209.00 & 0 & 0 & -1007.50 & -1209.00 & 0 & 0 \\ 0 & 0 & 1217.51 & 1339.26 & 0 & 0 & -1217.51 & -1339.26 \\ 0 & 0 & 1339.26 & 4139.85 & 0 & -2666.67 & -1339.26 & -1473.18 \\ -839.59 & -1007.50 & 0 & 0 & 4041.23 & -273.15 & -3201.64 & 1280.66 \\ -1007.50 & -1209.00 & 0 & -2666.67 & -273.15 & 4387.93 & 1280.66 & -512.26 \\ 0 & 0 & -1217.51 & -1339.26 & -3201.64 & 1280.66 & 4419.15 & 58.60 \\ 0 & 0 & -1339.26 & -1473.18 & 1280.66 & -512.26 & 58.60 & 1985.45 \end{bmatrix} \end{array} \text{ N/mm} \tag{4}$$

5 Part (b): Nodal Displacements

Boundary conditions (pinned at nodes $1, 2$): $u_1 = v_1 = u_2 = v_2 = 0$. Partitioning into free (f) and restrained (r) sets:

$$\begin{Bmatrix} \mathbf{F}_f \\ \mathbf{F}_r \end{Bmatrix} = \begin{bmatrix} \mathbf{K}_{ff} & \mathbf{K}_{fr} \\ \mathbf{K}_{rf} & \mathbf{K}_{rr} \end{bmatrix} \begin{Bmatrix} \mathbf{d}_f \\ \mathbf{0} \end{Bmatrix} \quad \Longrightarrow \quad \mathbf{K}_{ff}\,\mathbf{d}_f = \mathbf{F}_f \tag{5}$$

with $\mathbf{d}_f = \{u_3,\, v_3,\, u_4,\, v_4\}^T$ and $\mathbf{F}_f = \{0,\, 0,\, 0,\, -P\}^T$. The reduced system is

$$\begin{bmatrix} 4041.23 & -273.15 & -3201.64 & 1280.66 \\ -273.15 & 4387.93 & 1280.66 & -512.26 \\ -3201.64 & 1280.66 & 4419.15 & 58.60 \\ 1280.66 & -512.26 & 58.60 & 1985.45 \end{bmatrix} \begin{Bmatrix} u_3 \\ v_3 \\ u_4 \\ v_4 \end{Bmatrix} \text{ mm} = \begin{Bmatrix} 0 \\ 0 \\ 0 \\ -P \end{Bmatrix} \text{ N}$$

Inverting $\mathbf{K}_{ff}$:

$$\mathbf{K}_{ff}^{-1} = 10^{-4} \times \begin{bmatrix} 17.3106 & -4.5000 & 14.0145 & -12.7404 \\ -4.5000 & 3.7500 & -4.4000 & 4.0000 \\ 14.0145 & -4.4000 & 13.8317 & -10.5831 \\ -12.7404 & 4.0000 & -10.5831 & 14.5989 \end{bmatrix} \text{ mm/N}$$

$$\mathbf{d}_f = \mathbf{K}_{ff}^{-1}\mathbf{F}_f = P\,\mathbf{K}_{ff}^{-1} \begin{Bmatrix} 0 \\ 0 \\ 0 \\ -1 \end{Bmatrix}$$

$$\boxed{\begin{Bmatrix} u_3 \\ v_3 \\ u_4 \\ v_4 \end{Bmatrix} = P \times \begin{Bmatrix} +1.2740 \times 10^{-3} \\ -4.0000 \times 10^{-4} \\ +1.0583 \times 10^{-3} \\ -1.4599 \times 10^{-3} \end{Bmatrix} \text{ mm}} \tag{6}$$

Support reactions. $\mathbf{F}_r = \mathbf{K}_{rf}\,\mathbf{d}_f$:

$$\begin{Bmatrix} R_{x1} \\ R_{y1} \\ R_{x2} \\ R_{y2} \end{Bmatrix} = P \times \begin{Bmatrix} -2/3 \\ -4/5 \\ +2/3 \\ +9/5 \end{Bmatrix} \text{ N} \tag{7}$$

Equilibrium check:

$$\sum F_x = \left(-\tfrac{2}{3} + \tfrac{2}{3}\right)P = 0 \;\Rightarrow\; \text{satisfied}, \qquad \sum F_y = \left(-\tfrac{4}{5} + \tfrac{9}{5} - 1\right)P = 0 \;\Rightarrow\; \text{satisfied}$$

$$\sum M_1 = \tfrac{9}{5}P \times 2500 - P \times 4500 = (4500 - 4500)P = 0 \;\Rightarrow\; \text{satisfied}$$

6 Part (c): Element Strains

The axial strain in element e is

$$\varepsilon_e = \frac{1}{L_e}\begin{bmatrix} -c_e & -s_e & c_e & s_e \end{bmatrix} \begin{Bmatrix} u_i \\ v_i \\ u_j \\ v_j \end{Bmatrix}, \qquad \sigma_e = E\,\varepsilon_e, \qquad N_e = \sigma_e A. \tag{8}$$

Since $u_1 = v_1 = u_2 = v_2 = 0$, each element strain depends only on the free DOFs. Collecting all four strains into a single matrix operation:

$$\begin{Bmatrix} \varepsilon_1 \\ \varepsilon_2 \\ \varepsilon_3 \\ \varepsilon_4 \end{Bmatrix} = \begin{bmatrix} \frac{c_1}{L_1} & \frac{s_1}{L_1} & 0 & 0 \\ 0 & \frac{s_2}{L_2} & 0 & 0 \\ 0 & 0 & \frac{c_3}{L_3} & \frac{s_3}{L_3} \\ \frac{-c_4}{L_4} & \frac{-s_4}{L_4} & \frac{c_4}{L_4} & \frac{s_4}{L_4} \end{bmatrix} \begin{Bmatrix} u_3 \\ v_3 \\ u_4 \\ v_4 \end{Bmatrix} \tag{9}$$

Substituting the numerical values of c_e, s_e, L_e and the displacement vector from Equation (6):

$$\begin{Bmatrix} \varepsilon_1 \\ \varepsilon_2 \\ \varepsilon_3 \\ \varepsilon_4 \end{Bmatrix} = 10^{-4} \underbrace{\begin{bmatrix} 1.639 & 1.967 & 0 & 0 \\ 0 & 3.333 & 0 & 0 \\ 0 & 0 & 2.263 & 2.489 \\ -4.309 & 1.724 & 4.309 & -1.724 \end{bmatrix}}_{1/\text{mm}} \times P \begin{Bmatrix} 1.2740 \\ -0.4000 \\ 1.0583 \\ -1.4599 \end{Bmatrix} \times 10^{-3} \tag{10}$$

The resulting strains, stresses ($\sigma_e = E\varepsilon_e$), and axial forces ($N_e = A\sigma_e$) are:

$$\boxed{\begin{Bmatrix} \varepsilon_1 \\ \varepsilon_2 \\ \varepsilon_3 \\ \varepsilon_4 \end{Bmatrix} = P \begin{Bmatrix} +1.302 \\ -1.333 \\ -1.239 \\ +0.898 \end{Bmatrix} \times 10^{-7}, \quad \begin{Bmatrix} \sigma_1 \\ \sigma_2 \\ \sigma_3 \\ \sigma_4 \end{Bmatrix} = P \begin{Bmatrix} +2.603 \\ -2.667 \\ -2.478 \\ +1.795 \end{Bmatrix} \times 10^{-3} \text{ MPa}, \quad \begin{Bmatrix} N_1 \\ N_2 \\ N_3 \\ N_4 \end{Bmatrix} = P \begin{Bmatrix} +1.041 \\ -1.067 \\ -0.991 \\ +0.718 \end{Bmatrix} \text{ N}} \tag{11}$$

($+$ = tension, $-$ = compression)

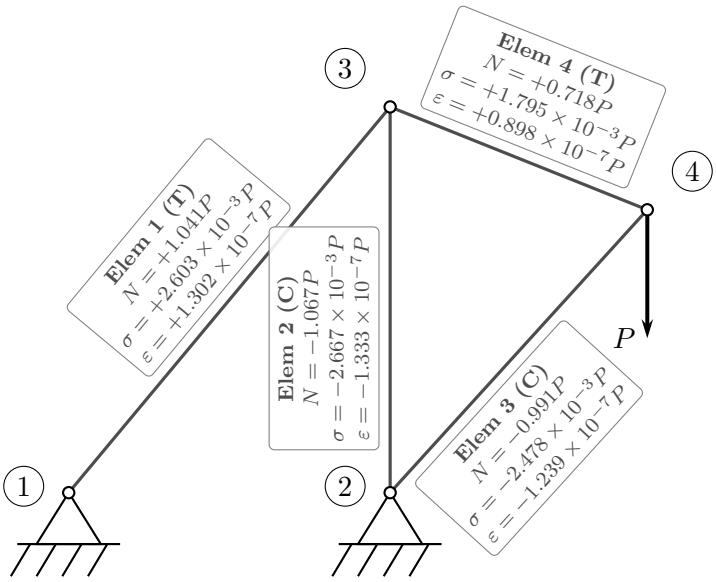

Figure 3: Internal normal forces, stresses, and strains for each element in terms of applied load P.

7 Part (d): First Yield

Yielding in element e occurs when $|\sigma_e| = \sigma_y$, i.e. $P_y^{(e)} = \sigma_y / |\sigma_e/P|$:

e	$\lvert\sigma_e/P\rvert$ (MPa/N)	$P_y^{(e)}$ (N)
1	2.603×10^{-3}	115 233
2	$\mathbf{2.667 \times 10^{-3}}$	**112 500**
3	2.478×10^{-3}	121 081
4	1.795×10^{-3}	167 126

$$\boxed{\text{Element 2 yields first at } P_y = 112\,500 \text{ N} = 112.5 \text{ kN} \quad \text{(compression).}} \tag{12}$$

Verification at $P = 112\,500$ N:

$$\begin{Bmatrix} \sigma_1 \\ \sigma_2 \\ \sigma_3 \\ \sigma_4 \end{Bmatrix} = 112\,500 \times 10^{-3} \begin{Bmatrix} +2.603 \\ -2.667 \\ -2.478 \\ +1.795 \end{Bmatrix} = \begin{Bmatrix} +292.9 \\ -300.0 \\ -278.7 \\ +201.9 \end{Bmatrix} \text{MPa} \quad \Longrightarrow \quad |\sigma_e| \le \sigma_y = 300 \,\forall\, e$$

8 Part (e): First Buckling

Only compressed members ($N_e < 0$) can buckle; from Equation (11), these are elements 2 and 3. For a pinned–pinned column, the Euler critical load is

$$P_{\text{cr}}^{(e)} = \frac{\pi^2 EI}{L_e^2}. \tag{13}$$

The problem gives $A = 400$ mm^2 but not the cross-section shape. Assuming a square section: $a = \sqrt{A} = 20$ mm, $I = a^4/12 = 13\,333.3$ mm^4. The internal axial force in element e is $|N_e| = |N_e/P| \times P$; buckling occurs when $|N_e| = P_{\text{cr}}^{(e)}$, i.e.

$$P_{\text{buckle}}^{(e)} = \frac{P_{\text{cr}}^{(e)}}{|N_e/P|}.$$

e	L_e (mm)	$\lvert N_e/P\rvert$	$P_{\text{cr}}^{(e)} = \dfrac{\pi^2 EI}{L_e^2}$ (N)	$P_{\text{buckle}}^{(e)} = \dfrac{P_{\text{cr}}^{(e)}}{\lvert N_e/P\rvert}$ (N)
1	3905	1.041	—	tension, no buckling
2	**3000**	**1.067**	$\dfrac{\pi^2 \times 20000 \times 13333.3}{3000^2} = \mathbf{292.43}$	$\dfrac{292.43}{1.067} = \mathbf{274.16}$
3	2973	0.991	$\dfrac{\pi^2 \times 20000 \times 13333.3}{2973^2} = 297.73$	$\dfrac{297.73}{0.991} = 300.41$
4	2154	0.718	—	tension, no buckling

Since $P_{\text{buckle}}^{(2)} < P_{\text{buckle}}^{(3)}$:

$$\boxed{\text{Element 2 buckles first at } P_{\text{buckle}} = 274.2 \text{ N} \approx 0.274 \text{ kN} \quad \text{(assuming square cross-section).}} \tag{14}$$

Remark: $P_{\text{buckle}} \approx 274$ N $\ll P_y = 112\,500$ N; buckling governs. The slenderness ratio $\lambda = L/r = 3000/(20/\sqrt{12}) = 519.6$ confirms a very slender member.

9 Deformed Shape

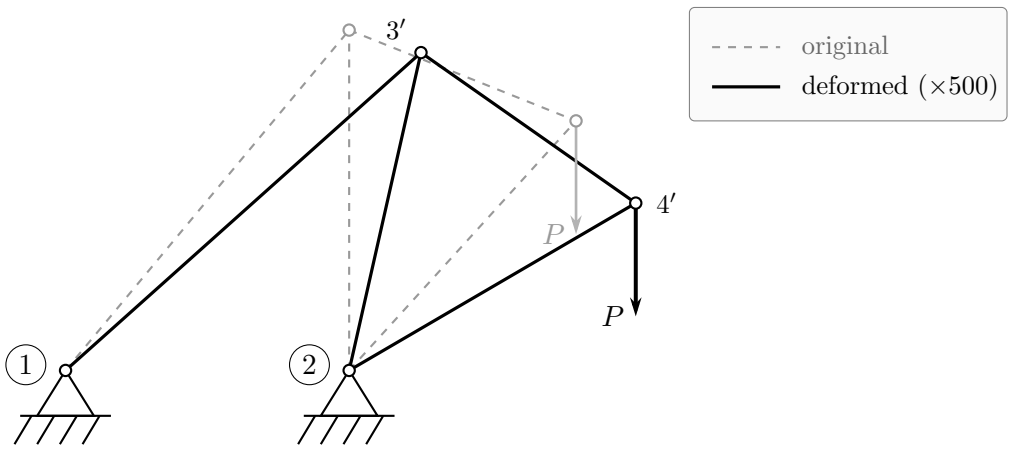

Figure 4: Original (dashed) and exaggerated deformed shape.

10 OpenSees Validation

The hand-computation results are independently validated using **OpenSeesPy 3.5.1** (run in a `conda` environment with Python 3.10). The same truss is modelled with `Truss` elements and an `Elastic` material ($E = 20\,000$ MPa, $A = 400$ mm^2).

Displacement comparison (per unit $P = 1$ N):

Node	u_{hand}	u_{OS}	v_{hand}	v_{OS}	Max. rel. err.
3	$+1.2740\times10^{-3}$	$+1.27404\times10^{-3}$	-4.0000×10^{-4}	-4.0000×10^{-4}	0.003%
4	$+1.0583\times10^{-3}$	$+1.05831\times10^{-3}$	-1.4599×10^{-3}	-1.45989×10^{-3}	0.001%

Strain and force comparison:

e	$\varepsilon_{\text{hand}}/P$	$\varepsilon_{\text{OS}}/P$	Rel. err.
1	$+1.302\times10^{-7}$	$+1.30171\times10^{-7}$	0.022%
2	-1.333×10^{-7}	-1.33333×10^{-7}	0.025%
3	-1.239×10^{-7}	-1.23884×10^{-7}	0.013%
4	$+8.975\times10^{-8}$	$+8.97527\times10^{-8}$	0.003%

Critical loads:

	Hand	OpenSees
First yield (Elem. 2)	$P_y = 112\,500$ N	$P_y = 112\,500.000$ N
First buckling (Elem. 2)	$P_{\text{cr}} = 274.16$ N	$P_{\text{cr}} = 274.156$ N

All results match to within $< 0.03\%$ relative error, confirming the hand computation. The support reactions also satisfy equilibrium exactly: $\sum F_x = 0$, $\sum F_y = 0$, $\sum M = 0$.

11 Discussion

11.1 Demand vs. Capacity

The analysis reveals a **critical imbalance** between the two failure modes:

$$\frac{P_y}{P_{\text{cr}}} = \frac{112\,500}{274.2} \approx 410.$$

The Euler buckling load of Element 2 ($P_{\text{cr}} = 274.2$ N) is roughly **410 times smaller** than the yield load ($P_y = 112\,500$ N). This means the structure will fail by buckling at an extremely low load level, long before any material yielding occurs. From a design standpoint this is unacceptable: the full material capacity is never utilised.

11.2 Role of Each Element

e	Connectivity	L (mm)	σ_e at P_y	Nature	λ	Assessment
1	1→3 (diagonal)	3905.1	+292.9	T	338.3	Near yield; efficiently utilised. Buckling not relevant (tension).
2	2→3 (vertical)	3000.0	−300.0	C	519.6	**Critical element.** Yields first *and* buckles first ($P_{\text{cr}}^{(2)} = 292.4$ N).
3	2→4 (diagonal)	2973.2	−278.7	C	514.9	Buckles shortly after Elem. 2 ($P_{\text{cr}}^{(3)} = 297.7$ N).
4	3→4 (upper)	2154.1	+201.9	T	372.9	Well below yield; no buckling risk.

Table 1: Element summary at $P_y = 112\,500$ N. T = tension, C = compression. $\lambda = L/r$, $r = a/\sqrt{12} = 5.77$ mm.

11.3 Design Deficiencies and Recommendations

#	Deficiency	Recommendation
1	**Excessive slenderness.** Elements 2 and 3 have $\lambda > 500$, far exceeding $\lambda_{\max} = 200$ (Eurocode 3). $r = 5.77$ mm is too small for $L \approx 3000$ mm.	Increase section of compression members to 55×55 mm ($r_{\min} = 15$ mm), raising $P_{\text{cr}}^{(2)}$ from 292 N to $\approx 18\,800$ N.
2	**Buckling governs.** $P_y/P_{\text{cr}} \approx 410$; material capacity is wasted.	Balance stability and strength such that $P_{\text{cr}} \gtrsim P_y$.
3	**No lateral bracing.** Effective buckling lengths equal full member lengths.	Add mid-span braces to Elem. 2 and 3; halving L_{eff} quadruples P_{cr}.
4	**No redundancy.** Statically determinate: loss of any element $\Rightarrow$ collapse.	Add diagonal brace 1→4 for alternative load path and robustness.

Table 2: Design deficiencies and engineering recommendations.

11.4 Demand/Capacity Summary

At the first buckling load $P = 274.2$ N:

e	σ_e (MPa)	σ_e/σ_y	D/C (yield)	$P_{\text{cr}}^{(e)}$ (N)	D/C (buckle)
1	+0.714	0.002	OK	—	tension
2	−0.732	0.002	OK	292.4	**1.00**
3	−0.680	0.002	OK	297.7	0.97
4	+0.493	0.002	OK	—	tension

Table 3: Demand/capacity ratios at $P = 274.2$ N (first buckling).

Element 2 reaches D/C = 1.0 for buckling while all yield D/C ratios are negligibly small ($\approx 0.2\%$). This confirms that **stability, not strength, is the governing limit state**, and the design must be revised to address the slenderness of the compression members.

12 Conclusion

The key findings are summarised below.

Aspect	**Finding**
Assembly	The 8×8 global stiffness matrix was assembled from four element contributions using the direct stiffness method. After applying the boundary conditions ($u_1 = v_1 = u_2 = v_2 = 0$), the reduced 4×4 system was solved for the free DOFs at Nodes 3 and 4.
Displacement	The free-node displacements scale linearly with P. Node 4 undergoes the largest vertical displacement ($v_4 = -1.460\times10^{-3}\,P$ mm), consistent with the load application point.
Internal forces	Elements 1 and 4 carry tension; Elements 2 and 3 carry compression. Element 2 carries the largest compressive force ($N_2 = -1.067\,P$ N), making it the most critical member.
First yield	First yielding occurs in Element 2 at $P_y = 112\,500$ N ($\sigma_2 = -\sigma_y = -300$ MPa).
First buckling	Euler buckling of Element 2 occurs at $P_{\text{cr}} = 274.2$ N, which is **410 times lower** than the yield load. Stability, not material strength, governs the design.
Validation	Independent analysis using OpenSeesPy 3.5.1 confirms all hand-computation results to within $< 0.03\%$ relative error. Equilibrium of reactions is exactly satisfied.
Design	The current 20×20 mm square cross-section results in excessive slenderness ($\lambda > 500$) for the compression members. Upgrading compressed elements to 55×55 mm sections and adding lateral bracing are recommended to bring P_{cr} above P_y.

Table 4: Summary of key findings.

In conclusion, the direct stiffness method provides an exact linear elastic solution for this truss system. The results highlight the importance of checking *both* strength and stability limit states: although the truss possesses significant material capacity ($P_y = 112.5$ kN), it is rendered structurally inadequate by premature Euler buckling at $P_{\text{cr}} = 274$ N. A practical redesign must address the slenderness of the compression members before the structure can be deployed safely.