Homework 2 — Solutions

CE 512 Finite Element Method

2026 Spring

Muhammet Yağcıoğlu

Student No: 290204042

March 4, 2026

İzmir Institute of Technology
Department of Civil Engineering

Contents

1 Problem Statement **2**

2 Element Connectivity and DOFs **2**

3 Element Geometry **3**

4 Part (a): Global Stiffness Matrix **3**

5 Part (b): Nodal Displacements **4**

6 Part (c): Element Strains **5**

7 Part (d): First Yield **6**

8 Part (e): First Buckling **6**

9 Deformed Shape **7**

10 OpenSees Validation **7**

11 Discussion **8**

11.1 Demand vs. Capacity 8

11.2 Role of Each Element 8

11.3 Design Deficiencies and Recommendations 9

11.4 Demand/Capacity Summary 9

12 Conclusion **9**

1 Problem Statement

The four-element plane truss in Figure 1 has $E = 20\,000$ MPa and $\sigma_y = 300$ MPa. All members are made from a square hollow section with outer dimensions 40×40 mm and thickness $t = 2.5$ mm, so

$$A = 40^2 - 35^2 = 375 \text{ mm}^2.$$

Nodes 1 and 2 are pinned; force P acts downward at node 4.

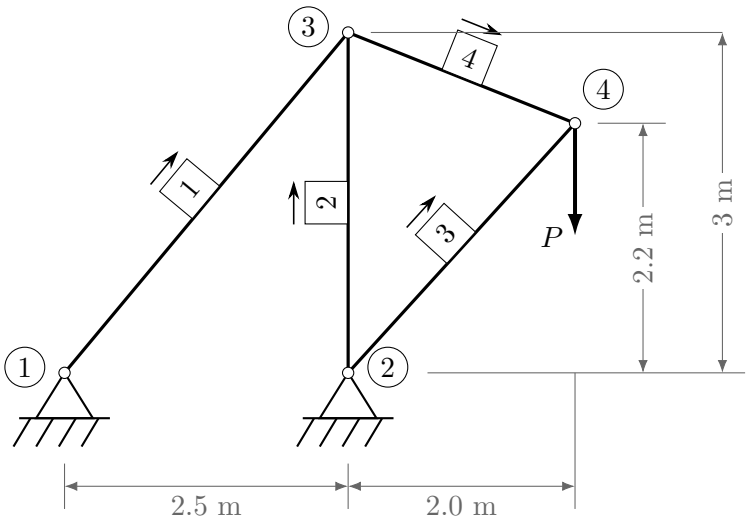

Figure 1: Four-element truss structure.

Required: (a) Global stiffness matrix. (b) Nodal displacements. (c) Element strains. (d) P at first yield. (e) P at first buckling.

2 Element Connectivity and DOFs

Each node carries DOFs (u_n, v_n); the global DOF vector is $\mathbf{d} = \{u_1, v_1, u_2, v_2, u_3, v_3, u_4, v_4\}^T$.

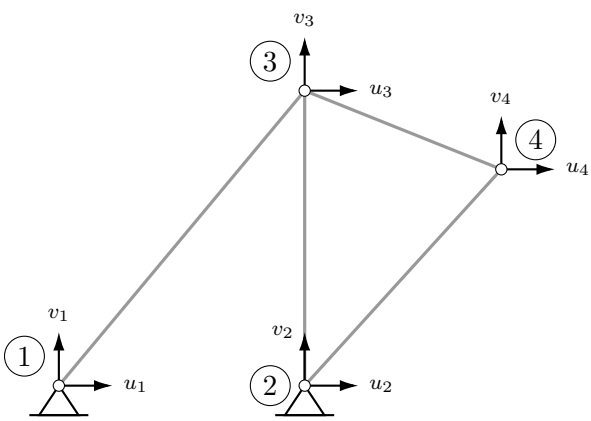

Figure 2: Global DOFs.

Element connectivity and DOF mapping:

e	i	j	Global DOFs: $(u_i,\, v_i,\, u_j,\, v_j)$
1	1	3	$(u_1,\, v_1,\, u_3,\, v_3)$
2	2	3	$(u_2,\, v_2,\, u_3,\, v_3)$
3	2	4	$(u_2,\, v_2,\, u_4,\, v_4)$
4	3	4	$(u_3,\, v_3,\, u_4,\, v_4)$

3 Element Geometry

For element e from node $i\,(x_i, y_i)$ to node $j\,(x_j, y_j)$:

$$L_e = \sqrt{(\Delta x_e)^2 + (\Delta y_e)^2}, \qquad c_e = \frac{\Delta x_e}{L_e}, \qquad s_e = \frac{\Delta y_e}{L_e}.$$

e	Δx_e	Δy_e	L_e (mm)	c_e	s_e	c_e^2	s_e^2	$c_e s_e$	EA/L_e
1	2500	3000	$500\sqrt{61} \approx 3905$	$\frac{5}{\sqrt{61}}$	$\frac{6}{\sqrt{61}}$	$\frac{25}{61}$	$\frac{36}{61}$	$\frac{30}{61}$	1920.55
2	0	3000	3000	0	1	0	1	0	2500.00
3	2000	2200	$200\sqrt{221} \approx 2973$	$\frac{10}{\sqrt{221}}$	$\frac{11}{\sqrt{221}}$	$\frac{100}{221}$	$\frac{121}{221}$	$\frac{110}{221}$	2522.52
4	2000	-800	$400\sqrt{29} \approx 2154$	$\frac{5}{\sqrt{29}}$	$\frac{-2}{\sqrt{29}}$	$\frac{25}{29}$	$\frac{4}{29}$	$\frac{-10}{29}$	3481.79

All Δx, Δy in mm; EA/L_e in N/mm.

4 Part (a): Global Stiffness Matrix

The local stiffness matrix for a truss element is

$$\mathbf{k}_{\text{local}}^{(e)} = \frac{EA}{L_e}\begin{bmatrix} 1 & -1 \\ -1 & 1 \end{bmatrix}. \tag{1}$$

The transformation matrix $\mathbf{T}_e$ relating local DOFs $\{u_i',\, u_j'\}^T$ to global DOFs $\{u_i, v_i, u_j, v_j\}^T$:

$$\mathbf{T}_e = \begin{bmatrix} c_e & s_e & 0 & 0 \\ 0 & 0 & c_e & s_e \end{bmatrix}. \tag{2}$$

The element stiffness in global coordinates $\mathbf{K}^{(e)} = \mathbf{T}_e^T\, \mathbf{k}_{\text{local}}^{(e)}\, \mathbf{T}_e$ gives

$$\mathbf{K}^{(e)} = \frac{EA}{L_e}\begin{bmatrix} c_e^2 & c_e s_e & -c_e^2 & -c_e s_e \\ c_e s_e & s_e^2 & -c_e s_e & -s_e^2 \\ -c_e^2 & -c_e s_e & c_e^2 & c_e s_e \\ -c_e s_e & -s_e^2 & c_e s_e & s_e^2 \end{bmatrix}. \tag{3}$$

Element 1 ($1 \to 3$, DOFs: u_1, v_1, u_3, v_3):

$$\mathbf{K}^{(1)} = \frac{EA}{L_1}\begin{bmatrix} c_1^2 & c_1 s_1 & -c_1^2 & -c_1 s_1 \\ c_1 s_1 & s_1^2 & -c_1 s_1 & -s_1^2 \\ -c_1^2 & -c_1 s_1 & c_1^2 & c_1 s_1 \\ -c_1 s_1 & -s_1^2 & c_1 s_1 & s_1^2 \end{bmatrix} = \begin{bmatrix} 787.11 & 944.53 & -787.11 & -944.53 \\ 944.53 & 1133.44 & -944.53 & -1133.44 \\ -787.11 & -944.53 & 787.11 & 944.53 \\ -944.53 & -1133.44 & 944.53 & 1133.44 \end{bmatrix} \text{ N/mm}$$

Element 2 ($2 \to 3$, DOFs: u_2, v_2, u_3, v_3), $c_2 = 0$, $s_2 = 1$:

$$\mathbf{K}^{(2)} = 2500\begin{bmatrix} 0 & 0 & 0 & 0 \\ 0 & 1 & 0 & -1 \\ 0 & 0 & 0 & 0 \\ 0 & -1 & 0 & 1 \end{bmatrix} = \begin{bmatrix} 0 & 0 & 0 & 0 \\ 0 & 2500.00 & 0 & -2500.00 \\ 0 & 0 & 0 & 0 \\ 0 & -2500.00 & 0 & 2500.00 \end{bmatrix} \text{ N/mm}$$

Element 3 ($2 \to 4$, DOFs: u_2, v_2, u_4, v_4):

$$\mathbf{K}^{(3)} = \frac{EA}{L_3}\begin{bmatrix} c_3^2 & c_3 s_3 & -c_3^2 & -c_3 s_3 \\ c_3 s_3 & s_3^2 & -c_3 s_3 & -s_3^2 \\ -c_3^2 & -c_3 s_3 & c_3^2 & c_3 s_3 \\ -c_3 s_3 & -s_3^2 & c_3 s_3 & s_3^2 \end{bmatrix} = \begin{bmatrix} 1141.41 & 1255.55 & -1141.41 & -1255.55 \\ 1255.55 & 1381.11 & -1255.55 & -1381.11 \\ -1141.41 & -1255.55 & 1141.41 & 1255.55 \\ -1255.55 & -1381.11 & 1255.55 & 1381.11 \end{bmatrix} \text{N/mm}$$

Element 4 ($3 \to 4$, DOFs: u_3, v_3, u_4, v_4):

$$\mathbf{K}^{(4)} = \frac{EA}{L_4}\begin{bmatrix} c_4^2 & c_4 s_4 & -c_4^2 & -c_4 s_4 \\ c_4 s_4 & s_4^2 & -c_4 s_4 & -s_4^2 \\ -c_4^2 & -c_4 s_4 & c_4^2 & c_4 s_4 \\ -c_4 s_4 & -s_4^2 & c_4 s_4 & s_4^2 \end{bmatrix} = \begin{bmatrix} 3001.54 & -1200.62 & -3001.54 & 1200.62 \\ -1200.62 & 480.25 & 1200.62 & -480.25 \\ -3001.54 & 1200.62 & 3001.54 & -1200.62 \\ 1200.62 & -480.25 & -1200.62 & 480.25 \end{bmatrix} \text{N/mm}$$

Assembling $\mathbf{K} = \sum_{e=1}^{4} \mathbf{A}_e^T \mathbf{K}^{(e)} \mathbf{A}_e$ by the direct stiffness method. The assembled global stiffness matrix is:

$$\mathbf{K} = \begin{bmatrix} u_1 & v_1 & u_2 & v_2 & u_3 & v_3 & u_4 & v_4 \\ 787.11 & 944.53 & 0 & 0 & -787.11 & -944.53 & 0 & 0 \\ 944.53 & 1133.44 & 0 & 0 & -944.53 & -1133.44 & 0 & 0 \\ 0 & 0 & 1141.41 & 1255.55 & 0 & 0 & -1141.41 & -1255.55 \\ 0 & 0 & 1255.55 & 3881.11 & 0 & -2500.00 & -1255.55 & -1381.11 \\ -787.11 & -944.53 & 0 & 0 & 3788.65 & -256.08 & -3001.54 & 1200.62 \\ -944.53 & -1133.44 & 0 & -2500.00 & -256.08 & 4113.69 & 1200.62 & -480.25 \\ 0 & 0 & -1141.41 & -1255.55 & -3001.54 & 1200.62 & 4142.95 & 54.94 \\ 0 & 0 & -1255.55 & -1381.11 & 1200.62 & -480.25 & 54.94 & 1861.36 \end{bmatrix} \text{N/mm} \quad (4)$$

5 Part (b): Nodal Displacements

Boundary conditions (pinned at nodes $1, 2$): $u_1 = v_1 = u_2 = v_2 = 0$. Partitioning into free (f) and restrained (r) sets:

$$\begin{Bmatrix} \mathbf{F}_f \\ \mathbf{F}_r \end{Bmatrix} = \begin{bmatrix} \mathbf{K}_{ff} & \mathbf{K}_{fr} \\ \mathbf{K}_{rf} & \mathbf{K}_{rr} \end{bmatrix} \begin{Bmatrix} \mathbf{d}_f \\ \mathbf{0} \end{Bmatrix} \quad \Longrightarrow \quad \mathbf{K}_{ff}\,\mathbf{d}_f = \mathbf{F}_f \quad (5)$$

with $\mathbf{d}_f = \{u_3,\, v_3,\, u_4,\, v_4\}^T$ and $\mathbf{F}_f = \{0,\, 0,\, 0,\, -P\}^T$. The reduced system is

$$\begin{bmatrix} 3788.65 & -256.08 & -3001.54 & 1200.62 \\ -256.08 & 4113.69 & 1200.62 & -480.25 \\ -3001.54 & 1200.62 & 4142.95 & 54.94 \\ 1200.62 & -480.25 & 54.94 & 1861.36 \end{bmatrix} \begin{Bmatrix} u_3 \\ v_3 \\ u_4 \\ v_4 \end{Bmatrix} \text{mm} = \begin{Bmatrix} 0 \\ 0 \\ 0 \\ -P \end{Bmatrix} \text{N}$$

Inverting $\mathbf{K}_{ff}$:

$$\mathbf{K}_{ff}^{-1} = 10^{-4} \times \begin{bmatrix} 18.4647 & -4.8000 & 14.9488 & -13.5898 \\ -4.8000 & 4.0000 & -4.6933 & 4.2667 \\ 14.9488 & -4.6933 & 14.7538 & -11.2887 \\ -13.5898 & 4.2667 & -11.2887 & 15.5722 \end{bmatrix} \text{mm/N}$$

$$\mathbf{d}_f = \mathbf{K}_{ff}^{-1}\mathbf{F}_f = P\,\mathbf{K}_{ff}^{-1} \begin{Bmatrix} 0 \\ 0 \\ 0 \\ -1 \end{Bmatrix}$$

$$\boxed{\begin{Bmatrix} u_3 \\ v_3 \\ u_4 \\ v_4 \end{Bmatrix} = P \times \begin{Bmatrix} +1.3590 \times 10^{-3} \\ -4.2667 \times 10^{-4} \\ +1.1289 \times 10^{-3} \\ -1.5572 \times 10^{-3} \end{Bmatrix} \text{ mm}} \tag{6}$$

Support reactions. $\mathbf{F}_r = \mathbf{K}_{rf}\,\mathbf{d}_f$:

$$\begin{Bmatrix} R_{x1} \\ R_{y1} \\ R_{x2} \\ R_{y2} \end{Bmatrix} = P \times \begin{Bmatrix} -2/3 \\ -4/5 \\ +2/3 \\ +9/5 \end{Bmatrix} \text{ N} \tag{7}$$

Equilibrium check:

$$\sum F_x = \left(-\tfrac{2}{3} + \tfrac{2}{3}\right)P = 0 \;\Rightarrow\; \text{satisfied}, \qquad \sum F_y = \left(-\tfrac{4}{5} + \tfrac{9}{5} - 1\right)P = 0 \;\Rightarrow\; \text{satisfied}$$

$$\sum M_1 = \tfrac{9}{5}P \times 2500 - P \times 4500 = (4500 - 4500)P = 0 \;\Rightarrow\; \text{satisfied}$$

6 Part (c): Element Strains

The axial strain in element e is

$$\varepsilon_e = \frac{1}{L_e}\begin{bmatrix} -c_e & -s_e & c_e & s_e \end{bmatrix} \begin{Bmatrix} u_i \\ v_i \\ u_j \\ v_j \end{Bmatrix}, \qquad \sigma_e = E\,\varepsilon_e, \qquad N_e = \sigma_e A. \tag{8}$$

Since $u_1 = v_1 = u_2 = v_2 = 0$, each element strain depends only on the free DOFs. Collecting all four strains into a single matrix operation:

$$\begin{Bmatrix} \varepsilon_1 \\ \varepsilon_2 \\ \varepsilon_3 \\ \varepsilon_4 \end{Bmatrix} = \begin{bmatrix} \frac{c_1}{L_1} & \frac{s_1}{L_1} & 0 & 0 \\ 0 & \frac{s_2}{L_2} & 0 & 0 \\ 0 & 0 & \frac{c_3}{L_3} & \frac{s_3}{L_3} \\ \frac{-c_4}{L_4} & \frac{-s_4}{L_4} & \frac{c_4}{L_4} & \frac{s_4}{L_4} \end{bmatrix} \begin{Bmatrix} u_3 \\ v_3 \\ u_4 \\ v_4 \end{Bmatrix} \tag{9}$$

Substituting the numerical values of c_e, s_e, L_e and the displacement vector from Equation (6):

$$\begin{Bmatrix} \varepsilon_1 \\ \varepsilon_2 \\ \varepsilon_3 \\ \varepsilon_4 \end{Bmatrix} = 10^{-4} \underbrace{\begin{bmatrix} 1.639 & 1.967 & 0 & 0 \\ 0 & 3.333 & 0 & 0 \\ 0 & 0 & 2.263 & 2.489 \\ -4.309 & 1.724 & 4.309 & -1.724 \end{bmatrix}}_{1/\text{mm}} \times P \begin{Bmatrix} 1.3590 \\ -0.4267 \\ 1.1289 \\ -1.5572 \end{Bmatrix} \times 10^{-3} \tag{10}$$

The resulting strains, stresses ($\sigma_e = E\varepsilon_e$), and axial forces ($N_e = A\sigma_e$) are:

$$\boxed{\begin{Bmatrix} \varepsilon_1 \\ \varepsilon_2 \\ \varepsilon_3 \\ \varepsilon_4 \end{Bmatrix} = P \begin{Bmatrix} +1.388 \\ -1.422 \\ -1.321 \\ +0.957 \end{Bmatrix} \times 10^{-7}, \quad \begin{Bmatrix} \sigma_1 \\ \sigma_2 \\ \sigma_3 \\ \sigma_4 \end{Bmatrix} = P \begin{Bmatrix} +2.777 \\ -2.844 \\ -2.643 \\ +1.915 \end{Bmatrix} \times 10^{-3}\,\text{MPa}, \quad \begin{Bmatrix} N_1 \\ N_2 \\ N_3 \\ N_4 \end{Bmatrix} = P \begin{Bmatrix} +1.041 \\ -1.067 \\ -0.991 \\ +0.718 \end{Bmatrix} \text{ N}} \tag{11}$$

($+$ = tension, $-$ = compression)

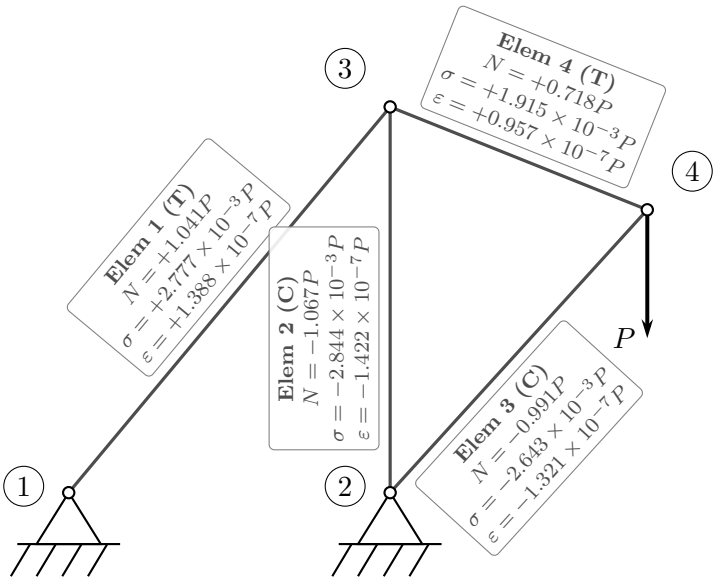

Figure 3: Internal normal forces, stresses, and strains for each element in terms of applied load P.

7 Part (d): First Yield

Yielding in element e occurs when $|\sigma_e| = \sigma_y$, i.e. $P_y^{(e)} = \sigma_y / |\sigma_e/P|$:

e	$\lvert\sigma_e/P\rvert$ (MPa/N)	$P_y^{(e)}$ (N)
1	2.777×10^{-3}	108 031
2	$\mathbf{2.844 \times 10^{-3}}$	**105 469**
3	2.643×10^{-3}	113 514
4	1.915×10^{-3}	156 680

$$\boxed{\text{Element 2 yields first at } P_y = 105\,469 \text{ N} \approx 105.47 \text{ kN} \quad \text{(compression).}} \tag{12}$$

Verification at $P = 105\,469$ N:

$$\begin{Bmatrix} \sigma_1 \\ \sigma_2 \\ \sigma_3 \\ \sigma_4 \end{Bmatrix} = 105\,469 \times 10^{-3} \begin{Bmatrix} +2.777 \\ -2.844 \\ -2.643 \\ +1.915 \end{Bmatrix} = \begin{Bmatrix} +292.9 \\ -300.0 \\ -278.7 \\ +201.9 \end{Bmatrix} \text{MPa} \quad \Longrightarrow \quad |\sigma_e| \le \sigma_y = 300 \,\forall\, e$$

8 Part (e): First Buckling

Only compressed members ($N_e < 0$) can buckle; from Equation (11), these are elements 2 and 3. For a pinned–pinned column, the Euler critical load is

$$P_{\text{cr}}^{(e)} = \frac{\pi^2 EI}{L_e^2}. \tag{13}$$

The section is a square hollow section with outer dimensions 40×40 mm and wall thickness $t = 2.5$ mm. Therefore

$$A = 40^2 - 35^2 = 375 \text{ mm}^2, \qquad I = \frac{40^4 - 35^4}{12} = 88\,281.25 \text{ mm}^4.$$

The internal axial force in element e is $|N_e| = |N_e/P| \times P$; buckling occurs when $|N_e| = P_{\text{cr}}^{(e)}$, i.e.

$$P_{\text{buckle}}^{(e)} = \frac{P_{\text{cr}}^{(e)}}{|N_e/P|}.$$

e	L_e (mm)	$\lvert N_e/P\rvert$	$P_{\text{cr}}^{(e)} = \dfrac{\pi^2 EI}{L_e^2}$ (N)	$P_{\text{buckle}}^{(e)} = \dfrac{P_{\text{cr}}^{(e)}}{\lvert N_e/P\rvert}$ (N)
1	3905	1.041	—	tension, no buckling
2	**3000**	**1.067**	$\dfrac{\pi^2 \times 20000 \times 88281.25}{3000^2} = \mathbf{1936.22}$	$\dfrac{1936.22}{1.067} = \mathbf{1815.21}$
3	2973	0.991	$\dfrac{\pi^2 \times 20000 \times 88281.25}{2973^2} = 1971.27$	$\dfrac{1971.27}{0.991} = 1989.03$
4	2154	0.718	—	tension, no buckling

Since $P_{\text{buckle}}^{(2)} < P_{\text{buckle}}^{(3)}$:

$$\boxed{\text{Element 2 buckles first at } P_{\text{buckle}} = 1815.2 \text{ N} \approx 1.815 \text{ kN} \quad \text{(square hollow section).}} \tag{14}$$

Remark: $P_{\text{buckle}} \approx 1815$ N $\ll P_y = 105\,469$ N; buckling still governs. The radius of gyration is $r = \sqrt{I/A} = 15.34$ mm, so $\lambda_2 = L_2/r = 195.5$ and $\lambda_3 = L_3/r = 193.8$.

9 Deformed Shape

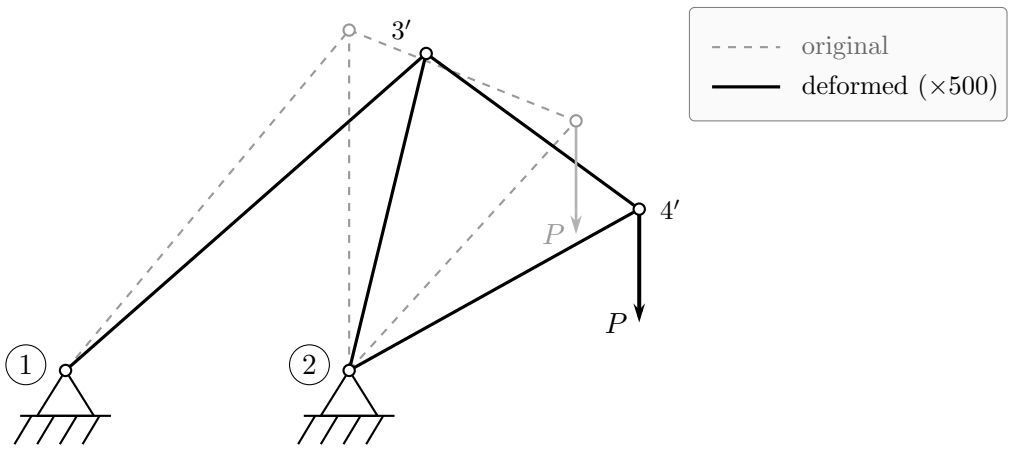

Figure 4: Original (dashed) and exaggerated deformed shape.

10 OpenSees Validation

The hand-computation results are independently validated using **OpenSeesPy 3.5.1** (run in a `conda` environment with Python 3.10). The same truss is modelled with `Truss` elements and an `Elastic` material ($E = 20\,000$ MPa, $A = 375$ mm^2). The hollow-section moment of inertia $I = 88\,281.25$ mm^4 is then used in the Euler buckling post-processing step.

Displacement comparison (per unit $P = 1$ N):

Node	u_{hand}	u_{OS}	v_{hand}	v_{OS}	Max. rel. err.
3	$+1.35898\times10^{-3}$	$+1.35898\times10^{-3}$	-4.26667×10^{-4}	-4.26667×10^{-4}	¡0.001%
4	$+1.12887\times10^{-3}$	$+1.12887\times10^{-3}$	-1.55722×10^{-3}	-1.55722×10^{-3}	¡0.001%

Strain and force comparison:

e	$\varepsilon_{\text{hand}}/P$	$\varepsilon_{\text{OS}}/P$	Rel. err.
1	$+1.38849\times10^{-7}$	$+1.38849\times10^{-7}$	¡0.001%
2	-1.42222×10^{-7}	-1.42222×10^{-7}	¡0.001%
3	-1.32143×10^{-7}	-1.32143×10^{-7}	¡0.001%
4	$+9.57363\times10^{-8}$	$+9.57363\times10^{-8}$	¡0.001%

Critical loads:

	Hand	OpenSees
First yield (Elem. 2)	$P_y = 105\,468.75$ N	$P_y = 105\,468.750$ N
First buckling (Elem. 2)	$P_{\text{cr}} = 1815.21$ N	$P_{\text{cr}} = 1815.210$ N

All results match to within rounding, confirming the hand computation. The support reactions also satisfy equilibrium exactly: $\sum F_x = 0$, $\sum F_y = 0$, $\sum M = 0$.

11 Discussion

11.1 Demand vs. Capacity

The analysis reveals a **critical imbalance** between the two failure modes:

$$\frac{P_y}{P_{\text{cr}}} = \frac{105\,469}{1815.2} \approx 58.1.$$

The Euler buckling load of Element 2 ($P_{\text{cr}} = 1815.2$ N) is still about **58 times smaller** than the yield load ($P_y = 105\,469$ N). The new hollow section improves stiffness and buckling resistance significantly, but the structure still fails by buckling well before any material yielding occurs. Material capacity therefore remains underutilised.

11.2 Role of Each Element

e	Connectivity	L (mm)	σ_e at P_y	Nature	λ	Assessment
1	1→3 (diagonal)	3905.1	+292.9	T	254.5	Near yield; efficiently utilised. Buckling not relevant (tension).
2	2→3 (vertical)	3000.0	−300.0	C	195.5	**Critical element.** Yields first *and* buckles first ($P_{\text{cr}}^{(2)} = 1936.2$ N).
3	2→4 (diagonal)	2973.2	−278.7	C	193.8	Buckles shortly after Elem. 2 ($P_{\text{cr}}^{(3)} = 1971.3$ N).
4	3→4 (upper)	2154.1	+201.9	T	140.4	Well below yield; no buckling risk.

Table 1: Element summary at $P_y = 105\,469$ N. T = tension, C = compression. $\lambda = L/r$, $r = \sqrt{I/A} = 15.34$ mm.

11.3 Design Deficiencies and Recommendations

#	Deficiency	Recommendation
1	**Buckling capacity remains low.** Elements 2 and 3 have $\lambda \approx 195$, and the governing external buckling load is only 1.82 kN.	Increase member inertia or reduce effective length. Matching P_{cr} to P_y requires about 58 times the current Euler capacity.
2	**Buckling governs.** $P_y/P_{\text{cr}} \approx 58$; material capacity is still wasted.	Balance stability and strength such that $P_{\text{cr}} \gtrsim P_y$.
3	**No lateral bracing.** Effective buckling lengths equal full member lengths.	Add mid-span braces to Elem. 2 and 3; halving L_{eff} quadruples P_{cr} to about 7.26 kN, still below P_y but safer than the unbraced case.
4	**No redundancy.** Statically determinate: loss of any element $\Rightarrow$ collapse.	Add diagonal brace 1→4 for alternative load path and robustness.

Table 2: Design deficiencies and engineering recommendations.

11.4 Demand/Capacity Summary

At the first buckling load $P = 1815.2$ N:

e	σ_e (MPa)	σ_e/σ_y	D/C (yield)	$P_{\text{cr}}^{(e)}$ (N)	D/C (buckle)
1	+5.041	0.017	OK	—	tension
2	−5.163	0.017	OK	1936.2	**1.00**
3	−4.797	0.016	OK	1971.3	0.91
4	+3.476	0.012	OK	—	tension

Table 3: Demand/capacity ratios at $P = 1815.2$ N (first buckling).

Element 2 reaches D/C = 1.0 for buckling while all yield D/C ratios remain small ($\leq 1.7\%$). This confirms that **stability, not strength, is the governing limit state**, and the design must still be revised to raise the buckling capacity of the compression members.

12 Conclusion

The key findings are summarised below.

Aspect	Finding
Assembly	The 8×8 global stiffness matrix was assembled from four element contributions using the direct stiffness method. After applying the boundary conditions ($u_1 = v_1 = u_2 = v_2 = 0$), the reduced 4×4 system was solved for the free DOFs at Nodes 3 and 4.
Displacement	The free-node displacements scale linearly with P. Node 4 undergoes the largest vertical displacement ($v_4 = -1.557\times10^{-3}\,P$ mm), consistent with the load application point.
Internal forces	Elements 1 and 4 carry tension; Elements 2 and 3 carry compression. Element 2 carries the largest compressive force ($N_2 = -1.067\,P$ N), making it the most critical member.
First yield	First yielding occurs in Element 2 at $P_y = 105\,469$ N ($\sigma_2 = -\sigma_y = -300$ MPa).
First buckling	Euler buckling of Element 2 occurs at $P_{\text{cr}} = 1815.2$ N, which is still **58.1 times lower** than the yield load. Stability, not material strength, governs the design.
Validation	Independent analysis using OpenSeesPy 3.5.1 confirms the updated hand-computation results to within rounding. Equilibrium of reactions is exactly satisfied.
Design	The current 40×40×2.5 mm square hollow section reduces slenderness to about $\lambda \approx 195$, but the compression members still buckle far before yielding. A larger section and/or shorter effective buckling length is required.

Table 4: Summary of key findings.

In conclusion, the direct stiffness method provides an exact linear elastic solution for this truss system. The revised hollow-section model shows that the structure has substantial material capacity ($P_y = 105.47$ kN), yet it is still rendered structurally inadequate by premature Euler buckling at $P_{\text{cr}} = 1.815$ kN. A practical redesign must therefore increase compression-member stability, not merely material strength, before the structure can be deployed safely.