FEMLAB

MATLAB Toolbox for the Finite Element Method
Version 1.0

O. Hededal and S. Krenk

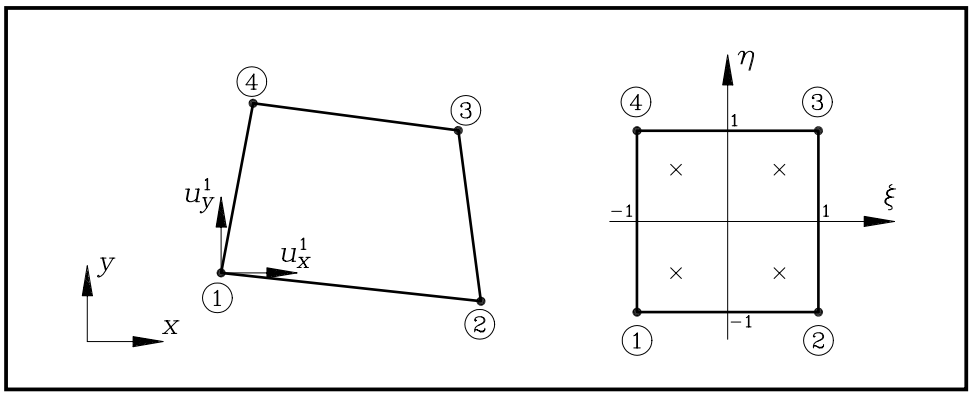

AALBORG UNIVERSITY

May 1995

Copyright © 1995 by O. Hededal and S. Krenk. The FEMLAB system consisting of manual and system files may be distributed and extended as desired subject to the following restrictions:

1. The authors reserve exclusive rights to any commercial development of the FEMLAB system.
2. The authors reserve the right to define and develop future versions of the FEMLAB system.
3. The FEMLAB system or parts of it may not be included in commercial program products without the author's consent.

Preface

FEMLAB is a programming environment for the Finite Element Method. It consists of a set of functions developed as an extension of the MATLAB system defining elements, element assembly, etc. The aim has been to develop a flexible research and education tool for the Finite Element Method. Thus the present - first - version of the FEMLAB system is not a complete extensive finite element program but rather a toolbox that can solve some problems and that may easily be extended by the user to solve other problems.

This version of FEMLAB has been developed over a period of eight months, where it has been used in a linear and a non-linear solid mechanics finite element course. Naturally this implies a number of limitations, e.g. in the limited element library and the lack of explicitly formulated procedures for time-dependent problems. However, our experience indicates that the FEMLAB system is a very useful tool, even in its present form. This manual is intended to make FEMLAB available in a concise form that assists the user of the present facilities, as well as the user who wishes to develop further extensions.

This manual is divided into three parts: Introduction, Tutorial, and Reference. The introducton briefly indicates the principles and structure of the FEMLAB system and a set of tables showing the various groups of functions. The tutorial section presents a detailed example, explaining input and output facilities and the MATLAB script file format used for the input. The reference section contains a concise description of all the FEMLAB functions in alphabetical order. The manual style conforms closely to the MATLAB reference manual.

Aalborg, May 1995

Ole Hededal & Steen Krenk

Contents

Introduction **1**
- **Programming principles . . .** 2
- **Elements, Functions and Variables . . . . . .** 5
- **References . . . . . .** 9

Tutorial **10**
- **Startup and FEMLAB examples on disk . . . . . .** 11
- **Example: Bending of Cantilever . . . . . .** 13

Reference manual **23**
- **assmk . . . . . .** 24
- **assmq . . . . . .** 25
- **cols . . . . . .** 26
- **init . . . . . .** 27
- **kbar . . . . . .** 28

kebar 31
keq4e 34
keq4epe 38
keq4eps 45
keq4p 50
ket3e 54
ket3p 56
kq4e 58
kq4epe 60
kq4eps 63
kq4p 66
kt3e 68
kt3p 70
plotelem 72
plotq4 73
plott3 75
plotu 77
qbar 78
qebar 81
qeq4e 84

qeq4epe 87
qeq4eps 92
qeq4p 97
qet3e 100
qet3p 103
qq4e 105
qq4epe 108
qq4eps 113
qq4p 118
qt3e 121
qt3p 124
reaction 127
rows 129
setbc 130
setload 132

Introduction

FEMLAB is a finite element analysis toolbox to be used with the MATLAB system. It has been developed using the MATLAB Vers. 4.0, [1,2]. A working knowledge of the MATLAB programming environment can be obtained from the *MATLAB Primer* [3].
The present manual assumes a basic knowledge of the finite element method. The following texts have been used: Ottosen and Petersson: *Introduction to the Finite Element Method* [4], Zienkiewicz and Taylor: *The Finite Element Method* [5,6], and Krenk: *Nonlinear analysis with finite elements* [7].
This chapter gives a brief introduction to the FEMLAB system. It describes the programming principles with the use of driver functions and script file input, and gives tables containing the FEMLAB functions organized according to type of use.

Programming principles

In the MATLAB system the two-dimensional array is the basic data type. Operators and functions exist for manipulation of these arrays without explicit reference to their dimension or size. This principle has been continued in the FEMLAB system. The user describes the finite element model in the form of two-dimensional arrays, containing e.g. the node coordinates of the model, the topology of a group of elements, etc. FEMLAB defines a set of functions - driver functions - for manipulation of these arrays without explicit reference to their dimension or size. Thus the user can set up finite element applications without explicit use of loops. If the user wants isolated information about a single node or a single element this is obtained as a row or column in the matrix.

Drivers and element functions

All model data in FEMLAB is represented as matrices. The matrices contain sets of data, e.g. topology or node coordinates, describing the global finite element model. Is convenient to use functions working directly on these matrices. In FEMLAB this is accomplished by use of driver functions. The typical use of a driver function is to carry out some operation on a group of elements, e.g. the calculation and assembly of element stiffness matrices. In traditional programming this would imply setting up a loop over the element group. In FEMLAB the loop is set up within the driver function. Thus, the driver function receives the global matrix information about the element group - topology, node coordinates, material properties, etc. - and gives result for the whole element group in matrix format. In this way the program file specifying the finite element analysis can be written with no, or only a few, loops. The driver function identifies the size of the matrices implicitly, and therefore information about individual elements, or smaller groups of elements, can be found by calling the driver function with a reduced matrix, referring only to a single element, or a small group of elements.

Input from script files

The most convenient way to use FEMLAB is to use two script files: a data file specifying the problem and program file specifying the sequence of commands effecting the analysis. The model is specified by matrices in the data file, and by naming the matrices in the script file they become MATLAB variables, when the script file is called. The use of the MATLAB script file concept for input facilitates the finite element modelling by making the MATLAB language directly available in the description of the model. This may be in the form of generic models, i.e. models specified by parameters, or using mathematical operations, e.g. for generating node coordinates and element meshes.

FE analysis sequence

To illustrate the principles a typical finite element analysis is described below. The finite element formulation is listed along with the FEMLAB command sequence. These commands

define an entire finite element analysis of a standard linear problem in FEMLAB. The command sequence may either be entered interactively by hand in MATLAB or given as a program file in the script file format as described in the Tutorial.

FE analysis sequence		
Operation	FE formulation	FEMLAB command
Get input (infile)		infile → T,X,G,P,C,dof
Initialize matrices	$\mathbf{K}, \mathbf{p}, \mathbf{q}$	[K,p,q] = init(rows(X),dof)
Create stiffness matrix	$\mathbf{K} = \sum_{elem} \int_{V^e} \mathbf{B}^T \mathbf{D}^e \mathbf{B}\, dV$	K = kq4e(K,T,X,G)
Set up load vector	$\mathbf{p} = \sum_{nodes} \mathbf{P}$	p = setload(p,P)
Impose constraints	$K_{ii} = K_{ii} + k \quad , \quad i \in \mathbf{C}$ $p_i = p_i + k * u_i \quad , \quad i \in \mathbf{C}$	[K,p] = setbc(K,p,C,dof)
Solve equations	$\mathbf{u} = \mathbf{K}^{-1}\, \mathbf{p}$	u = K\p
Derive internal forces,	$\mathbf{q} = \sum_{elem} \int_{V^e} \mathbf{B}^T \boldsymbol{\sigma}\, dV$	[q,S,E] = qq4e(q,T,X,G,u)
stresses and strains	$\boldsymbol{\sigma} = \mathbf{D}^e\, \boldsymbol{\varepsilon} \quad , \quad \boldsymbol{\varepsilon} = \mathbf{B}\, \mathbf{u}$	

The first part of a finite element application consists of defining the model. The model is defined in the data file and is read into the MATLAB environment writing the name infile of the data file. The function init allocates and initializes the global matrices according to the number of element nodes and the number of degrees of freedom per node.
The next part consists of creating the global stiffness matrix, the load vector and introduction of the boundary conditions. The stiffness driver kq4e for a 4-node elastic element (q4e) sets up an internal loop over all elements in the topology matrix T gradually creating the global stiffness matrix K. The function setload loops over all defined point loads given in the matrix P and transfers this information to the global load vector p. Finally, boundary conditions are imposed by modifying the stiffness matrix and the load vector in the positions corresponding to the prescribed degrees of freedom given in C.
The vector u of the unknown degrees of freedom is determined by solving the system of linear equations. From the this vector the element properties such as internal forces, stresses and strains can be derived. The driver qq4e sets up an internal loop over all elements in the topology T in order to obtain the sum of the internal forces q corresponding to the current deformation of the model. This operation requires the strain and stress to be evaluated, and thus stresses and strains are also available as output.

This sequence defines a finite element application for a linear problem. For nonlinear problems iterations on the solution u are needed to establish equilibrium. This requires the user to set up a loop for updating the global stiffness matrix, solving a new linear equation system and evaluating the internal forces until a converged solution is obtained. Examples of nonlinear problems are included on the system disk.

Elements, Functions and Variables

In order to make the implementation and use of different element types as uniform as possible a name convention is used for elements, functions and variables. In the following the name convention is introduced together with a description of the function types and variables.

Elements

All elements are identified by their type. The continuum elements in 1D, 2D or 3D are identified as ln, tn, qn or hn. ln is a line element with n nodes, tn is a plane triangle element with n nodes, qn is a plane quadrilateral with n nodes and hn is a hexahedral element with n nodes. The continuum type is indicated by the suffix following the element type tnp is a triangular potential element and qne is a quadrilateral elastic element. The current standard problems are potential problems (p), elasticity problems (e) and elasto-plastic problems (ep). Special elements such as bars, beams or plates are identified by type name, e.g. bar.

FEMLAB **Element Types** (currently available)		
Name	Type	Description
t3p	Linear	3-node constant flux triangle for potential problems
t3e	Linear	3-node constant strain triangle for elastic problems in plane stress or plane strain
q4p	Bilinear	4-node quadrilateral element for potential problems
q4e	Bilinear	4-node quadrilateral element for elastic problems in plane stress or plane strain
q4epe	Bilinear	4-node quadrilateral plain strain element. The material model is von Mises or associated Drucker-Prager with linear isotropic hardening.
q4eps	Bilinear	4-node quadrilateral plain stress element. The material model is von Mises or associated Drucker-Prager with linear isotropic hardening.
bar		2-node elastic bar element with linear or non-linear strain measure

The element names are contained in the function names used to describe each element.

Functions

FEMLAB provides 4 main categories of functions: element functions, drivers, modifiers and utility functions. All functions are implemented as M-files, where the function name is the

same as the file name. On-line help is obtained using the MATLAB command help on the function name, e.g. help kt3p, whereby the function header is listed.
The functions are identified by prefix that determines the function type, e.g. an element stiffness function is prefixed by ke, while the corresponding driver for creating the global stiffness matrix is prefixed k. For each element the element functions and drivers are identified by the element name as suffix to the function type name, e.g. keq4e is the element stiffness function for the 4-node elastic quadrilateral element. For each element type there are 4 functions: ke, k, qe and q. These should always be available for an element.
There are some general analysis functions for generating and modifying the finite element model. The main functions are setbc and setload that modify the global stiffness matrix and the global load vector for prescribed boundary conditions and nodal loads. The drivers make use of two utility functions assmk and assmq that assemble the element contributions into the global matrices and vectors. They transform from local degrees of freedom to global degrees of freedom and place the corresponding element entries in the global matrices.
A set of plot functions are included for graphical presentation of results. There are two types: node based plots and element based plots. The node based plots are the element mesh plot plotelem and a contour plot of a nodal variable plotu, e.g. the potential or a displacement component. The element based plots uses values evaluated at integration points to generate contour plots of a stress or strain component. These functions are prefixed with plot and suffixed with the element type e.g. t3 for the 3-node triangle element or q4 for the 4-node quadrilateral element.

FEMLAB Function Types

Prefix	Type	Description
ke	Element	Evaluates element stiffness matrix
qe	Element	Evaluates element internal force vector
k	Driver	Creates global stiffness matrix
q	Driver	Creates global internal force vector
set	Modifier	Sets boundary conditions
assm	Utility	Adds element contribution to global matrix or vector
plot	Utility	Plots element mesh and variables

Variables

In FEMLAB all model data are stored in named variables that can be accessed during a FEMLAB session. A set of standard names is defined for these variables. However, the user may use other names for any of the variables in a data and a program file.

Input

The model input is given in a script file. This file contains a definition of the global matrices of topology T, node coordinates X, material properties G, prescribed loads P and prescribed boundary conditions C.
The topology of a model is given in the matrix T. Each row e in T representing one element has the format

$$\mathsf{T}(e,:) \quad = \quad [\ node_1 \quad \ldots \quad node_{ne} \quad PropNo\ ]$$

where $node_1 \ \ldots \ node_{ne}$ are the element node numbers referring to one row in the node coordinate matrix X. $PropNo$ is the property identification number of the element referring to a row in the property matrix G. The node coordinates are given in the matrix X. Each row n in X representing one node has the format

$$\mathsf{X}(n,:) \quad = \quad [\ x_n \quad y_n \quad z_n\ ]$$

There may be 1, 2 or 3 columns in X depending on whether 1D, 2D or 3D analysis is carried out. The material properties are given in the matrix G. Row g gives the material properties for $PropNo = g$. The number of columns in G depends on the element type. Their format is given with the element stiffness functions ke$\cdots$.
The nodal loads are given in the matrix P with the format

$$\mathsf{P} \quad = \quad \begin{bmatrix} n_1 & p_1^1 & \ldots & p_{dof}^1 \\ n_2 & p_1^2 & \ldots & p_{dof}^2 \\ \vdots & \vdots & \vdots & \vdots \end{bmatrix}$$

n_i identifies the loaded node and $(p_1^n, \ldots, p_{dof}^n)$ is the load vector at node n. The number of loaded nodes corresponds to the number of rows in the load matrix P. dof is the number of degrees of freedom per node.
The boundary conditions are prescribed by the constraint matrix C.

$$\mathsf{C} \quad = \quad \begin{bmatrix} node_1 & dof_1 & u_1 \\ node_2 & dof_2 & u_2 \\ \vdots & \vdots & \vdots \end{bmatrix} \qquad \text{or} \qquad \mathsf{C} \quad = \quad \begin{bmatrix} node_1 & u_1 \\ node_2 & u_2 \\ \vdots & \vdots \end{bmatrix}$$

All constrained degrees of freedom are identified by node number $node_i$, the number of the relevant degree of freedom at the node dof_i, and the prescribed value u_i of this degree of freedom. For problems with a single degree of freedom per node, dof = 1, the simple format can be used. The number of rows in C corresponds to the number of constrained degrees of freedom.
During analysis a number of internal variables is created. First, the element variables used by the element functions to evaluate stiffness and internal forces. These are the element topology vector Te, the element node coordinates Xe and the element property matrix Ge. Other element variables may be used - these are described in the manual pages for the relevant function.

Results

The model is described in terms of the global stiffness K and the global load vector p. Their dimensions are determined by the total number of degrees of freedom. The primary result of the analysis is the degrees of freedom stored in the vector u with the same dimension as p. The internal force vector q arising from the deformation of the model is derive from u. In this process the stress S and strain E are evaluated as well. The stresses or strains are stored for all integration points in the element. Each row e in S represents one element and has the format

$$\mathsf{S}(e,:) \;=\; \left[\; \sigma_1^1 \quad \sigma_2^1 \quad \cdot \quad \sigma_s^1 \qquad \cdots \qquad \sigma_1^g \quad \sigma_2^g \quad \cdot \quad \sigma_s^g \;\right]$$

σ_i^m is stress component i of integration point m. g is the number of integration points in the element and s is the number of stress components. The strain matrix E has a similar format. Definition of the stress and strain components is given by the element functions ke$\cdots$ and qe$\cdots$.

FEMLAB **Variable Names**		
Name	Type	Description
T	Input	Global topology matrix
X	Input	Global node coordinate matrix
G	Input	Global material property matrix
P	Input	Global prescribed nodal load matrix
C	Input	Global prescribed nodal degrees of freedom matrix
dof	Input	Number of degree of freedom per node
Te	Local	Element topology matrix
Xe	Local	Element node coordinate matrix
Ge	Local	Element material property matrix
K	Model	Global stiffness matrix
p	Model	Global load vector
u	Result	Global degree of freedom vector - the unknowns
q	Result	Global internal force vector
S	Result	Global stress matrix
E	Result	Global strain matrix

References

[1] *MATLAB Reference Guide Vers. 4.0*, The Math Works Inc., Natick, Massachusetts, USA, 1992

[2] *MATLAB User's Guide Vers. 4.0*, The Math Works Inc., Natick, Massachusetts, USA, 1992

[3] K. Sigmon: *MATLAB Primer* 2nd Ed., Dept. of Mathematics, University of Florida, USA, 1992. (Available via anonymous ftp from `ftp.math.ufl.edu` as `primer35.ps` in the directory `pub/matlab`)

[4] N.S. Ottosen and H. Petersson: *Introduction to the Finite Element Method*, Prentice Hall, U.K., 1992.

[5] O.C. Zienkiewicz and R.L. Taylor: *The Finite Element Method Vol. 1 - Basic Formulation and Linear Problems* McGraw-Hill, London, U.K., 1989.

[6] O.C. Zienkiewicz and R.L. Taylor: *The Finite Element Method Vol. 2 - Solid and Fluid Mechanics, Dynamics and Non-Linearity* McGraw-Hill, U.K., 1991.

[7] S. Krenk: *Non-linear analysis with finite elements*, Dept. of Building Technology and Structural Engineering, Aalborg University, Denmark, 1993.

Tutorial

This section contains a brief explanation of the set up of FEMLAB and gives a detailed presentation of an example problem solved by FEMLAB. It describes the use of the MATLAB script file format for input and describes the output facilities. The tutorial explains the principles of the input structure and the execution of a sample problem. Other linear problems can be solved by a similar sequence of commands using the appropriate element functions. Examples of nonlinear problems are included in the 'examples' directory.

In the following MATLAB/FEMLAB commands are indented and written in SansSerif typeface.

Startup and FEMLAB examples on disk

A number of FEMLAB examples are included as disk files. They may be activated after performing a simple startup procedure. It is assumed that FEMLAB is installed with a home directory containing the FEMLAB system files and an 'examples' subdirectory containing the example script files.

Starting a FEMLAB session

To start a FEMLAB session the user starts MATLAB and places himself in the FEMLAB home directory. Example script files are located in the 'examples' subdirectory. To access these files it is necessary to append 'examples' to the search path. This is done by the command

```
setpath
```

The command executes the M-file 'setpath.m'. It uses the MATLAB command path to append the directory 'examples' to the standard MATLAB search path. The user can now load any of available examples. Alternatively, the directory name may be added to the standard MATLAB path, see MATLAB User's Guide for details.

It is convenient to specify a FEMLAB problem by two script files: a data file and a program file. The data file contains MATLAB variables describing the finite element model. The program file contains a sequence of commands defining a finite element application, e.g. a linear static analysis. Executing a sample problem from the 'examples' directory requires the user to load the model data from a data file and to execute a sequence of commands, given in a program file, defining an application. The model is loaded into MATLAB by writing the name of the data file, e.g.

```
canti
```

This command loads the MATLAB variables defined in the file 'canti.m'. A linear elastic analysis with 4-node quadrilateral elements is defined in the program file 'elastic.m'. The command sequence is executed by writing

```
elastic
```

Other sample problems may be executed in a similar manner.

FEMLAB examples on disk files

The examples listed below are given as M-files in the FEMLAB 'examples' directory. The examples are intended to be self-explanatory and are therefore heavily annotated. To solve other problems the user is advised to copy an existing example and modify it according to the current needs.

FEMLAB **Examples**			
Data file	Program file	Element	Description
canti.m	elastic.m	q4e	Bending of cantilever
square.m	elastic.m	q4e	Elastic analysis of rectangular plate
square.m	plastpe.m	q4epe	Elasto-plastic analysis of rectangular plate - plane strain
square.m	plastps.m	q4eps	Elasto-plastic analysis of rectangular plate - plane stress
hole.m	elastic.m	q4e	Elastic analysis of plate with circular hole
hole.m	plastpe.m	q4epe	Elasto-plastic analysis of plate with circular hole - plane strain
hole.m	plastps.m	q4eps	Elasto-plastic analysis of plate with circular hole - plane stress
flow.m	flowq4.m	q4p	Potential flow analysis with quadrilaterals
flow.m	flowt3.m	t3p	Potential flow analysis with triangles
bar01.m	nlbar.m	bar	Nonlinear analysis of truss structure
bar02.m	nlbar.m	bar	Nonlinear analysis of truss structure
bar03.m	nlbar.m	bar	Nonlinear analysis of truss structure

Example: Bending of Cantilever

Consider a cantilever beam in bending, Fig. 1. The beam is discretized into 27 nodes and 16 4-node bilinear elastic elements (Q4E) with a numbering as shown in the figure. The material is isotropic, linear elastic with Young's modulus $E = 100$ and Poisson's ratio $\nu = 0.3$. The cantilever is subjected to a resulting vertical end load of $P = -0.004$.

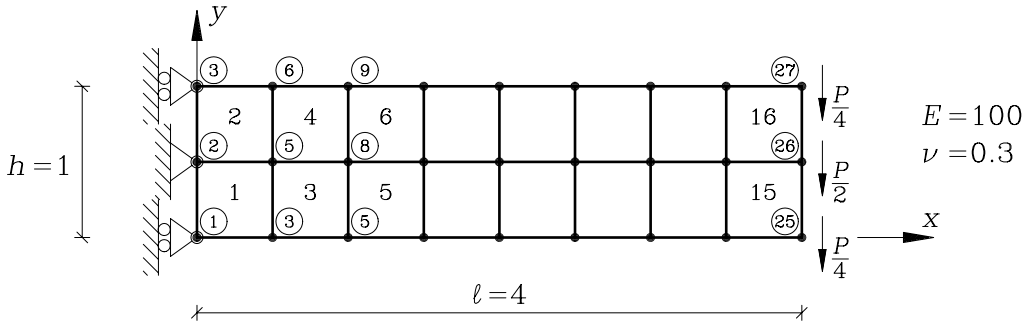

Figure 1: FE-model of cantilever beam.

A linear finite element application may be as follows:

1) Define model input e.g. read from input file
2) Initialize global matrices and vectors, e.g. using the init function
3) Create the stiffness matrix K
4) Create global load vector p
5) Modify K and p for prescribed boundary conditions
6) Solve linear equation system K u = p
7) Postprocessing: evaluation of internal forces, stress and strain.
8) Results presentation: tables and plots.

There are two ways to solving a problem in FEMLAB : by using script files to define model input and the sequence of function calls that defines the application, or interactively in MATLAB with the user entering all commands by hand. In the following the two approaches are illustrated.

Analysis with script files

A finite element application consists of 3 parts: the model generation, solution and post-processing. The model is described in terms of its topology, node coordinates, material properties and boundary conditions. These data must be available before the user can generate the finite element model, i.e. the stiffness matrix and load vector with inclusion

of boundary conditions. The model data is defined in a data file 'canti.m'. To load the data into FEMLAB the user writes the data file name,

```
canti
```

This defines MATLAB variables of topology T, node coordinates X, etc. The MATLAB command who will produce the a list of the defined variables.

The application is defined in a program file 'elastic.m'. This file defines the sequence of commands which generates the model, solves the linear equation system and produces plots of the results. Type

```
elastic
```

to carry out the linear elastic analysis of the cantilever. All results are available as usual MATLAB variables (use who to list variables) and the user may continue postprocessing creating other tables and plots.

A detailed description of the problem follows below. The two files 'canti.m' and 'elastic.m' are listed in the end of this chapter.

Interactive analysis in FEMLAB

The finite element analysis may also be carried out interactively in MATLAB . In the following the cantilever problem, Fig. 1, is described step by step.

Model input

The element mesh is defined in the topology matrix T. An element is defined by the element node numbers (referring to rows in X) and a material type (referring to a row in G).

$$\mathsf{T} = \begin{bmatrix} 1 & 4 & 5 & 2 & 1 \\ 2 & 5 & 6 & 3 & 1 \\ \vdots & \vdots & \vdots & \vdots & \vdots \\ 23 & 26 & 27 & 24 & 2 \end{bmatrix} \begin{array}{l} \leftarrow \textit{element 1} \\ \leftarrow \textit{element 2} \\ \\ \leftarrow \textit{element 16} \end{array}$$

The nodes are described by the coordinates (x, y) which are given as a row in the node coordinate matrix X.

$$\mathsf{X} = \begin{bmatrix} 0.0 & 0.0 \\ 0.0 & 0.5 \\ \vdots & \vdots \\ 4.0 & 1.0 \end{bmatrix} \begin{array}{l} \leftarrow \textit{node 1} \\ \leftarrow \textit{node 2} \\ \\ \leftarrow \textit{node 27} \end{array}$$

The global node number is equal to the row number in X. The material model is linear elastic with plane stress. The properties are defined by the material matrix G. In the

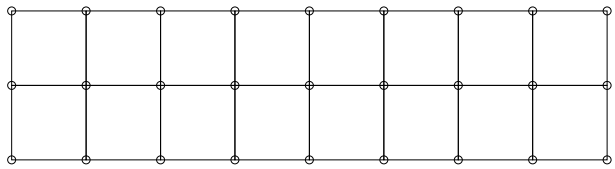

Figure 2: FEMLAB plot of nodes and elements.

present case G stores Young's modulus $E = 100$, Poisson's ratio $\nu = 0.3$ and specifies that the plane stress constitutive relation is to be used $type = 1$.

$$\mathsf{G} \;=\; [\;\; 100.0 \quad 0.3 \quad 1 \;\;] \;\leftarrow\; \textit{material 1}$$

As there is only one set of material properties G is a row vector.

To verify that the geometry and topology are entered correctly, the finite element mesh is plotted using the function plotelem.

$$\mathsf{plotelem}(\mathsf{T}, \mathsf{X})$$

This produces a plot of the nodes and elements, see Fig. 2.

Displacements are prescribed in 3 nodes. Node 2 is fixed vertically and horizontally. In node 1 and 3 the horizontal displacement is restrained. These conditions are defined in the constraints matrix C.

$$\begin{array}{lllll} \mathsf{C} \;=\; [& 1 & 1 & 0.000 & \leftarrow \textit{node 1} \\ & 2 & 1 & 0.000 & \leftarrow \textit{node 1} \\ & 2 & 2 & 0.000 & \leftarrow \textit{node 2} \\ & 3 & 1 & 0.000 \;] & \leftarrow \textit{node 3} \end{array}$$

The first column in C is the number of the constrained node, the second column holds the number of the degree of freedom ($u_x \equiv 1$ and $u_y \equiv 2$) and the last column sets the prescribed value.

The beam is subjected to 3 vertical downward point loads in node 25, 26 and 27. They are given as vectors in the load matrix P.

$$\begin{array}{lllll} \mathsf{P} \;=\; [& 25 & 0.000 & -0.001 & \leftarrow \textit{node 25} \\ & 26 & 0.000 & -0.002 & \leftarrow \textit{node 26} \\ & 27 & 0.000 & -0.001 \;] & \leftarrow \textit{node 27} \end{array}$$

The first column is the node number and the last two columns contain (P_x, P_y).

Model generation and solution

The global stiffness matrix K and the load vector p can now be created. First they are allocated and initialized. This is done by the init function, which uses the the total number

of nodes and the number of degree of freedom per node (which in this case is 2) to determine the size of the matrices.

$$[\mathsf{K}, \mathsf{p}, \mathsf{q}] = \mathsf{init}(\mathsf{rows}(\mathsf{X}), 2)$$

The command $\mathsf{rows}(\mathsf{X})$ gives the number of rows in X which is equal to the total number of nodes n in the model. The init function returns initialized versions of the global stiffness matrix $\mathsf{K}_{(2n\times 2n)}$, the load vector $\mathsf{p}_{(2n\times 1)}$ and the internal force vector $\mathsf{q}_{(2n\times 1)}$. The global stiffness matrix is created by calling the stiffness driver for the element

$$\mathsf{K} \;=\; \mathsf{kq4e}(\mathsf{K}, \mathsf{T}, \mathsf{X}, \mathsf{G});$$

The driver sets up a loop over all elements in the topology T and returns the assembled global stiffness matrix K. It uses the element function $\mathsf{keq4e}$ to create the element stiffness matrix for each element.

The prescribed loads P are transferred to the global load vector p by the $\mathsf{setload}$ function.

$$\mathsf{p} \;=\; \mathsf{setload}(\mathsf{p}, \mathsf{P})$$

The displacement boundary conditions are introduced by the function setbc which modifies the stiffness matrix and the load vector simultaneously.

$$[\mathsf{K}, \mathsf{p}] \;=\; \mathsf{setbc}(\mathsf{K}, \mathsf{p}, \mathsf{C}, 2)$$

Thereby a system of linear equations $\mathsf{K}\,\mathsf{u} = \mathsf{p}$ is formed with the displacements u as the unknowns. The equation system may be solved in different ways. Here, the left division operator ($\backslash$) is used

$$\mathsf{u} \;=\; \mathsf{K}\backslash\mathsf{p}$$

This command uses a Cholesky factorization of the system matrix followed by substitutions to obtain u.

The node displacements u are given as a vector. It is possible to use $\mathsf{plotelem}$ to show the deformed geometry by adding the displacements to the node coordinates. To do so the node displacement vector is reshaped into a matrix with 27 rows and 2 columns, i.e. in the same format as the coordinate matrix X. The MATLAB function $\mathsf{reshape}$ is used,

$$\mathsf{U} = \mathsf{reshape}(\mathsf{u}, 2, \mathsf{rows}(\mathsf{X}))'$$

To plot the deformed configuration in the same figure as the initial geometry the MATLAB command $\mathsf{hold\ on}$ is used before calling $\mathsf{plotelem}$.

$$\mathsf{hold\ on}$$
$$\mathsf{plotelem}(\mathsf{T}, \mathsf{X} + \mathsf{U}, ':')$$

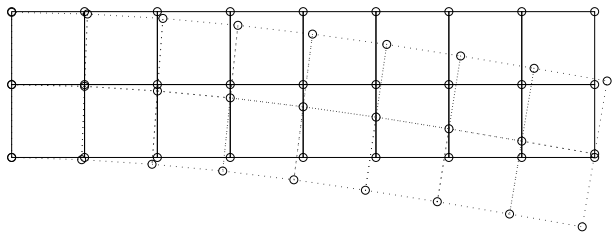

Figure 3: FEMLAB plot of initial (−) and deformed geometry (···).

This produces the deformed geometry plotted with dotted line on top of the initial geometry, see Fig. 3.

Postprocessing

Having solved the problem it is possible to derive different results, such as the internal forces (reactions), and stresses and strains in each integration point, using the driver function `qq4e`. The driver calls the element function `qeq4e` which evaluates the internal forces corresponding to the displacements `u`. The function call might be

$$\mathsf{q} \;=\; \mathsf{qq4e}(\mathsf{q}, \mathsf{T}, \mathsf{X}, \mathsf{G}, \mathsf{u})$$

This gives the internal force vector `q` with non-zero components at the position of the external loads and at the position of the constrained displacements. The horizontal and vertical reactions are stored on position (1,3,5) and 4 respectively. They can be obtained as

$$\mathsf{H} \;=\; \mathsf{q}(1:2:5)\ ,\ \mathsf{V} \;=\; \mathsf{q}(4)$$

producing

$$\begin{aligned} \mathsf{H} \;&= \\ &\quad\ \ 0.0160 \\ &\quad\ \ 0.0000 \\ &\quad -0.0160 \\ \mathsf{V} \;&= \\ &\quad\ \ 0.0400 \end{aligned}$$

During evaluation of the internal forces the element stress and strain are computed. It is therefore possible to obtain these from the same function `qq4e`. To do so add two extra return values in the function call,

$$[\mathsf{q}, \mathsf{S}, \mathsf{E}] \;=\; \mathsf{qq4e}(\mathsf{q}, \mathsf{T}, \mathsf{X}, \mathsf{u})$$

`S` contains the stresses in each element integration point and `E` is the corresponding strains. Each row in `S` or `E` contains the values for one element. For the `Q4E` element there are

3 stress components in each integration point $(\sigma_x, \sigma_y, \sigma_{xy})$. The normal stress in the x-direction σ_x for element 4 may be found as

$$\mathsf{sx4} \;=\; \mathsf{S}(4, 1:3:12)$$

which selects matrix element 1,4,7,10 in row 4,

$$\mathsf{sx4} \;=\; \begin{matrix} 0.0128 & 0.0129 & 0.0569 & 0.0568 \end{matrix}$$

A Q4E element has 4 integration points, thus also 4 values of each stress component. The shear strain $2\varepsilon_{xy}$ in element 1 to 3 is found as

$$\mathsf{exy13} \;=\; \mathsf{E}(1:3, 3:3:12)$$

which gives

$$\mathsf{exy13} \;=\; \begin{matrix} 1.0e-003 * & & & \\ -0.3164 & 0.1521 & 0.1084 & -0.3601 \\ -0.3601 & 0.1084 & 0.1521 & -0.3164 \\ -0.3029 & 0.0979 & 0.0949 & -0.3059 \end{matrix}$$

Finally, it is possible to create contour plots of stress or strain components using the plotq4 function. The function input is the topology T, the coordinates X, the stress matrix S or the strain matrix E and the number of e.g. the stress component $(\sigma_x \equiv 1, \sigma_y \equiv 2, \sigma_{xy} \equiv 3)$.

$$\mathsf{plotq4}(\mathsf{T}, \mathsf{X}, \mathsf{S}, 1)$$

This command produces the plot shown in Fig. 4.

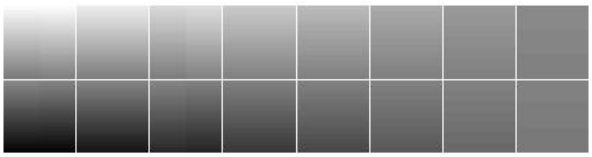

Figure 4: FEMLAB contour plot of normal stress σ_x.
White: tension, black: compression.

```
%.........................................
% File:canti.m
%
% Example : Bending of cantilever beam.
% Element Type: Q4E
% No. of Nodes: 27
% No. of Elements: 16
%.........................................

% Topology for 4-node element
%     Node1 Node2 Node3 Node4    PropNo
T = [  1     4     5     2         1
       2     5     6     3         1
       4     7     8     5         1
       5     8     9     6         1
       7    10    11     8         1
       8    11    12     9         1
      10    13    14    11         1
      11    14    15    12         1
      13    16    17    14         1
      14    17    18    15         1
      16    19    20    17         1
      17    20    21    18         1
      19    22    23    20         1
      20    23    24    21         1
      22    25    26    23         1
      23    26    27    24         1  ];

% Node coordinates
%      X      Y
X = [  0      0
       0      0.5
       0      1
       0.5    0
       0.5    0.5
       0.5    1
       1      0
       1      0.5
       1      1
       1.5    0
       1.5    0.5
       1.5    1
       2      0
```



```
       2      0.5
       2      1
       2.5    0
       2.5    0.5
       2.5    1
       3      0
       3      0.5
       3      1
       3.5    0
       3.5    0.5
       3.5    1
       4      0
       4      0.5
       4      1     ];

% No. of dof per node (Q4E element)
dof = 2;

% Material properties (Elastic element)
%       E     nu   type = plane stress
G = [  100    0.3    1  ];

% Constrained dof
%    NodeNo   DofNo   U
C = [  1        1     0.0
       1        2     0.0
       2        1     0.0
       3        1     0.0 ];

% Nodal loads
%    NodeNo    Px    Py
P = [  25      0.0   -0.001
       26      0.0   -0.002
       27      0.0   -0.001 ];
```

```
%.........................................
% File:elastic.m
%
% Driver for linear analysis of elastic
% problem with Q4E elements.
%
% Required input:
%  T:   Topology
%  X:   Node coordinates
%  G:   Material properties
%  C:   Prescribed displacements
%  P:   Prescribed nodal loads
%  dof: No. of dof per node
%.........................................

% Initialization:
%   K: Global stiffness matrix
%   p: Global load vector
%   q: Global internal force vector
[K,p,q] = init(rows(X),dof);

% Assembly of element stiffness matrices.
K = kq4e(K,T,X,G);

% Set nodal loads:
p = setload(p,P);

% Set boundary conditions.
[K,p] = setbc(K,p,C,dof);

% Solve equations:
%  u: displacement vector
u = K\p;

% Postprocessing:
%  q: internal force vector
%  S: stress matrix
%  E: strain matrix
[q,S,E] = qq4e(q,T,X,G,u);
```



```
% Open figure window No. 1
figure(1)
% Plot elements and nodes of topology T.
plotelem(T,X)
hold on
% Plot displaced configuration X+U (scaled)
U = reshape(u,cols(X),rows(X))';
plotelem(T,X+50*U,'c:')
hold off

% Open figure window No. 2
figure(2)
% Contour plot of stress component No. 1: Sx
plotq4(T,X,S,1)
```

Reference manual

This Reference Manual contains a concise description of the FEMLAB functions in alphabetical order. The standard MATLAB functions are documented in the MATLAB Reference Guide.

The reference manual follows the format of the MATLAB Reference Guide. A Theory section has been added containing Finite Element theory. The FEMLAB functions are then described in terms of the following headings:

Purpose	States purpose of command/function.
Syntax	Shows the format of the command/function.
Description	Describes command/function and its input and output formats.
Examples	Illustrates use of the command/function.
Theory	Contains background finite element theory.
Algorithm	Describes the algorithm of the function.
See Also	Reference to related FEMLAB and MATLAB functions.
Reference	Reference to publications.

assmk

Purpose

Assembles the global system matrix by adding element system matrix to existing global matrix. A system matrix may be stiffness matrix, mass matrix, conductivity matrix, dissipation matrix, etc.

Syntax

K = assmk(K,Ke,Te)

K = assmk(K,Ke,Te,dof)

Description

The global system matrix K is assembled from the element system matrix Ke. Each entry in Ke is renumbered according to the element topology matrix Te and added to K. Te has the format

$$\mathsf{Te} \;=\; [\; \underbrace{node_1 \;\; \ldots \;\; node_{ne}}_{\text{global node numbers}} \;\; PropNo \;]$$

where $node_1 \;\ldots\; node_{ne}$ are the element node numbers, and *PropNo* is the property identification number of the element. The parameter dof gives the number of degrees of freedom per node. Default is dof = 1.

Algorithm

Each node is associated with dof degrees of freedom. The degrees of freedom are numbered sequentially. For node n the degrees of freedom are numbered from $(n-1)\cdot\mathsf{dof}+1$ to $n\cdot\mathsf{dof}$. The global node number n of element node ne is found in the topology matrix as $n = \mathsf{Te}(ne)$. The degree of freedom d at element node ne therefore has the global number

$$\mathsf{ig} \;=\; (\mathsf{Te}(ne)-1)*\mathsf{dof} \;+\; d$$

For dof = 1 the global degrees of freedom are identified by the corresponding global node number.

The global system matrix K is assembled by a loop over all entries in the element system matrix Ke,

$$\mathsf{K}(\mathsf{ig}(i),\mathsf{ig}(j)) \;=\; \mathsf{K}(\mathsf{ig}(i),\mathsf{ig}(j)) + \mathsf{Ke}(i,j)$$

See Also

assmq

assmq

Purpose

Assembles a global force vector by adding an element force vector to existing global vector.

Syntax

q = assmq(q,qe,Te)

q = assmq(q,qe,Te,dof)

Description

The global force vector q is assembled from the element force vectors qe. The entries in qe are renumbered according to the element topology matrix Te and added to q. Te has the format

$$\mathsf{Te} \;=\; [\; \underbrace{node_1 \;\; \ldots \;\; node_{ne}}_{\text{global node numbers}} \;\; PropNo \;]$$

where $node_1 \;\ldots\; node_{ne}$ are the element node numbers, and *PropNo* is the property identification number of the element. The parameter dof gives the number of degrees of freedom per node. Default is dof = 1.

Algorithm

Each node is associated with dof degrees of freedom. The degrees of freedom are numbered sequentially. For node n the degrees of freedom are numbered from $(n-1)\cdot\mathsf{dof}+1$ to $n\cdot\mathsf{dof}$. The global node number n of element node ne is found in the topology matrix as $n = \mathsf{Te}(ne)$. The degree of freedom d at element node ne therefore has the global number

$$\mathsf{ig} \;=\; (\mathsf{Te}(ne)-1)*\mathsf{dof} \;+\; d$$

For dof = 1 the global degrees of freedom are identified by the corresponding global node number.

The global force vector q is assembled by a loop over all entries in the element force vector qe,

$$\mathsf{q}(\mathsf{ig}(i)) \;=\; \mathsf{q}(\mathsf{ig}(i)) + \mathsf{qe}(i)$$

See Also

assmk

cols

Purpose

Determines the number of columns in a matrix.

Syntax

n = cols(A)

Description

The number of columns n of matrix A are determined by the MATLAB function size. The function is a substitute for the command size(A,2) used by MATLAB version 4.0.

Examples

Consider the matrix A

$$\mathsf{A} = \begin{bmatrix} 1 & 2 & 4 \\ 9 & 5 & 3 \\ 4 & 7 & 7 \\ 3 & 3 & 6 \\ 4 & 9 & 1 \end{bmatrix}$$

For this matrix cols(A) will return 3.

See Also

rows, size

init

Purpose

Initilization of the global stiffness matrix, global load vector and the global internal force vector.

Syntax

K = init(nn,dof)

[K,p] = init(nn,dof)

[K,p,q] = init(nn,dof)

Description

The function allocates and initializes the global stiffness matrix K, the global load vector p and the global internal force vector q. The total number of degrees of freedom are determined from the number of nodes nn and the number of degrees of freedom per node dof. The matrices are initialized by the MATLAB function zeros.

Examples

For a finite element model with 5 nodes and 2 degrees of freedom per node the command

$$[\mathsf{K}, \mathsf{p}] \quad = \quad \mathsf{init}(5, 2)$$

allocates $\mathsf{K}_{10\times 10}$ as a zero matrix and $\mathsf{p}_{10\times 1}$ as a zero column vector.

See Also

zeros

kbar

Purpose

Driver for creating the global stiffness matrix for a group of 2-node elastic bar elements with linear or non-linear strain measure using the element function kebar.

Syntax

K = kbar(K,T,X,G)

K = kbar(K,T,X,G,u)

Description

Creates the element contribution to the global stiffness matrix K for a group of 2-node elastic bar elements specified by the topology matrix T. Row e in T(:,:) defines element e,

$$\mathsf{T}(e,:) \quad = \quad [\ node_1 \quad node_2 \quad PropNo\ ]$$

$node_i$ are the element node numbers and $PropNo$ is the property identification number of element e. X is the initial node coordinate array and G is the material property array. The total node displacements $(u_x, u_y, (u_z))$ are passed as

$$\mathsf{u} \quad = \quad [\quad \begin{array}{c} u_x^1 \\ u_y^1 \\ (u_z^1) \\ \vdots \\ u_x^n \\ u_y^n \\ (u_z^n) \end{array} \quad]$$

where n is the total number of nodes.

Algorithm

Default is linear analysis where the updated geometry $\mathsf{X1} = \mathsf{X}$. If the global displacement vector u is passed the geometrically non-linear Green strain measure is used. The updated global coordinates are

$$\mathsf{X1} \;=\; \mathsf{X} \;+\; \mathsf{reshape}(\mathsf{u}, \mathsf{cols}(\mathsf{X}), \mathsf{rows}(\mathsf{X}))'$$

For element e the node coordinate arrays are

$$\begin{aligned} \mathsf{Xe0} &= \mathsf{X}(\mathsf{T}(e, 1:2), :) \\ \mathsf{Xe1} &= \mathsf{X1}(\mathsf{T}(e, 1:2), :) \end{aligned}$$

and the element property array is

$$\mathsf{Ge} \;=\; \mathsf{G}(\mathsf{T}(e,3),:)$$

The element stiffness matrix Ke is created by the function kebar,

$$\mathsf{Ke} \;=\; \mathsf{kebar}(\mathsf{Xe0},\mathsf{Xe1},\mathsf{Ge})$$

For element e the stiffness matrix Ke is assembled into the global stiffness matrix K by the function assmk,

$$\mathsf{K} \;=\; \mathsf{assmk}(\mathsf{K},\mathsf{Ke},\mathsf{T}(e,:),\mathsf{dof})$$

The number of degrees of freedom is equal to the spatial dimension, dof = cols(X).

See Also

assmk, kebar

kebar

Purpose

Creates the element tangent stiffness matrix for a 2-node elastic bar element with linear or non-linear strain measure.

Syntax

Ke = kebar(Xe0,Xe1,Ge)

Description

Creates the element tangent stiffness matrix Ke for the 2-node elastic bar element in 2D or 3D with linear or non-linear strain measure, the cross section A and Young's modulus E.

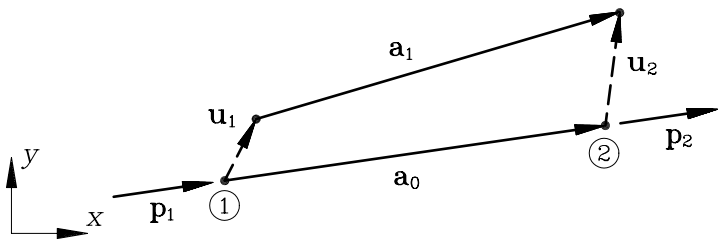

Bar element.

The element node coordinates of the initial geometry Xe0 and updated geometry Xe1 are passed in the format

$$\mathsf{Xe} = \begin{bmatrix} x_1 & y_1 & (z_1) \\ x_2 & y_2 & (z_2) \end{bmatrix}$$

The cross section area A and Young's modulus E are passed as

$$\mathsf{Ge} = [\ A \quad E\ ] \quad \text{or} \quad \mathsf{Ge} = [\ AE\ ]$$

The element vectors and matrices for a group of elements defined by a topology matrix T may be created and assembled by a single call of the function kbar.

Theory

The tangent stiffness matrix represents a bar with a deformation described in terms of the Green strain measure

$$\varepsilon_G = \frac{l_1^2 - l_0^2}{2l_0^2} = \frac{\mathbf{a}_1^T\mathbf{a}_1 - \mathbf{a}_0^T\mathbf{a}_0}{2\mathbf{a}_0^T\mathbf{a}_0}$$

where l_0 and l_1 are the length of the undeformed and the deformed bar, respectively. $\mathbf{a}_0$ and $\mathbf{a}_1$ are the corresponding element vectors.

Using the principle of virtual work leads to the equilibrium equation,[1],

$$\mathbf{p}_1 \;=\; -\mathbf{p}_2 \;=\; -\frac{N}{l_0}\,\mathbf{a}_1 \;=\; -\varepsilon_G \frac{EA}{l_0}\,\mathbf{a}_1$$

where $\mathbf{p}_1$ and $\mathbf{p}_2$ are the end forces and N is the axial force conjugate to ε_G. The tangent stiffness is obtained by differentiation of the equilibrium equation,

$$d\mathbf{p}_1 \;=\; -d\mathbf{p}_2 \;=\; -\left(\frac{\mathbf{a}_1}{l_0}\frac{dN}{d\mathbf{u}} + \frac{N}{l_0}\mathbf{I}\right) d\mathbf{u}$$

Using $dN/d\mathbf{u} = (EA/l_0^2)\,\mathbf{a}_1^T$ the tangent stiffness relation becomes

$$\begin{bmatrix} d\mathbf{p}_1 \\ d\mathbf{p}_2 \end{bmatrix} \;=\; \underbrace{\left(\frac{EA}{l_0^3}\begin{bmatrix} \mathbf{a}_1\mathbf{a}_1^T & -\mathbf{a}_1\mathbf{a}_1^T \\ -\mathbf{a}_1\mathbf{a}_1^T & \mathbf{a}_1\mathbf{a}_1^T \end{bmatrix} + \frac{N}{l_0}\begin{bmatrix} \mathbf{I} & -\mathbf{I} \\ -\mathbf{I} & \mathbf{I} \end{bmatrix}\right)}_{\mathbf{K}_t} \begin{bmatrix} d\mathbf{u}_1 \\ d\mathbf{u}_2 \end{bmatrix}$$

In the linear case $\mathbf{a}_1 = \mathbf{a}_0$ and the initial stress term vanishes as $N = 0$. The tangent stiffness then reduces to that of a linear bar described in terms of the engineering strain $\varepsilon_E = \Delta l / l_0$.

See Also

kbar

Reference

[1] S. Krenk: *Non-linear analysis with finite elements*, Dept. of Building Technology and Structural Engineering, Aalborg University, Denmark, 1993.

keq4e

Purpose

Creates the element stiffness matrix for a 2D 4-node bilinear quadrilateral elastic element in plane stress or strain.

Syntax

Ke = keq4e(Xe,Ge)

Description

Creates the element stiffness matrix Ke for the 2D 4-node quadrilateral elastic element with bilinear displacement interpolation and the elastic parameters E and ν.

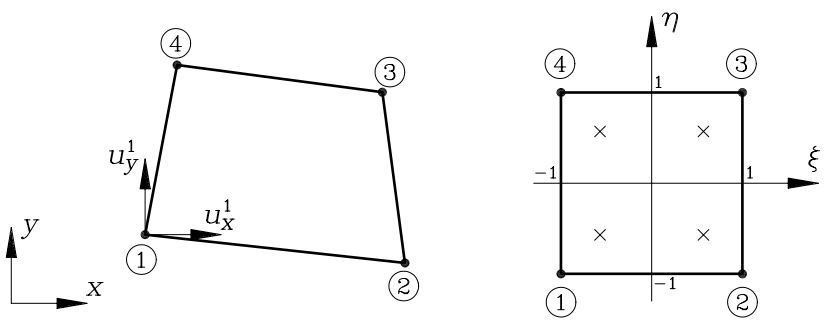

Q4E element in a) physical , b) basis plane.

The element node coordinates are passed as

$$\mathsf{Xe} = \begin{bmatrix} x_1 & y_1 \\ x_2 & y_2 \\ x_3 & y_3 \\ x_4 & y_4 \end{bmatrix}$$

The elastic parameters E and ν are passed as

$$\mathsf{Ge} = [\ E \quad \nu\ ] \quad \text{or} \quad \mathsf{Ge} = [\ E \quad \nu \quad type\ ]$$

where $type = 1$ for plane stress and $type = 2$ for plane strain. Default is plane stress.

The element vectors and matrices for a group of elements defined by a topology matrix T may be created and assembled by a single call of the function kq4e.

Theory

The stiffness matrix represents a linear approximation to the differential equation

$$\boldsymbol{\nabla}^T \left(\mathbf{D}\, \boldsymbol{\nabla} \mathbf{u}(x,y) \right) \;=\; 0 \quad , \quad (x,y) \text{ in } A$$

where $\mathbf{u}^T = [u_x \; u_y]$ is the displacement vector. $\mathbf{D}$ is the elastic constitutive matrix. The generalized gradient operator $\boldsymbol{\nabla}$ is

$$\boldsymbol{\nabla} \;=\; \begin{bmatrix} \frac{\partial}{\partial x} & 0 \\ 0 & \frac{\partial}{\partial y} \\ \frac{\partial}{\partial y} & \frac{\partial}{\partial x} \end{bmatrix}$$

The element stiffness matrix corresponding to this equation is

$$\mathbf{K} \;=\; \int_A \mathbf{B}^T \mathbf{D}\, \mathbf{B}\; dA \;=\; \int_{-1}^{1} \int_{-1}^{1} \mathbf{B}^T \mathbf{D}\, \mathbf{B}\, J\, d\xi\, d\eta$$

(ξ, η) are the normalized basic coordinates and J is the Jacobi determinant. The strain matrix $\mathbf{B}$ is defined as

$$\mathbf{B} \;=\; \boldsymbol{\nabla}\mathbf{N} \;=\; \begin{bmatrix} \frac{\partial N_1}{\partial x} & 0 & \cdots & \frac{\partial N_4}{\partial x} & 0 \\ 0 & \frac{\partial N_1}{\partial y} & \cdots & 0 & \frac{\partial N_4}{\partial y} \\ \frac{\partial N_1}{\partial y} & \frac{\partial N_1}{\partial x} & \cdots & \frac{\partial N_4}{\partial y} & \frac{\partial N_4}{\partial x} \end{bmatrix}$$

where $\mathbf{N}$ is the shape function matrix. $\mathbf{B}$ is computed as

$$\mathbf{B} \;=\; \mathbf{J}^{-T} \boldsymbol{\nabla}_{\boldsymbol{\xi}} \mathbf{N}$$

$\boldsymbol{\nabla}_{\boldsymbol{\xi}}$ is the generalized gradient operator in terms of the basic coordinates (ξ, η) and $\mathbf{J}$ is the Jacobi matrix. The constitutive matrix $\mathbf{D}$ for plane stress is

$$\mathbf{D} \;=\; \frac{E}{1-\nu^2} \begin{bmatrix} 1 & \nu & 0 \\ \nu & 1 & 0 \\ 0 & 0 & \frac{1}{2}(1-\nu) \end{bmatrix}$$

and for plane strain

$$\mathbf{D} \;=\; \frac{E}{(1+\nu)(1-2\nu)} \begin{bmatrix} 1-\nu & \nu & 0 \\ \nu & 1-\nu & 0 \\ 0 & 0 & \frac{1}{2}(1-2\nu) \end{bmatrix}$$

The integral is evaluated by 2×2 Gauss quadrature.

See Also

keq4p, kq4e, qeq4e

keq4epe

Purpose

Creates elasto-plastic element tangent stiffness matrix for a 2D 4-node quadrilateral bilinear element for plane strain analysis. The material model is von Mises or associated Drucker-Prager with linear isotropic hardening.

Syntax

Ke = keq4epe(Xe,Ge,Se,Ee)

Ke = keq4epe(Xe,Ge,Se,Ee,type)

Description

Creates the elasto-plastic element tangent stiffness matrix Ke for the 2D 4-node quadrilateral element with bilinear displacement interpolation.

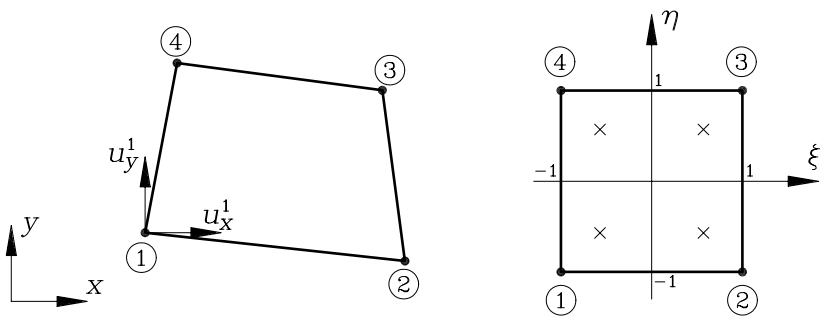

Q4EPE element in a) physical and b) basis plane.

The element node coordinates are passed as

$$\mathsf{Xe} = \begin{bmatrix} x_1 & y_1 \\ x_2 & y_2 \\ x_3 & y_3 \\ x_4 & y_4 \end{bmatrix}$$

The material parameters are the elastic parameters E and ν, the initial yield strength σ_0, the hardening modulus H and the slope of the meridian curve φ (Drucker-Prager). They are passed as

$$\mathsf{Ge} = \begin{bmatrix} E & \nu & \sigma_0 & H & \varphi \end{bmatrix}$$

The current stress state of each element integration point is stored in the matrix Se,

$$\mathsf{Se} = \begin{bmatrix} \sigma_x^1 & \sigma_y^1 & \sigma_z^1 & \sigma_{xy}^1 & \sigma_e^1 \\ \sigma_x^2 & \sigma_y^2 & \sigma_z^2 & \sigma_{xy}^2 & \sigma_e^2 \\ \sigma_x^3 & \sigma_y^3 & \sigma_z^3 & \sigma_{xy}^3 & \sigma_e^3 \\ \sigma_x^4 & \sigma_y^4 & \sigma_z^4 & \sigma_{xy}^4 & \sigma_e^4 \end{bmatrix}$$

σ_e is the current equivalent stress (von Mises stress). The current strain state of each element integration point is stored in the matrix Ee,

$$\mathsf{Ee} = \left[\begin{array}{ccccc} \varepsilon_x^1 & \varepsilon_y^1 & \varepsilon_z^1 = 0 & 2\varepsilon_{xy}^1 & \varepsilon_p^1 \\ \varepsilon_x^2 & \varepsilon_y^2 & \varepsilon_z^2 = 0 & 2\varepsilon_{xy}^2 & \varepsilon_p^2 \\ \varepsilon_x^3 & \varepsilon_y^3 & \varepsilon_z^3 = 0 & 2\varepsilon_{xy}^3 & \varepsilon_p^3 \\ \varepsilon_x^4 & \varepsilon_y^4 & \varepsilon_z^4 = 0 & 2\varepsilon_{xy}^4 & \varepsilon_p^4 \end{array} \right]$$

ε_p is the total equivalent plastic strain.

Von Mises material model is used if type = 1. Associated Drucker-Prager is used if type = 2. Default is type = 1.

The element matrices corresponding to a group of elements defined by a topology matrix T may be created and assembled by a single call of the function kq4epe.

Theory

The matrix represents a linear approximation to the differential equation

$$\boldsymbol{\nabla}^T \left(\mathbf{D}^{ep}(x,y)\, \boldsymbol{\nabla}\mathbf{u}(x,y) \right) \;=\; 0 \quad , \quad (x,y) \text{ in } A$$

where $\mathbf{u}^T = [u_x \;\; u_y]$ is the displacement vector. $\mathbf{D}^{ep}$ is the elasto-plastic constitutive matrix for plane strain. The generalized gradient operator $\boldsymbol{\nabla}$ is

$$\boldsymbol{\nabla} \;=\; \begin{bmatrix} \frac{\partial}{\partial x} & 0 \\ 0 & \frac{\partial}{\partial y} \\ 0 & 0 \\ \frac{\partial}{\partial y} & \frac{\partial}{\partial x} \end{bmatrix}$$

The element tangent stiffness matrix corresponding to this equation is

$$\mathbf{K} \;=\; \int_A \bar{\mathbf{B}}^T\, \mathbf{D}^{ep}\, \bar{\mathbf{B}}\; dA \;=\; \int_{-1}^{1} \int_{-1}^{1} \bar{\mathbf{B}}^T\, \mathbf{D}^{ep}\, \bar{\mathbf{B}}\, J\, d\xi\, d\eta$$

(ξ, η) are the normalized basic coordinates and J is the Jacobi determinant. The strain matrix $\mathbf{B}$ corresponding to the gradient operator $\boldsymbol{\nabla}$ is defined as

$$\mathbf{B} \;=\; \boldsymbol{\nabla}\mathbf{N} \;=\; \begin{bmatrix} \frac{\partial N_1}{\partial x} & 0 & \cdots & \frac{\partial N_4}{\partial x} & 0 \\ 0 & \frac{\partial N_1}{\partial y} & \cdots & 0 & \frac{\partial N_4}{\partial y} \\ 0 & 0 & \cdots & 0 & 0 \\ \frac{\partial N_1}{\partial y} & \frac{\partial N_1}{\partial x} & \cdots & \frac{\partial N_4}{\partial y} & \frac{\partial N_4}{\partial x} \end{bmatrix}$$

where $\mathbf{N}$ is the shape function matrix.

$\mathbf{B}$ is computed as

$$\mathbf{B} \;=\; \mathbf{J}^{-T}\boldsymbol{\nabla}_{\boldsymbol{\xi}}\mathbf{N}$$

$\boldsymbol{\nabla}_{\boldsymbol{\xi}}$ is the gradient matrix in terms of the basic coordinates (ξ, η) and $\mathbf{J}$ is the Jacobi matrix. To avoid locking of the element in nearly incompressible situations a modified strain matrix $\bar{\mathbf{B}}$ is used, [1],

$$\bar{\mathbf{B}}(\xi,\eta) \;=\; \left(\mathbf{I} - \tfrac{1}{2}\mathbf{m}\mathbf{m}^T\right)\mathbf{B}(\xi,\eta) \;+\; \tfrac{1}{2}\mathbf{m}\mathbf{m}^T\mathbf{W}(0,0)$$

where

$$\mathbf{W} \;=\; \left[\begin{array}{cccccccc} \frac{\partial N_1}{\partial x} & \frac{\partial N_1}{\partial y} & \frac{\partial N_2}{\partial x} & \frac{\partial N_2}{\partial y} & \frac{\partial N_3}{\partial x} & \frac{\partial N_3}{\partial y} & \frac{\partial N_4}{\partial x} & \frac{\partial N_4}{\partial y} \end{array}\right]$$

$$\mathbf{m}^T \;=\; \left[\begin{array}{cccc} 1 & 1 & 0 & 0 \end{array}\right]$$

and $\mathbf{I}$ is the unit matrix.

The yield condition is

$$f = \sigma_e + \varphi\,\sigma_m - (\sigma_0 + \varepsilon_p\,H)$$

with $\varphi = 0$ for von Mises materials. σ_e is the equivalent stress and σ_m is the mean stress.

If $f < 0$ the elastic stiffness is used,

$$\mathbf{D} \;=\; \frac{E}{(1+\nu)(1-2\nu)}\left[\begin{array}{cccc} 1-\nu & \nu & \nu & 0 \\ \nu & 1-\nu & \nu & 0 \\ \nu & \nu & 1-\nu & 0 \\ 0 & 0 & 0 & \frac{1}{2}(1-2\nu) \end{array}\right]$$

If $f = 0$ the elasto-plastic stiffness is used,

$$\mathbf{D}^{ep} \;=\; \mathbf{D} \;-\; \frac{1}{H + 3\mu + k\varphi^2}\left[9\mu^2\frac{(\boldsymbol{\sigma}')\,(\boldsymbol{\sigma}')^T}{\sigma_e^2} + (k\varphi)^2\,\mathbf{m}_p\mathbf{m}_p^T\right]$$

$\mu = E/(2(1+\nu))$ is the shear modulus, $k = E/(3(1-\nu))$ is the bulk modulus and $\boldsymbol{\sigma}'$ is the deviatoric part of the stress vector. The last term is evaluated if $\varphi \neq 0$ with $\mathbf{m}_p^T = [\,1\;1\;1\;0\,]$ giving the direction of the hydrostatic part of the plastic strain increment.

The integral is evaluated by 2×2 Gauss quadrature.

See Also

keq4e, keq4eps, kq4epe, qeq4epe

Reference

[1] O.C. Zienkiewicz and R.L. Taylor: *The Finite Element Method*, Vol. 1, pp. 319-372, McGraw-Hill, 1989.

keq4eps

Purpose

Creates elasto-plastic element tangent stiffness matrix for a 2D 4-node quadrilateral bilinear element for plane stress analysis. The material model is von Mises or associated Drucker-Prager with linear isotropic hardening.

Syntax

Ke = keq4eps(Xe,Ge,Se,Ee)

Ke = keq4eps(Xe,Ge,Se,Ee,type)

Description

Creates the elasto-plastic element tangent stiffness matrix Ke for the 2D 4-node quadrilateral element with bilinear displacement interpolation.

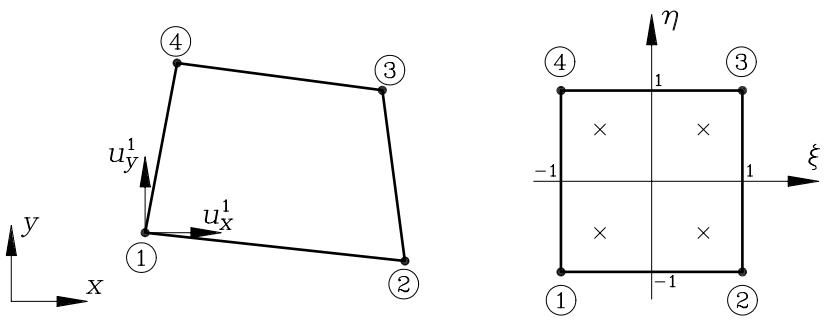

Q4EPS element in a) physical and b) basis plane.

The element node coordinates are passed as

$$\mathsf{Xe} = \begin{bmatrix} x_1 & y_1 \\ x_2 & y_2 \\ x_3 & y_3 \\ x_4 & y_4 \end{bmatrix}$$

The material parameters are the elastic parameters E and ν, the initial yield strength σ_0, the hardening modulus H and the slope of the meridian curve φ (Drucker-Prager). They are passed as

$$\mathsf{Ge} = \begin{bmatrix} E & \nu & \sigma_0 & H & \varphi \end{bmatrix}$$

The current stress state of each element integration point is stored in the matrix Se,

$$\mathsf{Se} = \begin{bmatrix} \sigma_x^1 & \sigma_y^1 & \sigma_{xy}^1 & \sigma_e^1 \\ \sigma_x^2 & \sigma_y^2 & \sigma_{xy}^2 & \sigma_e^2 \\ \sigma_x^3 & \sigma_y^3 & \sigma_{xy}^3 & \sigma_e^3 \\ \sigma_x^4 & \sigma_y^4 & \sigma_{xy}^4 & \sigma_e^4 \end{bmatrix}$$

σ_e is the current equivalent stress (von Mises stress). The current strain state of each element integration point is stored in the matrix Ee,

$$\mathsf{Ee} = \begin{bmatrix} \varepsilon_x^1 & \varepsilon_y^1 & 2\varepsilon_{xy}^1 & \varepsilon_p^1 \\ \varepsilon_x^2 & \varepsilon_y^2 & 2\varepsilon_{xy}^2 & \varepsilon_p^2 \\ \varepsilon_x^3 & \varepsilon_y^3 & 2\varepsilon_{xy}^3 & \varepsilon_p^3 \\ \varepsilon_x^4 & \varepsilon_y^4 & 2\varepsilon_{xy}^4 & \varepsilon_p^4 \end{bmatrix}$$

ε_p is the total equivalent plastic strain.

Von Mises material model is used if type = 1. Associated Drucker-Prager is used if type = 2. Default is type = 1.

The element matrices corresponding to a group of elements defined by a topology matrix T may be created and assembled by a single call of the function kq4eps.

Theory

The matrix represents a linear approximation to the differential equation

$$\boldsymbol{\nabla}^T \left(\mathbf{D}^{ep}(x,y)\, \boldsymbol{\nabla}\mathbf{u}(x,y) \right) \;=\; 0 \quad , \quad (x,y) \text{ in } A$$

where $\mathbf{u}^T = [u_x \;\; u_y]$ is the displacement vector. $\mathbf{D}^{ep}$ is the elasto-plastic constitutive matrix for plane stress. The generalized gradient operator $\boldsymbol{\nabla}$ is

$$\boldsymbol{\nabla} \;=\; \begin{bmatrix} \frac{\partial}{\partial x} & 0 \\ 0 & \frac{\partial}{\partial y} \\ \frac{\partial}{\partial y} & \frac{\partial}{\partial x} \end{bmatrix}$$

The element tangent stiffness matrix corresponding to this equation is

$$\mathbf{K} \;=\; \int_A \mathbf{B}^T\, \mathbf{D}^{ep}\, \mathbf{B}\; dA \;=\; \int_{-1}^{1} \int_{-1}^{1} \mathbf{B}^T\, \mathbf{D}^{ep}\, \mathbf{B}\; J\, d\xi\, d\eta$$

(ξ, η) are the normalized basic coordinates and J is the Jacobi determinant. The strain matrix $\mathbf{B}$ corresponding to the gradient operator $\boldsymbol{\nabla}$ is defined as

$$\mathbf{B} \;=\; \boldsymbol{\nabla}\mathbf{N} \;=\; \begin{bmatrix} \frac{\partial N_1}{\partial x} & 0 & \cdots & \frac{\partial N_4}{\partial x} & 0 \\ 0 & \frac{\partial N_1}{\partial y} & \cdots & 0 & \frac{\partial N_4}{\partial y} \\ \frac{\partial N_1}{\partial y} & \frac{\partial N_1}{\partial x} & \cdots & \frac{\partial N_4}{\partial y} & \frac{\partial N_4}{\partial x} \end{bmatrix}$$

where $\mathbf{N}$ is the shape function matrix. $\mathbf{B}$ is computed as

$$\mathbf{B} \;=\; \mathbf{J}^{-T} \boldsymbol{\nabla}_{\boldsymbol{\xi}} \mathbf{N}$$

$\boldsymbol{\nabla}_{\boldsymbol{\xi}}$ is the gradient matrix in terms of the basic coordinates (ξ, η) and $\mathbf{J}$ is the Jacobi matrix.

The yield condition is

$$f = \sigma_e + \varphi\,\sigma_m - (\sigma_0 + \varepsilon_p\,H)$$

with $\varphi = 0$ for von Mises materials. σ_e is the equivalent stress and σ_m is the mean stress.

If $f < 0$ the elastic stiffness is used,

$$\mathbf{D}^{ep} \;=\; \mathbf{D} \;=\; \frac{E}{1-\nu^2}\begin{bmatrix} 1 & \nu & 0 \\ \nu & 1 & 0 \\ 0 & 0 & \frac{1}{2}(1-\nu) \end{bmatrix}$$

If $f = 0$ the elasto-plastic stiffness is used,

$$\mathbf{D}^{ep} \;=\; \mathbf{D} \;-\; \frac{\mathbf{a}\,\mathbf{a}^T}{H + \mathbf{b}^T\mathbf{a}}$$

where

$$\mathbf{a} \;=\; \mathbf{D}\,\frac{\partial f}{\partial \boldsymbol{\sigma}} \;=\; \frac{E}{1-\nu^2}\frac{3}{2\,\sigma_e}\begin{bmatrix} \sigma'_x + \nu\sigma'_y \\ \nu\sigma'_x + \sigma'_y \\ (1-\nu)\sigma'_{xy} \end{bmatrix} + k\,\varphi\begin{bmatrix} 1 \\ 1 \\ 0 \end{bmatrix}$$

$$\mathbf{b} \;=\; \frac{\partial f}{\partial \boldsymbol{\sigma}} \;=\; \frac{3}{2\,\sigma_e}\begin{bmatrix} \sigma'_x \\ \sigma'_y \\ 2\sigma'_{xy} \end{bmatrix} + \frac{\varphi}{3}\begin{bmatrix} 1 \\ 1 \\ 0 \end{bmatrix}$$

$\mu = E/(2(1+\nu))$ is the shear modulus, $k = E/(3(1-\nu))$ is the bulk modulus and σ' is a deviatoric stress components. For von Mises materials where $\varphi = 0$, a simple form of the product $\mathbf{b}^T\mathbf{a}$ may be used, [1].

The integral is evaluated by 2×2 Gauss quadrature.

See Also

keq4e, keq4epe, kq4eps, qeq4eps

Reference

[1] S. Krenk: *Non-linear analysis with finite elements*, Dept. of Building Technology and Structural Engineering, Aalborg University, Denmark, 1993.

keq4p

Purpose

Creates the combined element conductivity and dissipation matrix for a 2D 4-node bilinear quadrilateral potential element.

Syntax

Ke = keq4p(Xe,Ge)

Description

Creates the combined element conductivity and dissipation matrix Ke for the 2D 4-node quadrilateral potential element with bilinear potential interpolation, the conductivity k, and the dissipation parameter b.

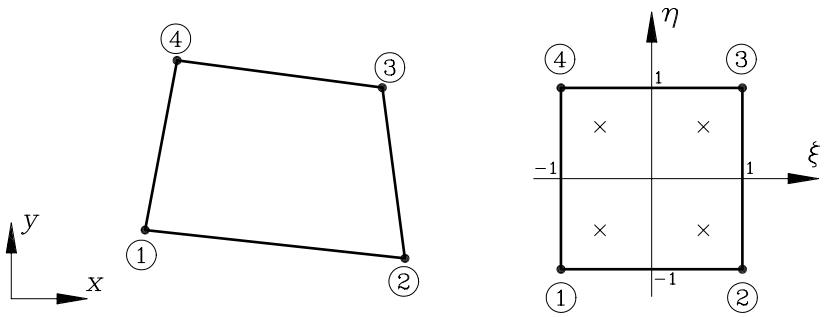

Q4P element in a) physical and b) basis plane.

The element node coordinates are passed as

$$\mathsf{Xe} = \begin{bmatrix} x_1 & y_1 \\ x_2 & y_2 \\ x_3 & y_3 \\ x_4 & y_4 \end{bmatrix}$$

The element is isotropic with parameters k, b passed as

$$\mathsf{Ge} = [k\ b] \quad \text{or} \quad \mathsf{Ge} = k$$

The element matrices corresponding to a group of elements defined by a topology matrix T may be created and assembled by a single call of the function kq4p.

Theory

The matrix represents a linear approximation to the differential equation

$$\boldsymbol{\nabla}^T \left(\mathbf{D}\, \boldsymbol{\nabla} u(x,y) \right) \; - \; b\, u(x,y) \;\; = \;\; 0 \quad , \qquad (x,y) \text{ in } A$$

where $u(x,y)$ is the potential field, $\mathbf{D}$ is the material conductivity matrix and b is the dissipation constant. The gradient operator $\boldsymbol{\nabla}$ is

$$\boldsymbol{\nabla} \;\; = \;\; \begin{bmatrix} \frac{\partial}{\partial x} \\ \frac{\partial}{\partial y} \end{bmatrix}$$

The element matrix including conductivity and dissipation corresponding to this equation is

$$\begin{aligned} \mathbf{K} \;\; &= \;\; \int_A \left(\boldsymbol{\nabla}\mathbf{N}^T\, \mathbf{D}\, \boldsymbol{\nabla}\mathbf{N} \; + \; \mathbf{N}^T\, b\, \mathbf{N} \right) dA \\ &= \;\; \int_{-1}^{1} \int_{-1}^{1} \left(\mathbf{B}^T\, \mathbf{D}\, \mathbf{B} \; + \; \mathbf{N}^T\, b\, \mathbf{N} \right) J\, d\xi\, d\eta \end{aligned}$$

(ξ, η) are the normalized basic coordinates and J is the Jacobi determinant. The shape function matrix is

$$\mathbf{N} \;\; = \;\; \begin{bmatrix} N_1 & N_2 & N_3 & N_4 \end{bmatrix}$$

The gradient matrix is defined as

$$\mathbf{B} \;\; = \;\; \boldsymbol{\nabla}\mathbf{N} \;\; = \;\; \begin{bmatrix} \frac{\partial N_1}{\partial x} & \frac{\partial N_2}{\partial x} & \frac{\partial N_3}{\partial x} & \frac{\partial N_4}{\partial x} \\ \frac{\partial N_1}{\partial y} & \frac{\partial N_2}{\partial y} & \frac{\partial N_3}{\partial y} & \frac{\partial N_4}{\partial y} \end{bmatrix}$$

and computed as

$$\mathbf{B} \;\; = \;\; \mathbf{J}^{-T} \boldsymbol{\nabla}_{\boldsymbol{\xi}} \mathbf{N}$$

$\boldsymbol{\nabla}_{\boldsymbol{\xi}}$ is the gradient operator in terms of the basic coordinates (ξ, η) and $\mathbf{J}$ is the Jacobi matrix. The material conductivity matrix for an isotropic material is

$$\mathbf{D} \;\; = \;\; \begin{bmatrix} k & 0 \\ 0 & k \end{bmatrix}$$

The integral is evaluated by 2×2 Gauss quadrature.

See Also

keq4e, kq4p, qeq4p

ket3e

Purpose

Creates the element stiffness matrix for a 2D 3-node linear triangle elastic element in plane stress or strain.

Syntax

Ke = ket3e(Xe,Ge)

Description

Creates the element stiffness matrix Ke for the 2D 3-node triangle elastic element with bilinear displacement interpolation and the elastic parameters E and ν.

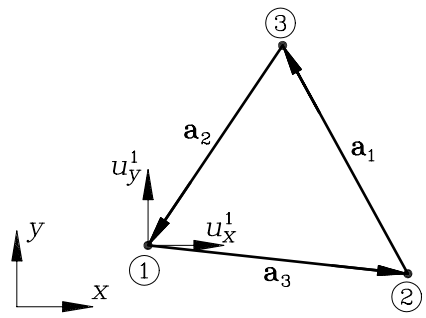

T3E element.

The element node coordinates are passed as

$$\mathsf{Xe} = \begin{bmatrix} x_1 & y_1 \\ x_2 & y_2 \\ x_3 & y_3 \end{bmatrix}$$

The elastic parameters E and ν are passed as

$$\mathsf{Ge} = [\ E \quad \nu\ ] \quad \text{or} \quad \mathsf{Ge} = [\ E \quad \nu \quad type\ ]$$

where $type = 1$ for plane stress and $type = 2$ for plane strain. Default is plane stress.

The element stiffness matrices for a group of elements defined by a topology matrix T may be created and assembled by a single call of the function kt3e.

Theory

The stiffness matrix represents a linear approximation to the differential equation

$$\boldsymbol{\nabla}^T \left(\mathbf{D}\, \boldsymbol{\nabla} \mathbf{u}(x,y) \right) \;=\; 0 \quad , \quad (x,y) \text{ in } A$$

where $\mathbf{u}^T = [u_x \; u_y]$ is the displacement vector. $\mathbf{D}$ is the elastic constitutive matrix. The generalized gradient operator $\boldsymbol{\nabla}$ is defined as

$$\boldsymbol{\nabla} \;=\; \begin{bmatrix} \frac{\partial}{\partial x} & 0 \\ 0 & \frac{\partial}{\partial y} \\ \frac{\partial}{\partial y} & \frac{\partial}{\partial x} \end{bmatrix}$$

The element stiffness matrix corresponding to this equation is

$$\mathbf{K} \;=\; \int_A \mathbf{B}^T \mathbf{D}\, \mathbf{B}\; dA \;=\; \mathbf{B}^T \mathbf{D}\, \mathbf{B}\, A$$

A is the area of the triangle. The gradient matrix is

$$\mathbf{B} \;=\; \frac{1}{2A} \begin{bmatrix} -a_{12} & 0 & -a_{22} & 0 & -a_{32} & 0 \\ 0 & a_{11} & 0 & a_{21} & 0 & a_{31} \\ a_{11} & -a_{12} & a_{21} & -a_{22} & a_{31} & -a_{32} \end{bmatrix}$$

where a_{ij} is component j of side vector $\mathbf{a}_i$. The constitutive matrix for plane stress is

$$\mathbf{D} \;=\; \frac{E}{1-\nu^2} \begin{bmatrix} 1 & \nu & 0 \\ \nu & 1 & 0 \\ 0 & 0 & \frac{1}{2}(1-\nu) \end{bmatrix}$$

and for plane strain

$$\mathbf{D} \;=\; \frac{E}{(1+\nu)(1-2\nu)} \begin{bmatrix} 1-\nu & \nu & 0 \\ \nu & 1-\nu & 0 \\ 0 & 0 & \frac{1}{2}(1-2\nu) \end{bmatrix}$$

See Also

ket3p, kt3e, qet3e

ket3p

Purpose

Creates combined element conductivity and dissipation matrix for the 2D 3-node linear triangle potential element.

Syntax

Ke = ket3p(Xe,Ge)

Description

Creates the combined element conductivity and dissipation matrix Ke for the 2D 3-node triangle potential element with linear potential interpolation, the conductivity k, and dissipation parameter b.

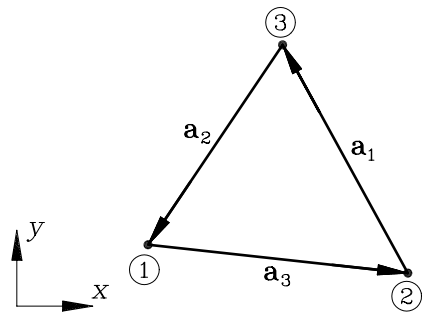

T3P element.

The element node coordinates are passed as

$$\mathsf{Xe} = \begin{bmatrix} x_1 & y_1 \\ x_2 & y_2 \\ x_3 & y_3 \end{bmatrix}$$

The element is isotropic with parameters k, b passed as

$$\mathsf{Ge} = [k\ b] \quad \text{or} \quad \mathsf{Ge} = k$$

The element matrices corresponding to a group of elements defined by a topology matrix T may be created and assembled by a single call of the function kt3p.

Theory

The matrix represents a linear approximation to the differential equation

$$\boldsymbol{\nabla}^T \left(\mathbf{D}\, \boldsymbol{\nabla} u(x,y) \right) \; - \; b\, u(x,y) \;\; = \;\; 0 \quad , \quad (x,y) \text{ in } A$$

where $u(x,y)$ is the potential field and $\mathbf{D}$ is the material conductivity matrix. The gradient operator $\boldsymbol{\nabla}$ is

$$\boldsymbol{\nabla} \;\; = \;\; \begin{bmatrix} \frac{\partial}{\partial x} \\ \frac{\partial}{\partial y} \end{bmatrix}$$

The element matrix including conductivity and dissipation corresponding to this equation is

$$\mathbf{K} \;\; = \;\; \int_A \left(\mathbf{B}^T \mathbf{D}\, \mathbf{B} \; + \; \mathbf{N}^T b\, \mathbf{N} \right) dA \;\; = \;\; \mathbf{K}_k + \mathbf{K}_b$$

As $\mathbf{B}$ and $\mathbf{D}$ are constant over element the conductivity part becomes

$$\mathbf{K}_k \;\; = \;\; \int_A \mathbf{B}^T \mathbf{D}\, \mathbf{B}\, dA \;\; = \;\; \mathbf{B}^T \mathbf{D}\, \mathbf{B}\, A$$

A is the area of the triangle. The gradient matrix is

$$\mathbf{B} \;\; = \;\; \frac{1}{2A} \begin{bmatrix} -a_{12} & -a_{22} & -a_{32} \\ a_{11} & a_{21} & a_{31} \end{bmatrix}$$

where a_{ij} is component j of side vector $\mathbf{a}_i$. The material conductivity matrix for an isotropic material is

$$\mathbf{D} \;\; = \;\; \begin{bmatrix} k & 0 \\ 0 & k \end{bmatrix}$$

Explicit integration of the dissipation part gives

$$\mathbf{K}_b \;\; = \;\; \int_A \mathbf{N}^T b\, \mathbf{N}\, dA \;\; = \;\; \frac{bA}{12} \begin{bmatrix} 2 & 1 & 1 \\ 1 & 2 & 1 \\ 1 & 1 & 2 \end{bmatrix}$$

See Also

ket3e, kt3p, qet3p

kq4e

Purpose

Driver for creating the global stiffness matrix for a group of 2D 4-node bilinear quadrilateral elastic elements in plane stress or strain using the function keq4e.

Syntax

K = kq4e(K,T,X,G)

Description

Creates the element contribution to the global stiffness matrix K for a group of 2D 4-node bilinear quadrilateral elastic elements specified by the topology matrix T. Row e in T(:,:) defines element e,

$$\mathsf{T}(e,:) \;=\; [\; node_1 \;\; \ldots \;\; node_4 \;\; PropNo \;]$$

$node_i$ are the element node numbers and $PropNo$ is the property identification number of element e. X is the global node coordinate array and G is the global material property array.

Algorithm

For element e the node coordinate array is

$$\mathsf{Xe} \;=\; \mathsf{X}(\mathsf{T}(e, 1:4), :)$$

and the element property array is

$$\mathsf{Ge} \;=\; \mathsf{G}(\mathsf{T}(e, 5), :)$$

The element stiffness matrix Ke is created by the function keq4e,

$$\mathsf{Ke} \;=\; \mathsf{keq4e}(\mathsf{Xe}, \mathsf{Ge})$$

For element e the stiffness matrix Ke is assembled into the global stiffness matrix K by the function assmk,

$$\mathsf{K} \;=\; \mathsf{assmk}(\mathsf{K}, \mathsf{Ke}, \mathsf{T}(e, :), 2)$$

where 2 is the number of degrees of freedom per node.

See Also

assmk, keq4e

kq4epe

Purpose

Driver for creating the global tangent stiffness for a group of 2D 4-node bilinear quadrilateral elements for elasto-plastic, plane strain analysis using the function keq4epe.

Syntax

K = kq4epe(K,T,X,G,S,E)

K = kq4epe(K,T,X,G,S,E,type)

Description

Creates the element contribution to the global stiffness matrix K for a group of 2D 4-node bilinear quadrilateral elements specified by the topology matrix T. Row e in T(:,:) defines element e,

$$\mathsf{T}(e,:) \;=\; [\; node_1 \;\; \ldots \;\; node_4 \;\; PropNo \;]$$

$node_i$ are the element node numbers and $PropNo$ is the property identification number of element e. X is the global node coordinate array and G is the global material property array. The global stress matrix S contains one row of stresses for each element e with the format

$$\mathsf{S}(e,:) \;=\; \Big[\; \sigma_x^1 \;\; \sigma_y^1 \;\; \sigma_z^1 \;\; \sigma_{xy}^1 \;\; \sigma_e^1 \;\; \cdots \;\; \cdots \;\; \sigma_x^4 \;\; \sigma_y^4 \;\; \sigma_z^4 \;\; \sigma_{xy}^4 \;\; \sigma_e^4 \;\Big]$$

The global strain matrix E contains one row of strains for each element e with the format

$$\mathsf{E}(e,:) \;=\; \Big[\; \varepsilon_x^1 \;\; \varepsilon_y^1 \;\; \varepsilon_z^1 \;\; 2\varepsilon_{xy}^1 \;\; \varepsilon_p^1 \;\; \cdots \;\; \cdots \;\; \varepsilon_x^4 \;\; \varepsilon_y^4 \;\; \varepsilon_z^4 \;\; 2\varepsilon_{xy}^4 \;\; \varepsilon_p^4 \;\Big]$$

Von Mises material model is used if type = 1. Associated Drucker-Prager is used if type = 2. Default is type = 1.

Algorithm

For element e the node coordinate array is

$$\mathsf{Xe} \;=\; \mathsf{X}(\mathsf{T}(e, 1:4), :)$$

and the element property array

$$\mathsf{Ge} \;=\; \mathsf{G}(\mathsf{T}(e, 5), :)$$

The element stresses and strains for element e are extracted from the global matrices and reformatted into a 4×5 matrix, i.e.

$$\begin{aligned} \mathsf{Se} &= \mathsf{reshape}(\mathsf{S}(e,:),5,4)' \\ \mathsf{Ee} &= \mathsf{reshape}(\mathsf{E}(e,:),5,4)' \end{aligned}$$

The elasto-plastic tangent stiffness matrix Ke is created by the function keq4epe,

$$\mathsf{Ke} = \mathsf{keq4epe}(\mathsf{Xe},\mathsf{Ge},\mathsf{Se},\mathsf{Ee},\mathsf{type})$$

For element e the elasto-plastic tangent stiffness matrix Ke is assembled into the global tangent stiffness matrix K by the function assmk,

$$\mathsf{K} = \mathsf{assmk}(\mathsf{K},\mathsf{Ke},\mathsf{T}(e,:),2)$$

where 2 is the number of degrees of freedom per node.

See Also

assmk, keq4epe, qeq4epe

kq4eps

Purpose

Driver for creating the global tangent stiffness for a group of 2D 4-node bilinear quadrilateral elements for elasto-plastic, plane stress analysis using the function keq4eps.

Syntax

K = kq4eps(K,T,X,G,S,E)

K = kq4eps(K,T,X,G,S,E,type)

Description

Creates the element contribution to the global stiffness matrix K for a group of 2D 4-node bilinear quadrilateral elements specified by the topology matrix T. Row e in T(:,:) defines element e,

$$\mathsf{T}(e,:) \;=\; [\; node_1 \;\; \ldots \;\; node_4 \;\; PropNo \;]$$

$node_i$ are the element node numbers and $PropNo$ is the property identification number of element e. X is the global node coordinate array and G is the global material property array. The global stress matrix S contains one row of stresses for each element e with the format

$$\mathsf{S}(e,:) \;=\; \Big[\; \sigma_x^1 \;\; \sigma_y^1 \;\; \sigma_{xy}^1 \;\; \sigma_e^1 \;\; \cdots \;\; \cdots \;\; \sigma_x^4 \;\; \sigma_y^4 \;\; \sigma_{xy}^4 \;\; \sigma_e^4 \;\Big]$$

The global strain matrix E contains one row of strains for each element e with the format

$$\mathsf{E}(e,:) \;=\; \Big[\; \varepsilon_x^1 \;\; \varepsilon_y^1 \;\; 2\varepsilon_{xy}^1 \;\; \varepsilon_p^1 \;\; \cdots \;\; \cdots \;\; \varepsilon_x^4 \;\; \varepsilon_y^4 \;\; 2\varepsilon_{xy}^4 \;\; \varepsilon_p^4 \;\Big]$$

Von Mises material model is used if type = 1. Associated Drucker-Prager is used if type = 2. Default is type = 1.

Algorithm

For element e the node coordinate array is

$$\mathsf{Xe} \;=\; \mathsf{X}(\mathsf{T}(e, 1:4), :)$$

and the element property array

$$\mathsf{Ge} \;=\; \mathsf{G}(\mathsf{T}(e, 5), :)$$

The element stresses and strains for element e are extracted from the global matrices and reformatted into 4×4 matrices, i.e.

$$\begin{aligned} \mathsf{Se} &= \mathsf{reshape}(\mathsf{S}(e,:),4,4)' \\ \mathsf{Ee} &= \mathsf{reshape}(\mathsf{E}(e,:),4,4)' \end{aligned}$$

The elasto-plastic tangent stiffness matrix Ke is created by the function keq4eps,

$$\mathsf{Ke} = \mathsf{keq4eps}(\mathsf{Xe},\mathsf{Ge},\mathsf{Se},\mathsf{Ee},\mathsf{type})$$

For element e the elasto-plastic tangent stiffness matrix Ke is assembled into the global tangent stiffness matrix K by the function assmk,

$$\mathsf{K} = \mathsf{assmk}(\mathsf{K},\mathsf{Ke},\mathsf{T}(e,:),2)$$

where 2 is the number of degrees of freedom per node.

See Also

assmk, keq4eps, qeq4eps

kq4p

Purpose

Driver for creating the combined global conductivity and dissipation matrix for a group of 2D 4-node bilinear quadrilateral potential elements using the function keq4p.

Syntax

K = kq4p(K,T,X,G)

Description

Creates the element contribution to the global stiffness matrix K for a group of 2D 4-node bilinear quadrilateral potential elements specified by the topology matrix T. Row e in T(:,:) defines element e,

$$\mathsf{T}(e,:) \quad = \quad [\ node_1 \quad \ldots \quad node_4 \quad PropNo\ ]$$

$node_i$ are the element node numbers and $PropNo$ is the property identification number of element e. X is the global node coordinate array and G is the global material property array.

Algorithm

For element e the node coordinate array is

$$\mathsf{Xe} \quad = \quad \mathsf{X}(\mathsf{T}(e, 1:4), :)$$

and the element property array is

$$\mathsf{Ge} \quad = \quad \mathsf{G}(\mathsf{T}(e, 5), :)$$

The combined element conductivity and dissipation matrix Ke is created by the function keq4p,

$$\mathsf{Ke} \quad = \quad \mathsf{keq4p}(\mathsf{Xe}, \mathsf{Ge})$$

For element e the matrix Ke is assembled into the global matrix K by the function assmk,

$$\mathsf{K} \quad = \quad \mathsf{assmk}(\mathsf{K}, \mathsf{Ke}, \mathsf{T}(e, :))$$

See Also

assmk, keq4p

kt3e

Purpose

Driver for creating the global stiffness matrix for a group of 2D 3-node linear triangle elastic elements in plane stress or strain using the function ket3e.

Syntax

$$\mathsf{K} \;=\; \mathsf{kt3e}(\mathsf{K},\mathsf{T},\mathsf{X},\mathsf{G})$$

Description

Creates the element contribution to the global stiffness matrix K for a group of 2D 3-node linear triangle elastic elements specified by the topology matrix T. Row e in T(:,:) defines element e,

$$\mathsf{T}(e,:) \;=\; [\; node_1 \quad node_2 \quad node_3 \quad PropNo \;]$$

$node_i$ are the element node numbers and $PropNo$ is the property identification number of element e. X is the global node coordinate array and G is the global material property array.

Algorithm

For element e the node coordinate array is

$$\mathsf{Xe} \;=\; \mathsf{X}(\mathsf{T}(e,1:3),:)$$

and the element property array is

$$\mathsf{Ge} \;=\; \mathsf{G}(\mathsf{T}(e,4),:)$$

The element stiffness matrix Ke is created by the function ket3e,

$$\mathsf{Ke} \;=\; \mathsf{ket3e}(\mathsf{Xe},\mathsf{Ge})$$

For element e the stiffness matrix Ke is assembled into the global stiffness matrix K by the function assmk,

$$\mathsf{K} \;=\; \mathsf{assmk}(\mathsf{K},\mathsf{Ke},\mathsf{T}(e,:),2)$$

where 2 is the number of degrees of freedom per node.

See Also

assmk, ket3e

kt3p

Purpose

Driver for creating the combined global conductivity and dissipation matrix for a group of 2D 3-node linear triangle potential elements using the function ket3p.

Syntax

K = kt3p(K,T,X,G)

Description

Creates the element contribution to the global stiffness matrix K for a group of 2D 3-node linear triangle potential elements specified by the topology matrix T. Row e in T(:,:) defines element e,

$$\mathsf{T}(e,:) \quad = \quad [\ node_1 \quad node_2 \quad node_3 \quad PropNo\ ]$$

$node_i$ are the element node numbers and $PropNo$ is the property identification number of element e. X is the global node coordinate array and G is the global material property array.

Algorithm

For element e the node coordinate array is

$$\mathsf{Xe} \quad = \quad \mathsf{X}(\mathsf{T}(e, 1:3), :)$$

and the element property array is

$$\mathsf{Ge} \quad = \quad \mathsf{G}(\mathsf{T}(e, 4), :)$$

The combined element conductivity and dissipation matrix Ke is created by the function ket3p,

$$\mathsf{Ke} \quad = \quad \mathsf{ket3p}(\mathsf{Xe}, \mathsf{Ge})$$

For element e the matrix Ke is assembled into the global matrix K by the function assmk,

$$\mathsf{K} \quad = \quad \mathsf{assmk}(\mathsf{K}, \mathsf{Ke}, \mathsf{T}(e, :))$$

See Also

assmk, ket3p

plotelem

Purpose

Plots elements given by a topology matrix and a coordinate matrix.

Syntax

plotelem(T,X)

plotelem(T,X,'linetype')

Description

Plots the contours of elements defined by the topology matrix T using the MATLAB function plot. The row e of T(:,:) defines the nodes of the element in the format

$$\mathsf{T}(e,:) \quad = \quad [\ \underbrace{node_1 \quad \ldots \quad node_{ne}}_{\text{global node numbers}} \quad PropNo\ ]$$

The node coordinates are given in the matrix X(:,:) with each row n defining the coordinate set,

$$\mathsf{X}(n,:) \quad = \quad \underbrace{[\ x_n \quad y_n\ ]}_{\text{coordinates of node } n}$$

The string parameter 'linetype' may be used to specify the type and color of the line according to the rules used in the function plot.

Examples

The function call plotelem(T,X,'y-') will plot the element contours with a full (-) yellow (y) line, while plotelem(T,X,'g:') will produce the plot with a dotted (:) green (g) line. Different line types may be useful when plotting undeformed and deformed geometries in the same plot.

See Also

plot

plotq4

Purpose

Plots stress or strain distribution contours of q4 elements.

Syntax

plotq4(T,X,S,comp)

Description

Plots the stress or strain distribution contours of component No. comp of 2D q4 elements defined by the topology matrix T. Each row in T represents one element and has the format

$$\mathsf{T}(e,:) \quad = \quad [\ node_1 \quad \ldots \quad node_{ne} \quad PropNo\ ]$$

$node_i$ are the element node numbers and $PropNo$ is the property identification. The node coordinates are given in the matrix X with each row defining the coordinates of node n,

$$\mathsf{X}(n,:) \quad = \quad [\ x_n \quad y_n\ ]$$

The stress or strain matrix S has the format

$$\mathsf{S}(e,:) \quad = \quad [\ \sigma_1^1 \quad \cdots \quad \sigma_{nc}^1 \qquad \cdots \qquad \sigma_1^4 \quad \cdots \quad \sigma_{nc}^4\ ]$$

where nc is the number of stress or strain components stored in each of the 4 Gauss points.

Algorithm

For element e the requested component may be extracted from the global array as

$$\mathsf{s}(e,1:4) \quad = \quad \mathsf{S}(e,((1:4)-1)*\mathsf{ncomp}+\mathsf{comp})$$

where 4 is the number of Gauss points. These values are extrapolated to the element nodes using the element shape functions. Then a closed patch is defined for each element where each node is assigned with a nodal stress or strain intensity. These patches are plotted by the MATLAB system function patch.

Examples

The function call plotq4(T,X,S,1) will plot the contours of stress component No. 1.

See Also

patch, plott3

plott3

Purpose

Plots stress or strain distribution contours of t3 elements.

Syntax

plott3(T,X,S,comp)

Description

Plots the stress or strain distribution contours of component No. comp of 2D t3 elements defined by the topology matrix T. Each row in T represents one element and has the format

$$\mathsf{T}(e,:) \quad = \quad [\ node_1 \quad \ldots \quad node_{ne} \quad PropNo\ ]$$

$node_i$ are the element node numbers and $PropNo$ is the property identification. The node coordinates are given in the matrix X with each row defining the coordinates of node n,

$$\mathsf{X}(n,:) \quad = \quad [\ x_n \quad y_n\ ]$$

The stress or strain matrix S has the format

$$\mathsf{S}(e,:) \quad = \quad [\ \sigma_1^1 \quad \sigma_2^1 \quad \cdots \quad \sigma_{nc}^1\ ]$$

where nc is the number of stress or strain components.

Algorithm

For element e the requested component may be extracted from the global array as

$$\mathsf{s}(e) \quad = \quad \mathsf{S}(e, \mathsf{comp})$$

A closed patch is defined for each element where each node is assigned with a nodal stress or strain intensity. These patches are plotted by the MATLAB system function patch.

Examples

The function call plott3(T,X,S,2) will plot the contours of stress component No. 2.

See Also

patch, plotq4

plotu

Purpose

Plots contours of nodal intensities.

Syntax

plotu(T,X,u)

Description

Plots contours of a nodal value, e.g. a potential or a displacement component, for elements defined by the topology matrix T using the MATLAB function patch. Each row in T represents one element and has the format

$$\mathsf{T}(e,:) \quad = \quad [\ node_1 \quad \ldots \quad node_{ne} \quad PropNo\ ]$$

$node_i$ are the element node numbers and $PropNo$ is the property identification. The node coordinates are given in the matrix X with each row defining the coordinates of node n,

$$\mathsf{X}(n,:) \quad = \quad [\ x_n \quad y_n\ ]$$

The nodal value vector u has the format

$$\mathsf{u} \quad = \quad \begin{bmatrix} u_1 \\ \vdots \\ u_n \end{bmatrix}$$

where n is the number of nodes.

See Also

patch, plotelem

qbar

Purpose

Driver for creating the global internal force vector, the stress matrix and the strain matrix for a group of 2-node elastic bar elements with linear or non-linear strain measure using the function qebar.

Syntax

[q,S,E] = qbar(q,T,X,G,u)

Description

Creates the element contribution to the global internal force vector q, the global stress matrix S and the global strain matrix E for a group of 2-node elastic bar elements specified by the topology matrix T. Row e in T(:,:) defines element e,

$$\mathsf{T}(e,:) \quad = \quad [\ node_1 \quad node_2 \quad PropNo\ ]$$

$node_i$ are the element node numbers and $PropNo$ is the property identification number of element e. X is the current node coordinate array and G is the material property array. The total node displacements $(u_x, u_y, (u_z))$ are passed as

$$\mathsf{u} \quad = \quad [\ \begin{array}{c} u_x^1 \\ u_y^1 \\ (u_z^1) \\ \vdots \\ u_x^n \\ u_y^n \\ (u_z^n) \end{array}\ ]$$

where n is the total number of nodes.

Algorithm

The coordinates of the deformed bar is obtained from the initial geometry X and the global displacement vector u,

$$\mathsf{X1} \;=\; \mathsf{X} \;+\; \mathsf{reshape}(\mathsf{u}, \mathsf{cols}(\mathsf{X}), \mathsf{rows}(\mathsf{X}))'$$

The element coordinate arrays are

$$\begin{aligned} \mathsf{Xe0} &= \mathsf{X}(\mathsf{T}(e, 1:2), :) \\ \mathsf{Xe1} &= \mathsf{X1}(\mathsf{T}(e, 1:2), :) \end{aligned}$$

The element property array is

$$\mathsf{Ge} \quad = \quad \mathsf{G}(\mathsf{T}(e,3),:)$$

The element internal force vector qe is created by the function qebar,

$$[\mathsf{qe}, \mathsf{Se}, \mathsf{Ee}] \quad = \quad \mathsf{qebar}(\mathsf{Xe0}, \mathsf{Xe1}, \mathsf{Ge})$$

This function also returns the element stress Se and strain Ee.

For element e the internal force vector qe is assembled into the global internal force vector q by the function assmq,

$$\mathsf{q} \quad = \quad \mathsf{assmq}(\mathsf{q}, \mathsf{qe}, \mathsf{T}(e,:), \mathsf{dof})$$

The number of degrees of freedom is equal to the spatial dimension, dof = cols(X). The stress and strain are assigned as

$$\begin{aligned} \mathsf{S}(e,1) &= \mathsf{Se} \\ \mathsf{E}(e,1) &= \mathsf{Ee} \end{aligned}$$

See Also

assmq, qebar

qebar

Purpose

Creates the internal force vector, the axial stress and strain of a 2-node elastic bar element with linear or non-linear strain measure.

Syntax

[qe,Se,Ee] = qebar(Xe0,Xe1,Ge)

Description

Creates the internal force vector qe, the element axial stress Se $= \sigma$, and the element Green strain Ee $= \varepsilon_G$ of a 2-node elastic bar element. The function returns the element internal force vector in the format

$$\mathsf{qe} = \begin{bmatrix} q_x^1 \\ q_y^1 \\ (q_z^1) \\ q_x^2 \\ q_y^2 \\ (q_z^2) \end{bmatrix}$$

The element node coordinates of the initial geometry Xe0 and updated geometry Xe1 are passed in the format

$$\mathsf{Xe} = \begin{bmatrix} x_1 & y_1 & (z_1) \\ x_2 & y_2 & (z_2) \end{bmatrix}$$

The cross section area A and Young's modulus E are passed as

$$\mathsf{Ge} = [\ A \quad E\ ] \quad \text{or} \quad \mathsf{Ge} = [\ AE\ ]$$

The element vectors and matrices for a group of elements defined by a topology matrix T may be created and assembled by a single call of the function qbar.

Theory

The internal force vector is derived from the Green strain,

$$\varepsilon_G = \frac{l_1^2 - l_0^2}{2l_0^2} = \frac{\mathbf{a}_1^T\mathbf{a}_1 - \mathbf{a}_0^T\mathbf{a}_0}{2\mathbf{a}_0^T\mathbf{a}_0}$$

where l_0 and l_1 are the length of the undeformed and the deformed bar, respectively. $\mathbf{a}_0$ and $\mathbf{a}_1$ are the corresponding element vectors, see kebar.

The conjugate axial force is

$$N \;=\; A\,\sigma \;=\; EA\,\varepsilon_G$$

The nodal internal forces act in the direction of the deformed bar

$$\begin{bmatrix} \mathbf{q}_1 \\ \mathbf{q}_2 \end{bmatrix} \;=\; \frac{N}{l_0} \begin{bmatrix} -\mathbf{a}_1 \\ \mathbf{a}_1 \end{bmatrix}$$

where $\mathbf{q}_1$ and $\mathbf{q}_2$ are the two end force vectors balancing the external forces $\mathbf{p}_1$ and $\mathbf{p}_2$, see kebar.

See Also

kebar, qbar

qeq4e

Purpose

Creates the internal force vector, the stress and strain matrices of a 2D 4-node bilinear quadrilateral elastic element in plane stress or strain.

Syntax

[qe,Se,Ee] = qeq4e(Xe,Ge,Ue)

Description

Creates the internal force vector qe, the element stress Se, and the element strain Ee of a 4-node bilinear quadrilateral elastic element. The function returns the internal force vector

$$\mathsf{qe} = \begin{bmatrix} q_x^1 \\ q_y^1 \\ \vdots \\ q_x^4 \\ q_y^4 \end{bmatrix}$$

and the element stress and strain matrices

$$\mathsf{Se} = \begin{bmatrix} \sigma_x^1 & \sigma_y^1 & \sigma_{xy}^1 \\ \sigma_x^2 & \sigma_y^2 & \sigma_{xy}^2 \\ \sigma_x^3 & \sigma_y^3 & \sigma_{xy}^3 \\ \sigma_x^4 & \sigma_y^4 & \sigma_{xy}^4 \end{bmatrix} \qquad \mathsf{Ee} = \begin{bmatrix} \varepsilon_x^1 & \varepsilon_y^1 & 2\varepsilon_{xy}^1 \\ \varepsilon_x^2 & \varepsilon_y^2 & 2\varepsilon_{xy}^2 \\ \varepsilon_x^3 & \varepsilon_y^3 & 2\varepsilon_{xy}^3 \\ \varepsilon_x^4 & \varepsilon_y^4 & 2\varepsilon_{xy}^4 \end{bmatrix}$$

The element node coordinates are passed as

$$\mathsf{Xe} = \begin{bmatrix} x_1 & y_1 \\ x_2 & y_2 \\ x_3 & y_3 \\ x_4 & y_4 \end{bmatrix}$$

The elastic parameters, E and ν, are passed as

$$\mathsf{Ge} = [\ E \quad \nu\ ] \quad \text{or} \quad \mathsf{Ge} = [\ E \quad \nu \quad type\ ]$$

where $type = 1$ for plane stress and $type = 2$ for plane strain. Default is plane stress. The element displacements are passed as

$$\mathsf{Ue} = \begin{bmatrix} u_x^1 \\ u_y^1 \\ \vdots \\ u_x^4 \\ u_y^4 \end{bmatrix}$$

The element vectors and matrices for a group of elements defined by a topology matrix T may be created and assembled by a single call of the function qq4e.

Theory

The internal force vector is found by integration of the stress $\boldsymbol{\sigma}$ over the element, i.e.

$$\mathbf{q} \;=\; \int_A \mathbf{B}^T \boldsymbol{\sigma}\, dA \;=\; \int_{-1}^{1}\int_{-1}^{1} \mathbf{B}^T \boldsymbol{\sigma}\, J\, d\xi\, d\eta$$

(ξ, η) are the normalized basic coordinates, J is the Jacobi determinant and $\mathbf{B}$ is the generalized gradient matrix, see keq4e. The stress $\boldsymbol{\sigma}$ is obtained from the strain $\boldsymbol{\varepsilon}$, i.e.

$$\boldsymbol{\varepsilon} \;=\; \mathbf{B}\,\mathbf{u} \qquad , \qquad \boldsymbol{\sigma} \;=\; \mathbf{D}\,\boldsymbol{\varepsilon}$$

The constitutive matrix $\mathbf{D}$ for plane stress is

$$\mathbf{D} \;=\; \frac{E}{1-\nu^2}\begin{bmatrix} 1 & \nu & 0 \\ \nu & 1 & 0 \\ 0 & 0 & \frac{1}{2}(1-\nu) \end{bmatrix}$$

and for plane strain

$$\mathbf{D} \;=\; \frac{E}{(1+\nu)(1-2\nu)}\begin{bmatrix} 1-\nu & \nu & 0 \\ \nu & 1-\nu & 0 \\ 0 & 0 & \frac{1}{2}(1-2\nu) \end{bmatrix}$$

The integral is evaluated by 2×2 Gauss quadrature.

See Also

keq4e, qeq4p, qq4e

qeq4epe

Purpose

Creates the internal force vector of a 2D 4-node quadrilateral bilinear element for elasto-plastic, plane strain analysis. The material model is von Mises or associated Drucker-Prager with linear isotropic hardening.

Syntax

```
[qe,Sen,Een] = qeq4epe(Xe,Ge,Ue,Se,Ee)
[qe,Sen,Een] = qeq4epe(Xe,Ge,Ue,Se,Ee,type)
```

Description

Creates the internal force vector qe, the updated element stress Sen, and the updated element strain Een of a quadrilateral bilinear continuum element for elasto-plastic, plane strain analysis. The function returns the internal force vector

$$\mathsf{qe} = \begin{bmatrix} q_x^1 \\ q_y^1 \\ \vdots \\ q_x^4 \\ q_y^4 \end{bmatrix}$$

and the updated stress and strain matrices

$$\mathsf{Sen} = \begin{bmatrix} \sigma_x^1 & \sigma_y^1 & \sigma_z^1 & \sigma_{xy}^1 & \sigma_e^1 \\ \sigma_x^2 & \sigma_y^2 & \sigma_z^2 & \sigma_{xy}^2 & \sigma_e^2 \\ \sigma_x^3 & \sigma_y^3 & \sigma_z^3 & \sigma_{xy}^3 & \sigma_e^3 \\ \sigma_x^4 & \sigma_y^4 & \sigma_z^4 & \sigma_{xy}^4 & \sigma_e^4 \end{bmatrix}$$

$$\mathsf{Een} = \begin{bmatrix} \varepsilon_x^1 & \varepsilon_y^1 & \varepsilon_z^1 & 2\varepsilon_{xy}^1 & \varepsilon_p^1 \\ \varepsilon_x^2 & \varepsilon_y^2 & \varepsilon_z^2 & 2\varepsilon_{xy}^2 & \varepsilon_p^2 \\ \varepsilon_x^3 & \varepsilon_y^3 & \varepsilon_z^3 & 2\varepsilon_{xy}^3 & \varepsilon_p^3 \\ \varepsilon_x^4 & \varepsilon_y^4 & \varepsilon_z^4 & 2\varepsilon_{xy}^4 & \varepsilon_p^4 \end{bmatrix}$$

σ_e is the equivalent stress (von Mises) and ε_p is the total equivalent plastic strain.

The element node coordinates are passed as

$$\mathsf{Xe} = \begin{bmatrix} x_1 & y_1 \\ x_2 & y_2 \\ x_3 & y_3 \\ x_4 & y_4 \end{bmatrix}$$

The element material parameters E, ν, σ_0, H, φ are passed as

$$\mathsf{Ge} \;=\; [\; E \quad \nu \quad \sigma_0 \quad H \quad \varphi \;]$$

The element displacements are passed as

$$\mathsf{Ue} \;=\; [\; \begin{matrix} u_x^1 \\ u_y^1 \\ \vdots \\ u_x^4 \\ u_y^4 \end{matrix} \;]$$

The current state of stress and strain of each element integration point is stored in the matrices Se and Ee with the same format as Sen and Een, respectively.

Von Mises material model is used if type = 1. Associated Drucker-Prager is used if type = 2. Default is type = 1.

The element matrices corresponding to a group of elements defined by a topology matrix T may be created and assembled by a single call of the function qq4epe.

Theory

The stress in a Gauss point is integrated with the radial return algorithm, i.e. by evaluating an elastic predictor and a plastic corrector. The elastic predictor is defined as

$$\boldsymbol{\sigma}^* \;=\; \boldsymbol{\sigma}_0 \;+\; \Delta\boldsymbol{\sigma}^e \;=\; \boldsymbol{\sigma}_0 \;+\; \mathbf{D}\,\Delta\boldsymbol{\varepsilon}$$

where $\boldsymbol{\sigma}_0$ is the stress at the previous equilibrium state and $\mathbf{D}$ is the elastic stiffness,

$$\mathbf{D} \;=\; \frac{E}{(1+\nu)(1-2\nu)} \begin{bmatrix} 1-\nu & \nu & \nu & 0 \\ \nu & 1-\nu & \nu & 0 \\ \nu & \nu & 1-\nu & 0 \\ 0 & 0 & 0 & \frac{1}{2}(1-2\nu) \end{bmatrix}$$

The strain increment is obtained as

$$\Delta\boldsymbol{\varepsilon} \;=\; \boldsymbol{\varepsilon} \;-\; \boldsymbol{\varepsilon}_0 \;=\; \bar{\mathbf{B}}\,\mathbf{u} \;-\; \boldsymbol{\varepsilon}_0$$

Here the modified strain matrix $\bar{\mathbf{B}}$ is used, see keq4epe.

The yield condition is

$$f \;=\; \sigma_e(\boldsymbol{\sigma}) \;+\; \varphi\,\sigma_m \;-\; (\sigma_0 + \varepsilon_p\,H) \;\leq\; 0$$

with $\varphi = 0$ for von Mises materials. σ_m is the mean stress and the equivalent stress σ_e for plane strain is defined as

$$\sigma_e^2 \;=\; \tfrac{1}{2}\Big((\sigma_x - \sigma_y)^2 + (\sigma_y - \sigma_z)^2 + (\sigma_z - \sigma_x)^2\Big) + 3\sigma_{xy}^2$$

If $f(\boldsymbol{\sigma}^*) < 0$ the updated stress becomes $\boldsymbol{\sigma} = \boldsymbol{\sigma}^*$. If $f(\boldsymbol{\sigma}^*) > 0$ a plastic corrector is evaluated,

$$\Delta\boldsymbol{\sigma}^p \;=\; \Delta\lambda\left[3\mu\,\frac{\boldsymbol{\sigma}^{*\prime}}{\sigma_e^*} + k\,\varphi\,\mathbf{m}_p\right]$$

$$\Delta\lambda \;=\; \frac{f(\boldsymbol{\sigma}^*)}{H + 3\mu + k\varphi^2}$$

$\Delta\lambda$ is the plastic multiplier, $\mu = E/(2(1+\nu))$ is the shear modulus, $k = E/(3(1-\nu))$ is the bulk modulus and $\boldsymbol{\sigma}'$ is the deviatoric part of the stress vector. The last term is evaluated if $\varphi \neq 0$ with $\mathbf{m}_p^T = [\,1\;1\;1\;0\,]$ giving the direction of the hydrostatic part of the plastic strain increment. The updated stress becomes

$$\boldsymbol{\sigma} \;=\; \boldsymbol{\sigma}^* \;-\; \Delta\boldsymbol{\sigma}^p$$

The hardening is described in terms of the total equivalent plastic strain, which is defined as, [1],

$$\varepsilon_p \;=\; \int d\epsilon_p \;=\; \int d\lambda$$

The internal force vector is found by integration of the stress over the element, i.e.

$$\mathbf{q} \;=\; \int_A \bar{\mathbf{B}}^T\,\boldsymbol{\sigma}\,dA \;=\; \int_{-1}^{1}\int_{-1}^{1} \bar{\mathbf{B}}^T\,\boldsymbol{\sigma}\,J\,d\xi\,d\eta$$

(ξ, η) are the normalized basic coordinates and J is the Jacobi determinant. The integral is evaluated by 2×2 Gauss quadrature.

See Also

keq4epe, qeq4e, qeq4eps, qq4epe

Reference

[1] S. Krenk: *Non-linear analysis with finite elements*, Dept. of Building Technology and Structural Engineering, Aalborg University, Denmark, 1993.

qeq4eps

Purpose

Creates the internal force vector of a 2D 4-node quadrilateral bilinear element for elasto-plastic, plane stress analysis. The material model is von Mises or associated Drucker-Prager with linear isotropic hardening.

Syntax

```
[qe,Sen,Een] = qeq4eps(Xe,Ge,Ue,Se,Ee)
[qe,Sen,Een] = qeq4eps(Xe,Ge,Ue,Se,Ee,type)
```

Description

Creates the internal force vector qe, the updated element stress Sen, and the updated element strain Een of a quadrilateral bilinear continuum element for elasto-plastic, plane stress analysis. The function returns the internal force vector

$$\mathsf{qe} = \begin{bmatrix} q_x^1 \\ q_y^1 \\ \vdots \\ q_x^4 \\ q_y^4 \end{bmatrix}$$

and the updated stress and strain matrices

$$\mathsf{Sen} = \begin{bmatrix} \sigma_x^1 & \sigma_y^1 & \sigma_{xy}^1 & \sigma_e^1 \\ \sigma_x^2 & \sigma_y^2 & \sigma_{xy}^2 & \sigma_e^2 \\ \sigma_x^3 & \sigma_y^3 & \sigma_{xy}^3 & \sigma_e^3 \\ \sigma_x^4 & \sigma_y^4 & \sigma_{xy}^4 & \sigma_e^4 \end{bmatrix}$$

$$\mathsf{Een} = \begin{bmatrix} \varepsilon_x^1 & \varepsilon_y^1 & 2\varepsilon_{xy}^1 & \varepsilon_p^1 \\ \varepsilon_x^2 & \varepsilon_y^2 & 2\varepsilon_{xy}^2 & \varepsilon_p^2 \\ \varepsilon_x^3 & \varepsilon_y^3 & 2\varepsilon_{xy}^3 & \varepsilon_p^3 \\ \varepsilon_x^4 & \varepsilon_y^4 & 2\varepsilon_{xy}^4 & \varepsilon_p^4 \end{bmatrix}$$

σ_e is the equivalent stress and ε_p is the total equivalent plastic strain.

The element node coordinates are passed as

$$\mathsf{Xe} = \begin{bmatrix} x_1 & y_1 \\ x_2 & y_2 \\ x_3 & y_3 \\ x_4 & y_4 \end{bmatrix}$$

The element material parameters E, ν, σ_0, H, φ are passed as

$$\mathsf{Ge} \;=\; [\; E \quad \nu \quad \sigma_0 \quad H \quad \varphi \;]$$

The element displacements are passed as

$$\mathsf{Ue} \;=\; [\; \begin{array}{l} u_x^1 \\ u_y^1 \\ \vdots \\ u_x^4 \\ u_y^4 \end{array} \;]$$

The current state of stress and strain of each element integration point is stored in the matrices Se and Ee with the same format as Sen and Een, respectively.

Von Mises material model is used if type = 1. Associated Drucker-Prager is used if type = 2. Default is type = 1.

The element matrices corresponding to a group of elements defined by a topology matrix T may be created and assembled by a single call of the function qq4eps.

Theory

The stress in a Gauss point is obtained by integration. For von Mises materials the stress increment is determined using the radial return algorithm, i.e. by evaluating an elastic predictor and a plastic corrector, [1]. For Drucker-Prager materials a backward Euler scheme with an elastic predictor as starting point is used,[2]. The elastic predictor is defined as

$$\boldsymbol{\sigma}^* \;=\; \boldsymbol{\sigma}_0 \;+\; \Delta\boldsymbol{\sigma}^e \;=\; \boldsymbol{\sigma}_0 \;+\; \mathbf{D}\,\Delta\boldsymbol{\varepsilon}$$

where $\boldsymbol{\sigma}_0$ is the stress at the previous equilibrium state and $\mathbf{D}$ is the elastic stiffness,

$$\mathbf{D} \;=\; \frac{E}{1-\nu^2}\begin{bmatrix} 1 & \nu & 0 \\ \nu & 1 & 0 \\ 0 & 0 & \frac{1}{2}(1-\nu) \end{bmatrix}$$

The strain increment is obtained as

$$\Delta\boldsymbol{\varepsilon} \;=\; \boldsymbol{\varepsilon} \;-\; \boldsymbol{\varepsilon}_0 \;=\; \mathbf{B}\,\mathbf{u} \;-\; \boldsymbol{\varepsilon}_0$$

The yield condition is

$$f \;=\; \sigma_e(\boldsymbol{\sigma}) \;+\; \varphi\,\sigma_m \;-\; (\sigma_0 + \varepsilon_p\,H) \;\leq\; 0$$

with $\varphi = 0$ for von Mises materials. σ_m is the mean stress and the equivalent stress σ_e for plane stress is defined as

$$\sigma_e^2 \;=\; \sigma_x^2 + \sigma_y^2 - \sigma_x\sigma_y + 3\sigma_{xy}^2$$

If $f(\boldsymbol{\sigma}^*) < 0$ the updated stress becomes $\boldsymbol{\sigma} = \boldsymbol{\sigma}^*$. If $f(\boldsymbol{\sigma}^*) > 0$ a plastic corrector $\Delta\boldsymbol{\sigma}^p$ and multiplier $\Delta\lambda$ are evaluated using Newton-Raphson iterations. For von Mises materials the direction of the plastic corrector is known, but the scaling factor $\Delta\lambda$ must be obtained solving a non-linear equation, [1]. For Drucker-Prager materials both the direction and scaling factor is obtained iteratively using Newton-Raphson iterations with $\boldsymbol{\sigma}^*$ as starting point, [2]. The updated stress becomes

$$\boldsymbol{\sigma} \;=\; \boldsymbol{\sigma}^* \;-\; \Delta\boldsymbol{\sigma}^p$$

The hardening is described in terms of the total equivalent plastic strain, which is defined as, [2],

$$\varepsilon_p \;=\; \int d\epsilon_p \;=\; \int d\lambda$$

The internal force vector is found by integration of the stress over the element, i.e.

$$\mathbf{q} \;=\; \int_A \mathbf{B}^T\,\boldsymbol{\sigma}\,dA \;=\; \int_{-1}^{1}\int_{-1}^{1} \mathbf{B}^T\,\boldsymbol{\sigma}\,J\,d\xi\,d\eta$$

(ξ, η) are the normalized basic coordinates and J is the Jacobi determinant.

The integral is evaluated by 2×2 Gauss quadrature.

See Also

keq4eps, qeq4e, qeq4epe, qq4eps

Reference

[1] P. Jetteur: Implicit integration algorithm for elastoplasticity in plane stress analysis, *Engineering Computations*, Vol. 3, pp. 251-253, 1986.

[2] S. Krenk: *Non-linear analysis with finite elements*, Dept. of Building Technology and Structural Engineering, Aalborg University, Denmark, 1993.

qeq4p

Purpose

Creates the internal force vector of a 2D 4-node bilinear quadrilateral potential element.

Syntax

[qe,Se,Ee] = qeq4p(Xe,Ge,Ue)

Description

Creates the internal force vector, the element flux Se, and the element gradient Ee of a 2D 4-node quadrilateral bilinear potential element. The function returns the element internal force vector

$$\mathsf{qe} = \begin{bmatrix} q^1 \\ q^2 \\ q^3 \\ q^4 \end{bmatrix}$$

and the element flux and gradient matrices

$$\mathsf{Se} = \begin{bmatrix} \sigma_x^1 & \sigma_y^1 \\ \sigma_x^2 & \sigma_y^2 \\ \sigma_x^3 & \sigma_y^3 \\ \sigma_x^4 & \sigma_y^4 \end{bmatrix} \qquad \mathsf{Ee} = \begin{bmatrix} \varepsilon_x^1 & \varepsilon_y^1 \\ \varepsilon_x^2 & \varepsilon_y^2 \\ \varepsilon_x^3 & \varepsilon_y^3 \\ \varepsilon_x^4 & \varepsilon_y^4 \end{bmatrix}$$

The element node coordinates are passed as

$$\mathsf{Xe} = \begin{bmatrix} x_1 & y_1 \\ x_2 & y_2 \\ x_3 & y_3 \\ x_4 & y_4 \end{bmatrix}$$

The element property array, Ge, has the conductivity constant k as first element. The element potentials are passed as

$$\mathsf{Ue} = \begin{bmatrix} u^1 \\ u^2 \\ u^3 \\ u^4 \end{bmatrix}$$

The element matrices corresponding to a group of elements defined by a topology matrix T may be created and assembled by a single call of the function qq4p.

Theory

The internal force vector is found by integration of the flux $\boldsymbol{\sigma}$ over the element, i.e.

$$\mathbf{q} \;=\; \int_A \mathbf{B}^T \boldsymbol{\sigma}\, dA \;=\; \int_{-1}^{1}\int_{-1}^{1} \mathbf{B}^T \boldsymbol{\sigma}\, J\, d\xi\, d\eta$$

(ξ, η) are the normalized basic coordinates, J is the Jacobi determinant and $\mathbf{B}$ is the gradient matrix, see keq4p. The flux $\boldsymbol{\sigma}$ is obtained from the gradient $\boldsymbol{\varepsilon}$,

$$\boldsymbol{\varepsilon} \;=\; \mathbf{B}\,\mathbf{u} \qquad , \qquad \boldsymbol{\sigma} \;=\; \mathbf{D}\,\boldsymbol{\varepsilon}$$

The material conductivity matrix $\mathbf{D}$ is isotropic and has the form

$$\mathbf{D} \;=\; \begin{bmatrix} k & 0 \\ 0 & k \end{bmatrix}$$

The integral is evaluated by 2×2 Gauss quadrature.

See Also

keq4p, qeq4e, qq4p

qet3e

Purpose

Creates the internal force vector, the stress and strain matrices of a 2D 3-node linear triangle elastic element in plane stress or strain.

Syntax

[qe,Se,Ee] = qet3e(Xe,Ge,Ue)

Description

Creates the internal force vector qe, the element stress Se, and the element strain Ee of a 3-node linear triangle elastic element. The function returns the element internal force vector

$$\mathsf{qe} = \begin{bmatrix} q_x^1 \\ q_y^1 \\ \vdots \\ q_x^3 \\ q_y^3 \end{bmatrix}$$

and the element stress and strain matrices

$$\mathsf{Se} = \begin{bmatrix} \sigma_x & \sigma_y & \sigma_{xy} \end{bmatrix} \qquad \mathsf{Ee} = \begin{bmatrix} \varepsilon_x & \varepsilon_y & 2\varepsilon_{xy} \end{bmatrix}$$

The element node coordinates are passed as

$$\mathsf{Xe} = \begin{bmatrix} x_1 & y_1 \\ x_2 & y_2 \\ x_3 & y_3 \end{bmatrix}$$

The elastic parameters E and ν are passed as

$$\mathsf{Ge} = \begin{bmatrix} E & \nu \end{bmatrix} \quad \text{or} \quad \mathsf{Ge} = \begin{bmatrix} E & \nu & type \end{bmatrix}$$

where $type = 1$ for plane stress and $type = 2$ for plane strain. Default is plane stress. The element displacements are passed as

$$\mathsf{Ue} = \begin{bmatrix} u_x^1 \\ u_y^1 \\ \vdots \\ u_x^3 \\ u_y^3 \end{bmatrix}$$

The element vectors and matrices for a group of elements defined by a topology matrix T may be created and assembled by a single call of the function qt3e.

Theory

The internal force vector is found by integration of the stress $\boldsymbol{\sigma}$ over the element, i.e.

$$\mathbf{q} \;=\; \int_A \mathbf{B}^T \boldsymbol{\sigma}\, dA \;=\; \mathbf{B}^T \boldsymbol{\sigma}\, A$$

A is the area of the triangle and $\mathbf{B}$ is the generalized gradient matrix, see ket3e. The stress $\boldsymbol{\sigma}$ is obtained from the strain $\boldsymbol{\varepsilon}$, i.e.

$$\boldsymbol{\varepsilon} \;=\; \mathbf{B}\,\mathbf{u} \qquad , \qquad \boldsymbol{\sigma} \;=\; \mathbf{D}\,\boldsymbol{\varepsilon}$$

The constitutive matrix $\mathbf{D}$ for plane stress is

$$\mathbf{D} \;=\; \frac{E}{1-\nu^2} \begin{bmatrix} 1 & \nu & 0 \\ \nu & 1 & 0 \\ 0 & 0 & \frac{1}{2}(1-\nu) \end{bmatrix}$$

and for plane strain

$$\mathbf{D} \;=\; \frac{E}{(1+\nu)(1-2\nu)} \begin{bmatrix} 1-\nu & \nu & 0 \\ \nu & 1-\nu & 0 \\ 0 & 0 & \frac{1}{2}(1-2\nu) \end{bmatrix}$$

See Also

ket3e, qeq4e, qet3p, qt3e

qet3p

Purpose

Creates the element internal force vector of a 2D 3-node linear triangle potential element.

Syntax

[qe,Se,Ee] = qet3p(Xe,Ge,Ue)

Description

Creates the internal force vector qe, the element flux Se, and the element gradient Ee of a 2D 3-node triangle potential element with linear potential interpolation. The function returns the element internal force vector

$$\mathsf{qe} = \begin{bmatrix} q^1 \\ q^2 \\ q^3 \end{bmatrix}$$

and the element flux and gradient matrices

$$\mathsf{Se} = \begin{bmatrix} \sigma_x & \sigma_y \end{bmatrix} \qquad \mathsf{Ee} = \begin{bmatrix} \varepsilon_x & \varepsilon_y \end{bmatrix}$$

The element node coordinates are passed as

$$\mathsf{Xe} = \begin{bmatrix} x_1 & y_1 \\ x_2 & y_2 \\ x_3 & y_3 \end{bmatrix}$$

The element property array, Ge, has the conductivity constant k as first element. The element potentials are passed as

$$\mathsf{Ue} = \begin{bmatrix} u^1 \\ u^2 \\ u^3 \end{bmatrix}$$

The element matrices corresponding to a group of elements defined by a topology matrix T may be created and assembled by a single call of the function qt3p.

Theory

The internal force vector is found by integration of the flux $\boldsymbol{\sigma}$ over the element, i.e.

$$\mathbf{q} \;=\; \int_A \mathbf{B}^T \boldsymbol{\sigma}\, dA \;=\; \mathbf{B}^T \boldsymbol{\sigma}\, A$$

A is the area of the triangle and $\mathbf{B}$ is the gradient matrix, see ket3p. The flux $\boldsymbol{\sigma}$ is obtained from the gradient $\boldsymbol{\varepsilon}$,

$$\boldsymbol{\varepsilon} \;=\; \mathbf{B}\,\mathbf{u} \qquad , \qquad \boldsymbol{\sigma} \;=\; \mathbf{D}\,\boldsymbol{\varepsilon}$$

The material conductivity matrix $\mathbf{D}$ is isotropic and has the form

$$\mathbf{D} \;=\; \begin{bmatrix} k & 0 \\ 0 & k \end{bmatrix}$$

See Also

ket3p, qeq4p, qet3e, qt3p

qq4e

Purpose

Driver for creating the global internal force vector, the stress matrix and the strain matrix for a group of 2D 4-node bilinear quadrilateral elastic elements in plane stress or strain using the function `qeq4e`.

Syntax

[q,S,E] = qq4e(q,T,X,G,u)

Description

Creates the element contribution to the global internal force vector q, the global stress matrix S and the global strain matrix E for a group of 2D 4-node bilinear quadrilateral elastic elements specified by the topology matrix T. Row e in T(:,:) defines element e,

$$\mathsf{T}(e,:) \quad = \quad [\ node_1 \quad \ldots \quad node_4 \quad PropNo\ ]$$

$node_i$ are the element node numbers and $PropNo$ is the property identification number of element e. X is the global node coordinate array and G is the global material property array. The total node displacements (u_x, u_y) are passed as

$$\mathsf{u} \quad = \quad [\ \begin{array}{c} u_x^1 \\ u_y^1 \\ \vdots \\ u_x^n \\ u_y^n \end{array}\ ]$$

where n is the total number of nodes.

Algorithm

For element e the node coordinate array is

$$\mathsf{Xe} \;=\; \mathsf{X}(\mathsf{T}(e, 1:4), :)$$

and the element property array is

$$\mathsf{Ge} \;=\; \mathsf{G}(\mathsf{T}(e, 5), :)$$

As there are 2 nodal displacements in each node the displacement vector u is first reshaped to a $n \times 2$ matrix,

$$\mathsf{U} \;=\; \mathsf{reshape}(\mathsf{u}, 2, \mathsf{rows}(\mathsf{X}))'$$

Next, the element displacements are extracted and reshaped into a vector with 8 components,

$$\begin{aligned} \mathsf{Ue} &= \mathsf{U}(\mathsf{T}(e, 1:4), :) \\ \mathsf{Ue} &= \mathsf{reshape}(\mathsf{Ue}', 8, 1) \end{aligned}$$

The internal force vector qe, the stress matrix Se and the strain matrix Ee of element e are created by the function qeq4e,

$$[\mathsf{qe}, \mathsf{Se}, \mathsf{Ee}] = \mathsf{qeq4e}(\mathsf{Xe}, \mathsf{Ge}, \mathsf{Ue})$$

The element contribution qe is added to the global internal force vector q by the function assmq,

$$\mathsf{q} = \mathsf{assmq}(\mathsf{q}, \mathsf{qe}, \mathsf{T}(e, :), 2)$$

where 2 is the number of degrees of freedom per node. The stress and strain of element e enter the global matrices as

$$\begin{aligned} \mathsf{S}(e, :) &= \mathsf{reshape}(\mathsf{Se}', 1, 12) \\ \mathsf{E}(e, :) &= \mathsf{reshape}(\mathsf{Ee}', 1, 12) \end{aligned}$$

which are of the form

$$\begin{aligned} \mathsf{S}(e, :) &= \left[\begin{array}{ccccccc} \sigma_x^1 & \sigma_y^1 & \sigma_{xy}^1 & \cdots & \sigma_x^4 & \sigma_y^4 & \sigma_{xy}^4 \end{array} \right] \\ \mathsf{E}(e, :) &= \left[\begin{array}{ccccccc} \varepsilon_x^1 & \varepsilon_y^1 & 2\varepsilon_{xy}^1 & \cdots & \varepsilon_x^4 & \varepsilon_y^4 & 2\varepsilon_{xy}^4 \end{array} \right] \end{aligned}$$

For each Gauss point g are stored the stress $(\sigma_x^g,\ \sigma_y^g,\ \sigma_{xy}^g)$ and the strain $(\varepsilon_x^g,\ \varepsilon_y^g,\ 2\varepsilon_{xy}^g)$.

See Also

assmq, qeq4e

qq4epe

Purpose

Driver for creating the internal force vector, the stress matrix and the strain matrix for a group of 2D 4-node bilinear quadrilateral elements for elasto-plastic, plane strain analysis using the function qeq4epe.

Syntax

```
[q,Sn,En] = qq4epe(q,T,X,G,u,S,E)
[q,Sn,En] = qq4epe(q,T,X,G,u,S,E,type)
```

Description

Creates the element contribution to the global internal force vector q, the global stress matrix Sn and the global strain matrix En for a group of 2D 4-node bilinear quadrilateral elasto-plastic elements specified by the topology matrix T. Row e in T(:,:) defines element e,

$$\mathsf{T}(e,:) \quad = \quad [\ node_1 \quad \ldots \quad node_4 \quad PropNo\ ]$$

$node_i$ are the element node numbers and $PropNo$ is the property identification number of element e. X is the global node coordinate array and G is the global material property array. The total node displacements (u_x, u_y) are passed as

$$\mathsf{u} \quad = \quad [\ \begin{array}{c} u_x^1 \\ u_y^1 \\ \vdots \\ u_x^n \\ u_y^n \end{array}\ ]$$

where n is the total number of nodes. The stress and strain of the last converged equilibrium state are passed in S and E.

Von Mises material model is used if type = 1. Associated Drucker-Prager is used if type = 2. Default is type = 1.

Algorithm

For element e the node coordinate array is

$$\mathsf{Xe} \;=\; \mathsf{X}(\mathsf{T}(e, 1:4), :)$$

and the element property array is

$$\mathsf{Ge} \;=\; \mathsf{G}(\mathsf{T}(e, 5), :)$$

As there are 2 nodal displacements in each node the displacement vector u is first reshaped to a $n \times 2$ matrix,

$$\mathsf{U} = \mathsf{reshape}(\mathsf{u}, 2, \mathsf{rows}(\mathsf{X}))'$$

Next, the element displacements are extracted and reshaped into a vector with 8 components,

$$\begin{aligned} \mathsf{Ue} &= \mathsf{U}(\mathsf{T}(e, 1:4), :) \\ \mathsf{Ue} &= \mathsf{reshape}(\mathsf{Ue}', 8, 1) \end{aligned}$$

The global stress matrix S and the global strain matrix E have one row for each element e,

$$\begin{aligned} \mathsf{S}(e,:) &= \Big[\ \sigma_x^1 \quad \sigma_y^1 \quad \sigma_z^1 \quad \sigma_{xy}^1 \quad \sigma_e^1 \quad \cdots \\ &\qquad \cdots \quad \sigma_x^4 \quad \sigma_y^4 \quad \sigma_z^4 \quad \sigma_{xy}^4 \quad \sigma_e^4\ \Big] \\ \mathsf{E}(e,:) &= \Big[\ \varepsilon_x^1 \quad \varepsilon_y^1 \quad \varepsilon_z^1 = 0 \quad 2\varepsilon_{xy}^1 \quad \varepsilon_p^1 \quad \cdots \\ &\qquad \cdots \quad \varepsilon_x^4 \quad \varepsilon_y^4 \quad \varepsilon_z^4 = 0 \quad 2\varepsilon_{xy}^4 \quad \varepsilon_p^4\ \Big] \end{aligned}$$

The stress and strain of element e are extracted from the global matrices and then reformatted into 4×5 matrices,

$$\begin{aligned} \mathsf{Se} &= \mathsf{reshape}(\mathsf{S}(e,:), 5, 4)' \\ \mathsf{Ee} &= \mathsf{reshape}(\mathsf{E}(e,:), 5, 4)' \end{aligned}$$

The internal force vector qe, the stress matrix Sen and the strain matrix Een are created by the function qeq4epe,

$$[\mathsf{qe}, \mathsf{Sen}, \mathsf{Een}] = \mathsf{qeq4epe}(\mathsf{Xe}, \mathsf{Ge}, \mathsf{Ue}, \mathsf{Se}, \mathsf{Ee}, \mathsf{type})$$

The element contribution qe is added to the global internal force vector by the function assmq,

$$\mathsf{q} = \mathsf{assmq}(\mathsf{q}, \mathsf{qe}, \mathsf{T}(e,:), 2)$$

where 2 is the number of degrees of freedom per node. The updated stress and strain of element e enter the global matrices as

$$\begin{aligned} \mathsf{Sn}(e,:) &= \mathsf{reshape}(\mathsf{Sen}', 1, 20) \\ \mathsf{En}(e,:) &= \mathsf{reshape}(\mathsf{Een}', 1, 20) \end{aligned}$$

which are of the same form as S and E.

See Also

assmq, qeq4epe

qq4eps

Purpose

Driver for creating the internal force vector, the stress matrix and the strain matrix for a group of 2D 4-node bilinear quadrilateral elements for elasto-plastic, plane stress analysis using the function qeq4eps.

Syntax

```
[q,Sn,En] = qq4eps(q,T,X,G,u,S,E)
[q,Sn,En] = qq4eps(q,T,X,G,u,S,E,type)
```

Description

Creates the element contribution to the global internal force vector q, the global stress matrix Sn and the global strain matrix En for a group of 2D 4-node bilinear quadrilateral elasto-plastic elements specified by the topology matrix T. Row e in T(:,:) defines element e,

$$\mathsf{T}(e,:) \quad = \quad [\ node_1 \quad \ldots \quad node_4 \quad PropNo\ ]$$

$node_i$ are the element node numbers and $PropNo$ is the property identification number of element e. X is the global node coordinate array and G is the global material property array. The total node displacements (u_x, u_y) are passed as

$$\mathsf{u} \quad = \quad [\ \begin{array}{c} u_x^1 \\ u_y^1 \\ \vdots \\ u_x^n \\ u_y^n \end{array}\ ]$$

where n is the total number of nodes. The stress and strain of the last converged equilibrium state are passed in S and E.

Von Mises material model is used if type = 1. Associated Drucker-Prager is used if type = 2. Default is type = 1.

Algorithm

For element e the node coordinate array is

$$\mathsf{Xe} \;=\; \mathsf{X}(\mathsf{T}(e, 1:4), :)$$

and the element property array is

$$\mathsf{Ge} \;=\; \mathsf{G}(\mathsf{T}(e, 5), :)$$

As there are 2 nodal displacements in each node the displacement vector u is first reshaped to a $n \times 2$ matrix,

$$\mathsf{U} \;=\; \mathsf{reshape}(\mathsf{u}, 2, \mathsf{rows}(\mathsf{X}))'$$

Next, the element displacements are extracted and reshaped into a vector with 8 components,

$$\begin{aligned} \mathsf{Ue} &= \mathsf{U}(\mathsf{T}(e, 1:4), :) \\ \mathsf{Ue} &= \mathsf{reshape}(\mathsf{Ue}', 8, 1) \end{aligned}$$

The global stress matrix S and the global strain matrix E have one row for each element e,

$$\begin{aligned} \mathsf{S}(e,:) &= \Big[\; \sigma_x^1 \;\; \sigma_y^1 \;\; \sigma_{xy}^1 \;\; \sigma_e^1 \;\; \cdots \\ &\qquad\qquad \cdots \;\; \sigma_x^4 \;\; \sigma_y^4 \;\; \sigma_{xy}^4 \;\; \sigma_e^4 \;\Big] \\ \mathsf{E}(e,:) &= \Big[\; \varepsilon_x^1 \;\; \varepsilon_y^1 \;\; 2\varepsilon_{xy}^1 \;\; \varepsilon_p^1 \;\; \cdots \\ &\qquad\qquad \cdots \;\; \varepsilon_x^4 \;\; \varepsilon_y^4 \;\; 2\varepsilon_{xy}^4 \;\; \varepsilon_p^4 \;\Big] \end{aligned}$$

The stress and strain of element e are extracted from the global matrices and then reformatted into 4×4 matrices,

$$\begin{aligned} \mathsf{Se} &= \mathsf{reshape}(\mathsf{S}(e,:), 4, 4)' \\ \mathsf{Ee} &= \mathsf{reshape}(\mathsf{E}(e,:), 4, 4)' \end{aligned}$$

The internal force vector qe, the stress matrix Sen and the strain matrix Een are created by the function $\mathsf{qeq4eps}$,

$$[\mathsf{qe}, \mathsf{Sen}, \mathsf{Een}] \;=\; \mathsf{qeq4eps}(\mathsf{Xe}, \mathsf{Ge}, \mathsf{Ue}, \mathsf{Se}, \mathsf{Ee}, \mathsf{type})$$

The element contribution qe is added to the global internal force vector by the function assmq,

$$\mathsf{q} \;=\; \mathsf{assmq}(\mathsf{q}, \mathsf{qe}, \mathsf{T}(e,:), 2)$$

where 2 is the number of degrees of freedom per node. The updated stress and strain of element e enter the global matrices as

$$\begin{aligned} \mathsf{Sn}(e,:) &= \mathsf{reshape}(\mathsf{Sen}', 1, 16) \\ \mathsf{En}(e,:) &= \mathsf{reshape}(\mathsf{Een}', 1, 16) \end{aligned}$$

which are of the same form as S and E.

See Also

assmq, qeq4eps

qq4p

Purpose

Driver for creating the global internal force vector, the flux matrix and the gradient matrix for a group of 2D 4-node bilinear quadrilateral potential elements using the function `qeq4p`.

Syntax

[q,S,E] = qq4p(q,T,X,G,u)

Description

Creates the element contribution to the global internal force vector q, the global flux matrix S and the global gradient matrix E for a group of 2D 4-node bilinear quadrilateral potential elements specified by the topology matrix T. Row e in T(:,:) defines element e,

$$\mathsf{T}(e,:) \;=\; [\; node_1 \;\; \ldots \;\; node_4 \;\; PropNo \;]$$

$node_i$ are the element node numbers and $PropNo$ is the property identification number of element e. X is the global node coordinate array and G is the global material property array. The node potentials u are passed as

$$\mathsf{u} \;=\; \begin{bmatrix} u^1 \\ \vdots \\ u^n \end{bmatrix}$$

where n is the total number of nodes.

Algorithm

For element e the node coordinate array is

$$\mathsf{Xe} \;=\; \mathsf{X}(\mathsf{T}(e, 1:4), :)$$

The element property array is

$$\mathsf{Ge} \;=\; \mathsf{G}(\mathsf{T}(e, 5), :)$$

and the element potential vector is

$$\mathsf{Ue} \;=\; \mathsf{u}(\mathsf{T}(e, 1:4))$$

The internal force vector qe, the flux matrix Se and the gradient matrix Ee of element e are created by the function qeq4p,

$$[\mathsf{qe}, \mathsf{Se}, \mathsf{Ee}] \;=\; \mathsf{qeq4p}(\mathsf{Xe}, \mathsf{Ge}, \mathsf{Ue})$$

The element contribution qe is added to the global internal force vector q by the function assmq,

$$\mathsf{q} \;=\; \mathsf{assmq}(\mathsf{q}, \mathsf{qe}, \mathsf{T}(e,:))$$

The flux and gradient of element e enter the global matrices as

$$\begin{aligned} \mathsf{S}(e,:) &= \mathsf{reshape}(\mathsf{Se}', 1, 8) \\ \mathsf{E}(e,:) &= \mathsf{reshape}(\mathsf{Ee}', 1, 8) \end{aligned}$$

which are the form

$$\begin{aligned} \mathsf{S}(e,:) &= \left[\; \sigma_x^1 \;\; \sigma_y^1 \;\; \cdots \;\; \sigma_x^4 \;\; \sigma_y^4 \;\right] \\ \mathsf{E}(e,:) &= \left[\; \varepsilon_x^1 \;\; \varepsilon_y^1 \;\; \cdots \;\; \varepsilon_x^4 \;\; \varepsilon_y^4 \;\right] \end{aligned}$$

For each Gauss point g are stored the flux $(\sigma_x^g,\ \sigma_y^g)$ and the gradients $(\varepsilon_x^g,\ \varepsilon_y^g)$.

See Also

assmq, qeq4p

qt3e

Purpose

Driver for creating the global internal force vector, the stress matrix and the strain matrix for a group of 2D 3-node linear triangle elastic elements using the function qet3e.

Syntax

[q,S,E] = qt3e(T,X,G,u)

Description

Creates the element contribution to the global internal force vector q, the global stress matrix S and the global strain matrix E for a group of 2D 3-node linear triangle elastic elements specified by the topology matrix T. Row e in T(:,:) defines element e,

$$\mathsf{T}(e,:) \quad = \quad [\ node_1 \quad node_2 \quad node_3 \quad PropNo\ ]$$

$node_i$ are the element node numbers and $PropNo$ is the property identification number of element e. X is the global node coordinate array and G is the global material property array. The total node displacements (u_x, u_y) are stored in a vector

$$\mathsf{u} \quad = \quad [\ \begin{array}{c} u_x^1 \\ u_y^1 \\ \vdots \\ u_x^n \\ u_y^n \end{array}\ ]$$

where n is the total number of nodes.

Algorithm

For element e the node coordinate array is

$$\mathsf{Xe} \;=\; \mathsf{X}(\mathsf{T}(e, 1:3), :)$$

and the element property array is

$$\mathsf{Ge} \;=\; \mathsf{G}(\mathsf{T}(e, 4), :)$$

As there are 2 nodal displacements in each node the displacement vector u is first reshaped to a $n \times 2$ matrix,

$$\mathsf{U} \;=\; \mathsf{reshape}(\mathsf{u}, 2, \mathsf{rows}(\mathsf{X}))'$$

Next, the element displacements are extracted and reshaped into a vector with 6 components,

$$\begin{aligned} \mathsf{Ue} &= \mathsf{U}(\mathsf{T}(e, 1:3), :) \\ \mathsf{Ue} &= \mathsf{reshape}(\mathsf{Ue}', 6, 1) \end{aligned}$$

The internal force vector qe, the stress matrix Se and strain matrix Ee of element e are created by the function qet3e,

$$[\mathsf{qe}, \mathsf{Se}, \mathsf{Ee}] = \mathsf{qet3e}(\mathsf{Xe}, \mathsf{Ge}, \mathsf{Ue})$$

The element contribution qe is added to the global internal force vector q by the function assmq,

$$\mathsf{q} = \mathsf{assmq}(\mathsf{q}, \mathsf{qe}, \mathsf{T}(e, :), 2)$$

where 2 is the number of degrees of freedom per node. The stress and strain of element e enter the global matrices as

$$\begin{aligned} \mathsf{S}(e, :) &= \mathsf{Se} \\ \mathsf{E}(e, :) &= \mathsf{Ee} \end{aligned}$$

which are of the form

$$\begin{aligned} \mathsf{S}(e, :) &= [\ \sigma_x \quad \sigma_y \quad \sigma_{xy}\ ] \\ \mathsf{E}(e, :) &= [\ \varepsilon_x \quad \varepsilon_y \quad 2\varepsilon_{xy}\ ] \end{aligned}$$

See Also

assmq, qet3e

qt3p

Purpose

Driver for creating the element internal force vector, the flux matrix and the gradient matrix for a group of 2D 3-node linear triangle potential elements using the function `qet3p`.

Syntax

[q,S,E] = qt3p(T,X,G,u)

Description

Creates the element contribution to the global internal force vector q, the global flux matrix S and the global gradient matrix E for a group of 2D 3-node linear triangle elastic elements specified by the topology matrix T. Row e in T(:,:) defines element e,

$$\mathsf{T}(e,:) \;=\; [\; node_1 \quad node_2 \quad node_3 \quad PropNo \;]$$

$node_i$ are the element node numbers and $PropNo$ is the property identification number of element e. X is the global node coordinate array and G is the global material property array. The node potentials u are passed as

$$\mathsf{u} \;=\; \begin{bmatrix} u^1 \\ \vdots \\ u^n \end{bmatrix}$$

where n is the total number of nodes.

Algorithm

For element e the node coordinate array is

$$\mathsf{Xe} \;=\; \mathsf{X}(\mathsf{T}(e, 1:4), :)$$

The element property array is

$$\mathsf{Ge} \;=\; \mathsf{G}(\mathsf{T}(e, 5), :)$$

and the element potential vector is

$$\mathsf{Ue} \;=\; \mathsf{u}(\mathsf{T}(e, 1:4))$$

The internal force vector qe, the flux matrix Se and gradient matrix Ee of element e are created by the function qet3p,

$$[\mathsf{qe}, \mathsf{Se}, \mathsf{Ee}] \;=\; \mathsf{qet3p}(\mathsf{Xe}, \mathsf{Ge}, \mathsf{Ue})$$

The element contribution qe is added to the global internal force vector q by the function assmq,

$$\mathsf{q} \;=\; \mathsf{assmq}(\mathsf{q}, \mathsf{qe}, \mathsf{T}(e,:))$$

The flux and gradient of element e enter the global matrices as

$$\begin{aligned} \mathsf{S}(e,:) &= \mathsf{Se} \\ \mathsf{E}(e,:) &= \mathsf{Ee} \end{aligned}$$

which are of the form

$$\begin{aligned} \mathsf{S}(e,:) &= [\ \sigma_x \quad \sigma_y\ ] \\ \mathsf{E}(e,:) &= [\ \varepsilon_x \quad \varepsilon_y\ ] \end{aligned}$$

See Also

assmq, qet3p

reaction

Purpose

Extracts reaction force components from internal force vector.

Syntax

R = reaction(q,C,dof,comp)

Description

The reaction matrix R is extracted from the internal force vector sans q. The constrained degrees of freedom are identified by the constraints matrix C and the number of degrees of freedom per node dof. The function extracts force component comp from q.

The internal force vector is passed as

$$\mathsf{q} = \begin{bmatrix} q_1 \\ q_2 \\ \vdots \\ q_n \end{bmatrix}$$

where n is the total number of degrees of freedom. The constraints matrix C has the format

$$\mathsf{C} = \begin{bmatrix} node_1 & dof_1 & u_1 \\ node_2 & dof_2 & u_2 \\ \vdots & \vdots & \vdots \end{bmatrix}$$

Constrained degrees of freedom are identified by node number $node_i$, the number of the degree of freedom dof_i, and the prescribed value u_i. The reaction matrix R has the format using the MATLAB function find

$$\mathsf{R} = \begin{bmatrix} node_1 & r_1 \\ node_2 & r_2 \\ \vdots & \vdots \end{bmatrix}$$

where $node_i$ is the node number of a constrained node and r_i is the reaction force.

Algorithm

The nodes which are constrained in degree of freedom No. comp are found as

$$\mathsf{nodes} \;=\; \mathsf{find}(\mathsf{C}(:,2) == \mathsf{comp})$$

The MATLAB function find returns an array containing the row numbers for which column 2 is equal to comp. The array of global dof numbers is then calculated as

$$\mathsf{dof_no} \;=\; (\mathsf{C}(\mathsf{nodes},1) - 1) * \mathsf{dof} + \mathsf{C}(\mathsf{nodes},2);$$

The reactions are then extracted from the internal force vector as

$$\mathsf{forces} \;=\; \mathsf{q}(\mathsf{dof_no})$$

Examples

A problem with 5 nodes and two degrees of freedom per node is fixed in node 1 and 2,

$$\mathsf{C} \;=\; \begin{bmatrix} 1 & 1 & 0.0 \\ 1 & 2 & 0.0 \\ 2 & 1 & 0.0 \\ 2 & 2 & 0.0 \end{bmatrix}$$

The corresponding internal force vector is

$$\mathsf{q}' \;=\; [1.0, 2.5, -1.0, 2.5, 0.0, 0.0, 0.0, 0.0, 0.0, -5.0]$$

The call

$$\mathsf{H} = \mathsf{reaction}(\mathsf{q}, \mathsf{C}, 2, 1)$$

produces

$$\mathsf{H} \;=\; \begin{bmatrix} 1 & 1.00 \\ 2 & -1.00 \end{bmatrix}$$

See Also

find, q$\cdots$, setbc

rows

Purpose

Determines the number of rows in a matrix.

Syntax

m = rows(A)

Description

The number of rows m of matrix A are determined by the MATLAB function size. The function is a substitute for the command size(A,1) used by MATLAB version 4.0.

Examples

Consider the matrix A

$$A = \begin{bmatrix} 1 & 2 & 4 \\ 9 & 5 & 3 \\ 4 & 7 & 7 \\ 3 & 3 & 6 \\ 4 & 9 & 1 \end{bmatrix}$$

For this matrix rows(A) will return 5.

See Also

cols, size

setbc

Purpose

Sets imposed boundary conditions by use of large diagonal stiffness terms.

Syntax

[K,p] = setbc(K,p,C)

[K,p] = setbc(K,p,C,dof)

[K,p,ks] = setbc(K,p,C)

[K,p,ks] = setbc(K,p,C,dof)

Description

The global stiffness matrix K and the global load vector p are modified for the imposed boundary conditions by introduction of a large diagonal stiffness term ks. The boundary conditions are set by the constraint matrix C,

$$\mathsf{C} = \begin{bmatrix} node_1 & dof_1 & u_1 \\ node_2 & dof_2 & u_2 \\ \vdots & \vdots & \vdots \end{bmatrix} \qquad \text{or} \qquad \mathsf{C} = \begin{bmatrix} node_1 & u_1 \\ node_2 & u_2 \\ \vdots & \vdots \end{bmatrix}$$

All constrained degrees of freedom are identified by node number $node_i$, the number of the relevant degree of freedom at the node dof_i, and the prescribed value u_i of this degree of freedom. For problems with a single degree of freedom per node, $\mathsf{dof} = 1$, the simple format can be used.

Algorithm

For the condition imposed by row i the corresponding global degree of freedom number is

$$\begin{aligned} \mathsf{ig} &= \mathsf{C}(i,1) && \text{for } \mathsf{dof} = 1 \\ \mathsf{ig} &= (\mathsf{C}(i,1) * \mathsf{dof} - 1) + \mathsf{C}(i,2) && \text{for } \mathsf{dof} > 1 \end{aligned}$$

The degree of freedom $u(\mathsf{ig})$ is constrained to take the value u_i by introducing a large spring stiffness $\mathsf{ks} = 10^6 \cdot \mathsf{max}(\mathsf{diag}(\mathsf{K}))$ in the corresponding diagonal element of the global stiffness matrix K and adding the corresponding load to the global load vector p, i.e.

$$\begin{aligned} \mathsf{K}(\mathsf{ig},\mathsf{ig}) &= \mathsf{K}(\mathsf{ig},\mathsf{ig}) + \mathsf{ks} \\ \mathsf{p}(\mathsf{ig}) &= \mathsf{p}(\mathsf{ig}) + \mathsf{ks} * u_i \end{aligned}$$

Examples

For a problem with two degrees of freedom per node, dof = 2, such as 2D elasticity, the constraint matrix

$$\mathsf{C} = \begin{bmatrix} 5 & 1 & 0.0 \\ 5 & 2 & 0.0 \\ 8 & 1 & 0.0005 \end{bmatrix}$$

specifies that node 5 is constrained against any displacement in both the x- and the y-direction, $u_x = 0.0$ and $u_y = 0.0$, while a displacement of $u_x = 0.0005$ is imposed on node 8.

See Also

diag, max, reaction, setload

setload

Purpose

Sets nodal loads.

Syntax

p = setload(p,P)

Description

Sets up the global load vector p from the non-vanishing nodal load vectors which are given as rows in the matrix P. The format of the load matrix P is

$$\mathsf{P} = \begin{bmatrix} n_1 & p_1^1 & \dots & p_{dof}^1 \\ n_2 & p_1^2 & \dots & p_{dof}^2 \\ \vdots & \vdots & \vdots & \vdots \end{bmatrix}$$

where $(p_1^n, \dots, p_{dof}^n)$ is the load vector at node n. The number of loaded nodes corresponds to the number of rows in the load matrix P.

Examples

For a problem with two degrees of freedom per node, dof = 2, such as 2D elasticity, the load matrix

$$\mathsf{P} = \begin{bmatrix} 2 & 0.8 & 1.2 \\ 3 & 1.1 & 5.7 \\ 5 & 2.5 & 0.0 \end{bmatrix}$$

specifies three concentrated loads: $(0.8, 1.2)$ acting at node 2, $(1.1, 5.7)$ acting at node 3, and $(2.5, 0.0)$ acting at node 5. The corresponding global load vector p is

$$\mathsf{p}' = [0.0, 0.0, 0.8, 1.2, 1.1, 5.7, 0.0, 0.0, 2.5, 0.0, \dots]$$

See Also

setbc