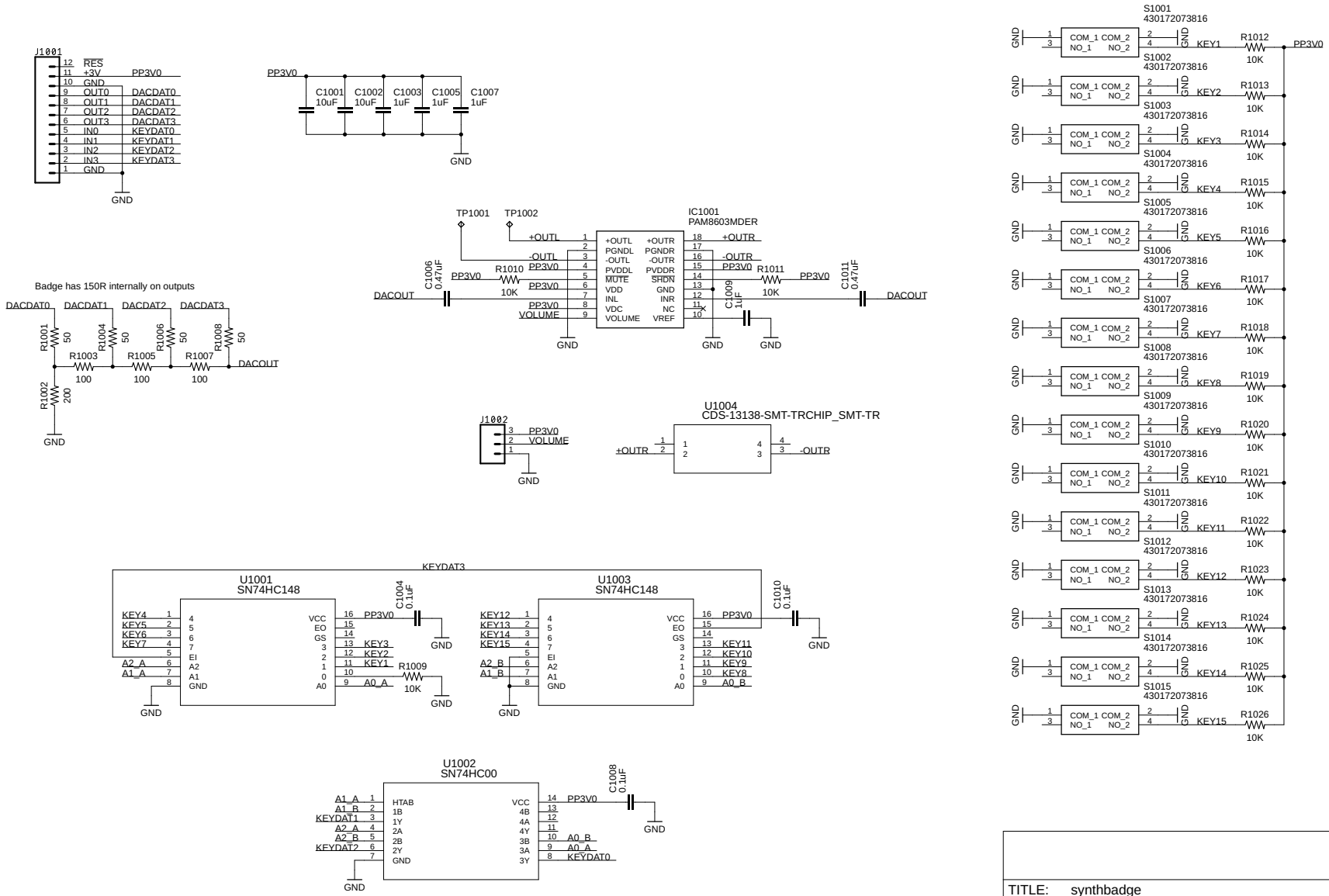

TITLE: synthbadge	
Document Number:	REV:
Date: 11/3/2022 11:14 AM	Sheet: 1/1