Predicting User Age by Keystroke Dynamics

Avar Pentel

Tallinn University, School of Digital Techologies
pentel@tlu.ee

Abstract. Keystroke dynamics is investigated over 30 years because of its biometric properties, but most of the studies are focusing on identification. In current study our goal is to predict user age by keystroke data. We collected keystroke data through different real life online systems during 2011 and 2018. Data logs were labeled with user age, gender and in some cases with other available information. We analyzed 2.3 million keystrokes, from 7119 keystroke data logs, produced by ca 1000 individual subjects, presenting six different age groups. All these data logs are also made available to research community, and the web address is provided in the paper. We carried out binary and multiclass classification using supervised machine-learning methods. Binary classification results were all over the baseline, best f-score over 0.92 and lowest 0.82. Multiclass classification distinguished all groups over baseline. Analyzing distinguishing features, we found overlap with text-mining features from previous studies.

Keywords. Keystroke dynamics, Age prediction, Multiclass classification, Supervised machine learning.

1 Introduction

When interacting with other people, the age is important attribute that we are taking into account. The same action, the same sentence is interpreted differently depending on author's age. Thus, systems ability to detect automatically user's age is crucial component of intelligent system that serves humans. As humans, we do not recommend the same things to adults and children, and we can expect similar behavior from automatic recommendation systems. With widespread of social media, people can register accounts with false age information about themselves. Younger people might pretend to be older to get access to restricted content, older people might pretend to be younger in order to communicate with youngster. As we can imagine, this kind of false information might lead to serious threats, as for instance pedophilia or other criminal activities.

Many studies are done on user age prediction based on text-mining approaches. There are differences in vocabulary between age groups [1-4]. Similarly, there are stylistic differences between age groups [3, 5, 6]. The shortcomings of text-mining approaches are language dependency and the need for longer texts. But besides content and style, there are physical patterns of typing, keystroke dynamics, that can reveal new valuable information, and allow making better predictions about user age on shorter input.

Keystroke dynamic is now studied over 30 years [7] and is well accepted as biometric property allowing user identification. As byproduct of those identification studies, there are reports, that some user properties, including age, influences identification quality [8]. Among other properties, gender and affective sate were mentioned. In recent years, there is growing interest to use keystroke dynamics in user profiling. There are some studies on emotion detection [9, 10], gender and age [11, 12] prediction. However, the number of studies on age prediction is still small, and there is lack of available age and keystroke datasets.

In this study we present our experimentations on dataset that is collected between 2011-2018. Some of the same data is used in our other studies and reported separately [10, 12, 15]. Combining keystroke data from wide variety of contexts, we put together all data to a single dataset not depending on if it was typed on desktop, laptop, tablet or smartphone. Our intention in doing so was to set a baseline with relatively diverse data and simple set of features, so we could in further studies step-vise exclude data with some common properties and to test if it improves the models. Similarly we can test new feature types, and classification methods. All data logs used in this study are made available to research community, and can be downloaded from following web address:

http://www.tlu.ee/~pentel/keystroke_age/

2 Methods

2.1 Description of data sources

Keystroke data collected 2011-2018 from six different data sources as described in [11], but in this study we use about 10 times more instances of data, and we classify between more age groups. These data sources represented online content management systems, feedback questionnaires, testing environments, and controlled experiments. Most of the users were typing in Estonian language, there were handful of logs in Russian and some logs in English and German, but typed by native Estonians or Russians. As data collection time was relatively long there are number of data instances created by the same users, but representing different age groups. As our data sources had very different context, starting from content management systems, where users created long documents, and ending with short comments and feedback, then number of keystrokes per user varied significantly between groups and in groups. Distribution of the final dataset by age groups and average number of key presses per instance is presented in Table. 1.

2.2 Data collection methods

Data collection was carried out in real life online environments, where in many cases we had no control over user input technology. We still collected data about screen resolution, a *user agent* string to specify used web browser, operating system and, in our case, most importantly, if the used device was desktop computer or laptop, tablet or smartphone.

Table 1. Distribution of keystroke data across age groups

Age group	Number of instances in group	Average number of key presses per instance
<=15	376	308.41
16-19	258	3217.42
20-29	357	176.11
30-39	1327	170.58
40-49	3213	241.28
>=50	1588	176.93
Total:	7119	321.88

Our experimental results show, that there are significant differences in typing patterns between virtual keyboards on smart devices and physical keyboards. Namely, the key is hold down significantly longer on physical keyboards (ca 7 times longer), but the time between last key release and next key press takes longer about the same magnitude on virtual keyboards. There is no such significant difference between typing patterns between laptop and desktop, furthermore, there is no straightforward method to detect if web user is using desktop or laptop. Despite differences in typing patterns, in this study we did not exclude keystroke data collected from phones and tablets.

For data collection, we implemented JavaScript code [9] for logging keystroke data, and server backend in PHP, and integrated it in to all of our data collection systems. By keystroke data we mean three numbers that characterizing each key press:

1) keyCode - numeric representation of a key,
2) keyDown time - time, when the key was pressed,
3) keyUp time - the time when the key is released.

Out of those triples, we calculated different variables that characterizing particular user.

2.3 Preprocessing and feature extraction

We used in this study only 4 types of features. All used feature types were time-based: key hold time, key seek time and n-graph latencies. The descriptions of these feature types are given in Table 2. On figure below the table (Fig. 1.), the visual scheme of keystroke features is presented as example of two-key sequence. For each instance, we calculated mean time for each key or n-key combination, and used it as variable in feature vector.

Table 2. Description of used keystroke features

Type	Explanation	Total	Used
Hold	Mean time between key press and release for particular key.	100	29
Seek	Mean time between previous key release and current key press for particular key.	100	29
n-graph latencies	Mean time of 2-4 consecutive key presses, starting from first key press and ending with last key release for particular n-graph.	335 418 118	63 5 2
Pauses between words	Mean time of n-graphs that includes space character	6	6

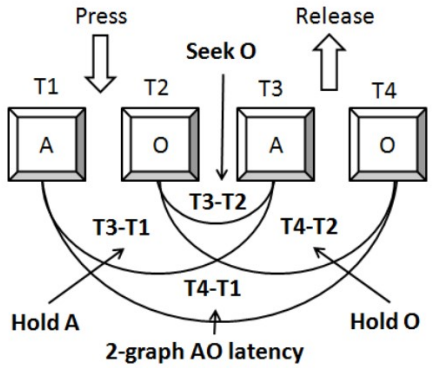

Fig. 1. Visual Scheme of used keystroke features

Because the logs lengths varied significantly between and in the age groups, we calculated frequency of each feature in the set of all instances, and excluded all features with frequency below 500 occurrences in set. In this way we got 134 features to extract from the each log.

Another important issue with keystroke dynamics is the problem of missing values. When in text mining we have n-gram based features, they are calculated by relative frequency, and having zero frequency for some feature is normal. In keystroke dynamics, when time based features are in use, zero means that particular key or combination of keys are typed instantly, or, in case of standardized data, that the particular keys are typed as average. While latter is better option, it does not characterize the situation adequately. If in question is some key combination that is physically difficult to type or is it so rare that people are not used to it, then the

probability that it is typed slower and the probability that it is missing value, are both high. If all instances were standardized then it would rather make sense to substitute missing values with feature mean, or to use imputation algorithm [13] for substitution missing values. In current study we substituted all missing values with feature mean.

2.4 Machine learning

We performed binary classification between each age group and multiclass classification for all classes together. Before generating models, we balanced our classes by undersampling the majority class or classes in case of multiclass classification. This means that in case of multiclass classification, all classes were undersampled to 258 instances, like the smallest age group 16-19, and in case of binary classification the number of instances per class varied from 258 to 1588, depending on sizes of binary classes (Table 1). The models were generated using Support Vector Machines, Random Forest, C4.5, and Logistic Regression. Java implementations of listed algorithms that are available in the Weka [14] library were used. 10-fold cross validation was used for evaluation of all models. It means, we partitioned our data into 10 even sized and random parts, and then using one part for validation and another 9 as training dataset. We did so 10 times and then averaged validation results. Presenting our results here, we use a single f-score value that is an average of both classes' f-score values.

3 Results

In all cases of binary classification, Random Forest yield to best results. In Table 3, the f-scores of binary classification between each age group are presented. Results are weighted average f-scores of both classes. As all classes were balanced then the baseline in binary classification was 0.5.

Table 3. Binary classification between each age group.

	<=15	**16-19**	**20-29**	**30-39**	**40-49**
16-19	0.82				
20-29	0.87	0.83			
30-39	0.89	0.9	0.86		
40-49	0.9	0.9	0.87	0.87	
>=50	0.89	0.92	0.86	0.87	0.86

As mentioned above, we tested four different algorithms. We do not present here the results of each algorithm separately, because Random Forest classifiers were only slightly better than those generated by C4.5 and SVM. We speak here about differences as small as 0.9 vs. 0.88, for example. Differences between models generated by Logistic Regression and Random Forest were bigger, but Logistic regression still yield to results over 0.7 in each classification.

The best results with multiclass classification were also made by Random Forest. We present the results in form of confusion matrics, f-scores and ROC area in following Table 4.

Table 4. Multiclass classication on balanced dataset using Random Forest. Confusion matrics.

Classed as	<=15	16-19	20-29	30-39	40-49	>=50	F-score	ROC Area
<=15	**166**	24	27	16	8	17	0.69	0.9
16-19	15	**189**	34	5	7	8	0.73	0.93
20-29	6	31	**154**	27	11	29	0.55	0.87
30-39	13	4	24	**157**	23	37	0.59	0.86
40-49	12	6	30	28	**149**	33	0.61	0.87
>=50	15	3	31	38	33	**138**	0.53	0.85
Weighted average (baseline F-score is 0.167):							**0.62**	**0.88**

As we can see in the case of multiclass classification, all the results are far over baseline 0.167, but also number of false positives and false negatives are in all cases smaller than the number of true positives. Similar pattern emerged also with other tested algorithms.

Features with the greatest info gain are presented in Table 5. We compared these 20 features, with text-mining frequency based features [6] extracted from different data but the same language, and we found that there is only one (4. KS) feature that is not presented in the top of frequency based n-graphs and n-grams. The finding indicates that the frequency of some character combinations used in particular age group is correlated to typing speed of those characters.

We could not use current keystroke dataset for n-graph frequency analysis, because this includes cases where the user types someone else's text and in that case n-graph frequencies would characterize rather the original author of the texts and not the typist.

Table 5. Top 20 features in multiclass classification

1.	I{space}	6.	D{space}	11.	{space}O	16.	SI
2.	AL	7.	Seek Ä	12.	LE	17.	EL
3.	S{space}	8.	AK	13.	MA	18.	E{space}
4.	KS	9.	Seek I	14.	IN	19.	JA
5.	EI	10.	L{space}	15.	Seek L	20.	LA

4 Conclusion

Keystroke dynamics data collection is unobtrusive for users and can be easily implemented in to real life web environments. Opportunity to guess the age of anonymous user right on the way by analyzing typing patterns can have many useful applications starting from automatic recommendation systems and ending with cyber crime detection.

We demonstrated that keystroke data that is collected through different environments and contexts, and produced by different devices - desktops, laptops, tablets and smartphones, can still provide enough information to distinguish between different age groups. Our main intention with this study was to set a baseline for further studies, where we can exclude data with some specific properties and to classify it separately. Building different models for smartphones and tablets, desktops and laptops will improve the prediction accuracy.

Similarly we can test step-vise if some new feature types will improve our models; for instance these based on frequency of correction keys or others calculated by larger groups of keys that are grouped by their physical location or by frequency they are represented in language. There are groups of key combinations that are more difficult to type than others. These difficulties might be the result of the inconvenient physical locations of the keys or rareness of the key combination in the user language. Focusing on these difficulties, we can get some cues about user's vocabulary, and we can also get information about physical properties of the user. As we experienced in our handedness detection study [15], creating combined features that are based on physical location of the keys, can significantly improve classification results. Both cues - physical and vocabulary - help to make better predictions about user's age group.

While we had some good profiling results in this study, our main contribution is a successful attempt to profile users on very diverse keystroke data, which is collected mainly in real life situations and with large number of individual subjects. We also made this dataset available on the web, and provided link to it in the end of the introduction section of this paper. Our results are still preliminary, but it is good starting point for further studies, and we anticipate a more systematic and in-depth study in the near future.

5 References

1. Schwartz, H. A. et al.: "Personality, Gender, and Age in the Language of Social Media: The Open-Vocabulary Approach." Ed. Tobias Preis. PLoS ONE 8.9 (2013).
2. Zhang J. et al.: Your age is no secret: Inferring microbloggers' ages via content and interaction analysis. In Proceedings of the 10th International Conference on Web and Social Media, ICWSM 2016. AAAI Press. p. 476-485 (2016)
3. Rosenthal, S., McKeown, K.: Age prediction in blogs: a study of style, content, and online behavior in pre- and post-social media generations. In Proceedings of the 49th Annual Meeting of the Association for Computational Linguistics: Human Language Technologies - Vol 1 (2011).
4. Morgan-Lopez, A. A. et al. Predicting age groups of Twitter users based on language and metadata features. PLoS ONE 12.8 (2017)

5. Flekova, L., Preotiuc-Pietro, D., Ungar, L. H.: Exploring Stylistic Variation with Age and Income on Twitter. In Proceedings of the 54th Annual Meeting of the Association for Computational Linguistics - Vol 2 (2016)
6. Pentel, A.: Effect of Different Feature Types on Age Based Classification of Short Texts, In Proceedings of 6th International Conference on Information, Intelligence, Systems and Applications. IEEE Digital Library (2015)
7. Garcia, J.: Personal identification apparatus. US Patent Office, 4621334. (1986)
8. Monrose, F., Rubin. A. D.: Keystroke Dynamics as a Biometric for Authentication. Future Generation Computer Systems. Elsevier, 16, 351-359. (2000)
9. Vizer, L. M.: Detecting cognitive and physical stress through typing behavior. In Proceedings CHI EA '09 CHI '09 Extended Abstracts on Human Factors in Computing Systems, 3113-3116. (2009)
10. Pentel, A.: Emotions and User Interactions with Keyboard and Mouse. In Proceedings of 8th International Conference on Information, Intelligence, Systems and Applications, IEEE Digital library (2017)
11. Fairhurst, M., Costa-Abreu. M. D.: Using keystroke dynamics for gender identification in social network environment, in: 4th International Conference on Imaging for Crime Detection and Prevention (ICDP 2011)
12. Pentel. A.: Predicting Age and Gender by Keystroke Dynamics and Mouse Patterns. UMAP '17 Adjunct Publication of the 25th Conference on User Modeling, Adaptation and Personalization. pp 381-385, ACM Digital Library (2017)
13. Schafer, J.L.: Analysis of Incomplete Multivariate Data, New York: Chapman and Hall (1997)
14. Hall, M. et al.: The WEKA data mining software: an update. SIGKDD Explorations, vol 11, 1 (2009)
15. Pentel, A.: High Precision Handedness Detection Based on Short Input Keystroke Dynamics. In Proceedings of 8th International Conference on Information, Intelligence, Systems and Applications, IEEE Digital library (2017)