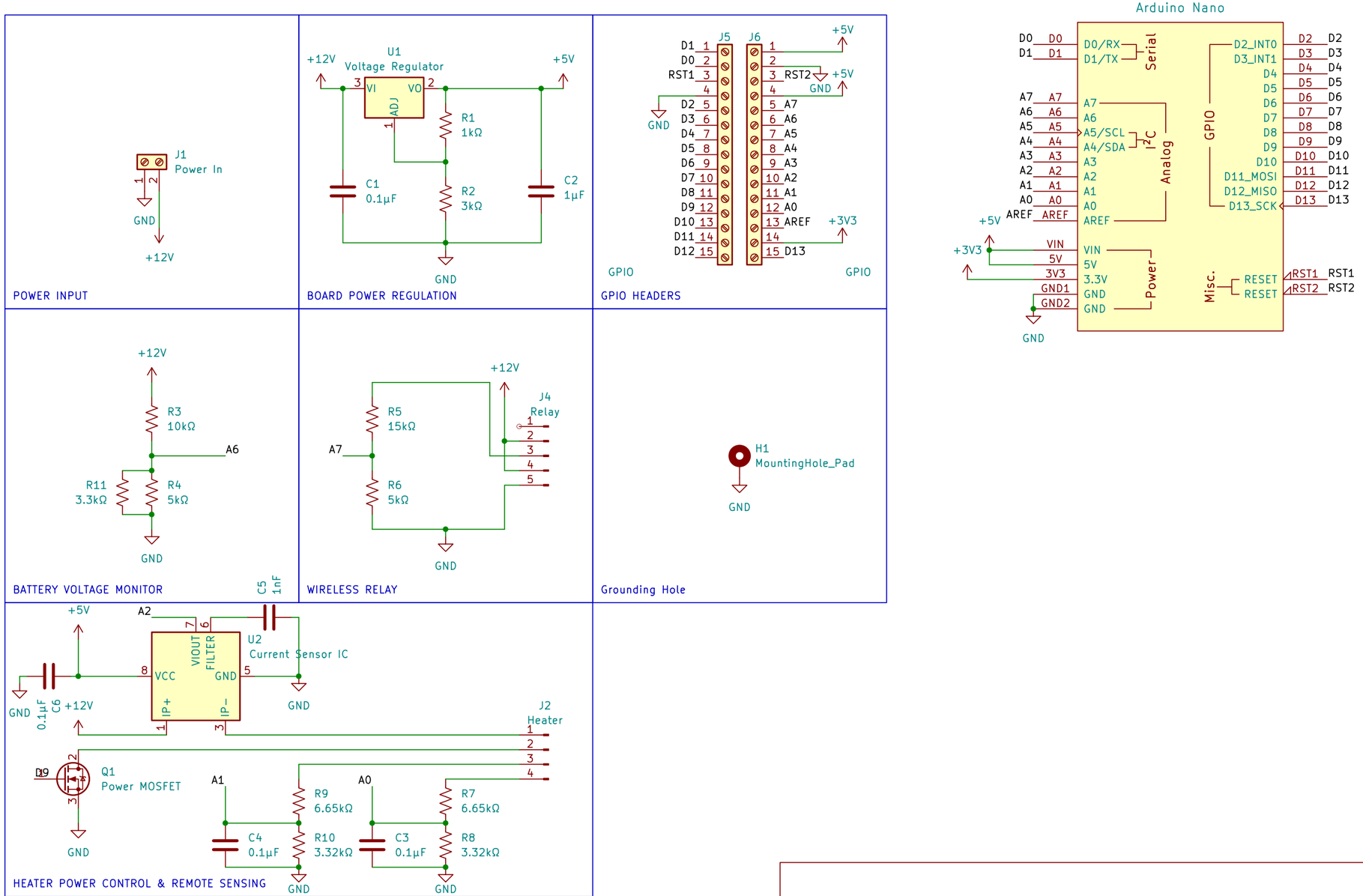

ME692

Sheet: /

File: heaterboard−3.kicad_sch

Title: Windshield Heater Controller Schematic

Size: USLetter	Date:	**Rev: 3**
KiCad E.D.A. 8.0.1		Id: 1/1