Power

File: Power.kicad_sch

IMU_Haptic_Audio_Display

File: IMU_Haptic_Audio_Display.kicad_sch

Sheet: /
File: PoC_V1.kicad_sch

Title:

Size: A4	Date:	**Rev:**
KiCad E.D.A. 9.0.4		Id: 1/3

Power Management IC (PMIC)

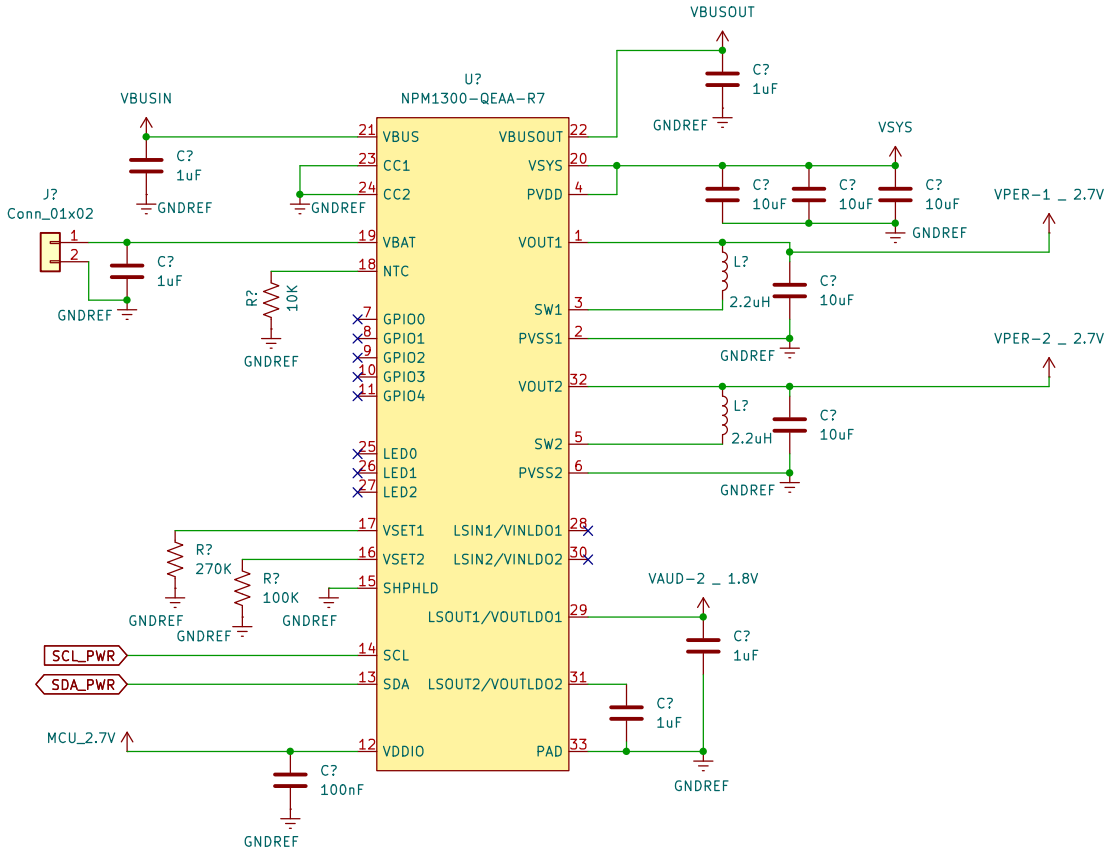

1) CC1 & CC2 not used. So it is connected to Gnd as mentioned in 6.1.3 USB port detection at page 20&21 in Ref.1

2) Battery NTC not used. So it is connected to ground through 10K resistor

3) To make VOUT1 = 2.7V, VSET1 connected to Resistor 270K as mentioned in "Table 18: Default VOUT1 using an external resistor" at page 47 Ref.1

4) To make VOUT2 = 2.7V, VSET2 connected to Resistor 100K as mentioned in "Table 19: Default VOUT2 using an external resistor" at page 47 Ref.1

Ref.1:
nPM1300 Product Specification V1.1 _ 4490_483 v1.1 / 2024-06-16
https://download.mikroe.com/documents/datasheets/nPM1300_datasheet.pdf

Low Dropout Regulator (LDO)

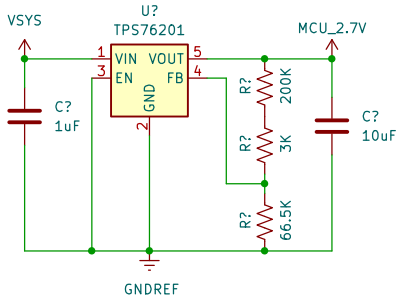

For 2.7V output -> R1 = 203K and R2 = 66.5K

$$R1 = \left(\frac{V_O}{V_{ref}} - 1\right) \times R2$$

OUTPUT VOLTAGE PROGRAMMING GUIDE

OUTPUT VOLTAGE (V)	DIVIDER RESISTANCE (kΩ)‡	
	R1	R2
0.7	3.36	66.5
0.9	23.2	66.5
1.2	53.6	66.5
1.5	83.5	66.5
1.8	113	66.5
2.5	182	66.5
3.3	246	66.5
3.6	294	66.5
4	332	66.5
5	432	66.5

‡ 1% values shown.

K.S.Rangasamy College of Technology
Aero Linkers
Product 360

Sheet: /Power/
File: Power.kicad_sch

Title: Power Management

Size: A4	Date:	**Rev: V1.0**
KiCad E.D.A. 9.0.4		Id: 2/3

IMU

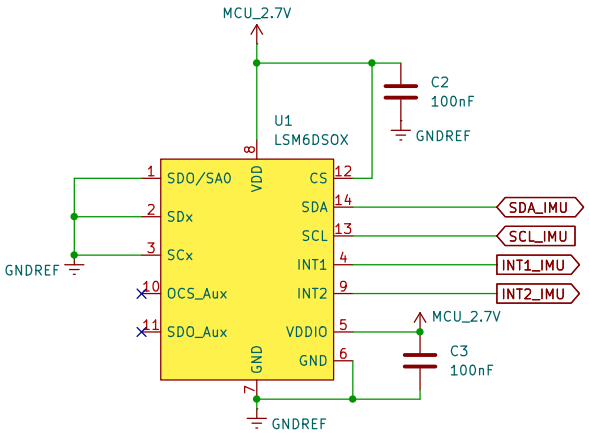

1)SDO/SA0 I2C Address pin connected to Gnd. So I2C slave address is 1101010b. 5.1.2 I²C operation at Page 17 & 18 in Ref. 2
I2C Read: 11010101 (D5h)
I2C Write: 11010100 (D4h)

2)IMU conected in Mode 1. 3.1 Pin connections at page 8 in Ref. 2

Haptic

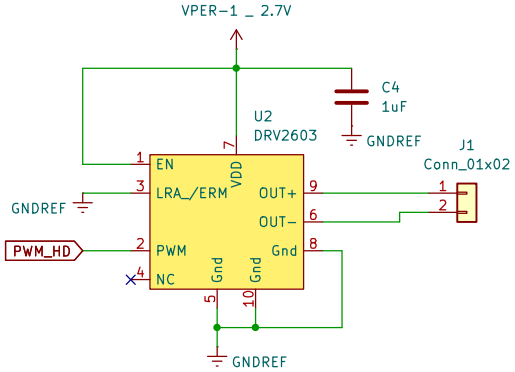

1)ERM mode used. 5. Pin Configuration and Functions at Page 3 in Ref. 3

2)Power is from nPM1300 Buck-1.

Audio

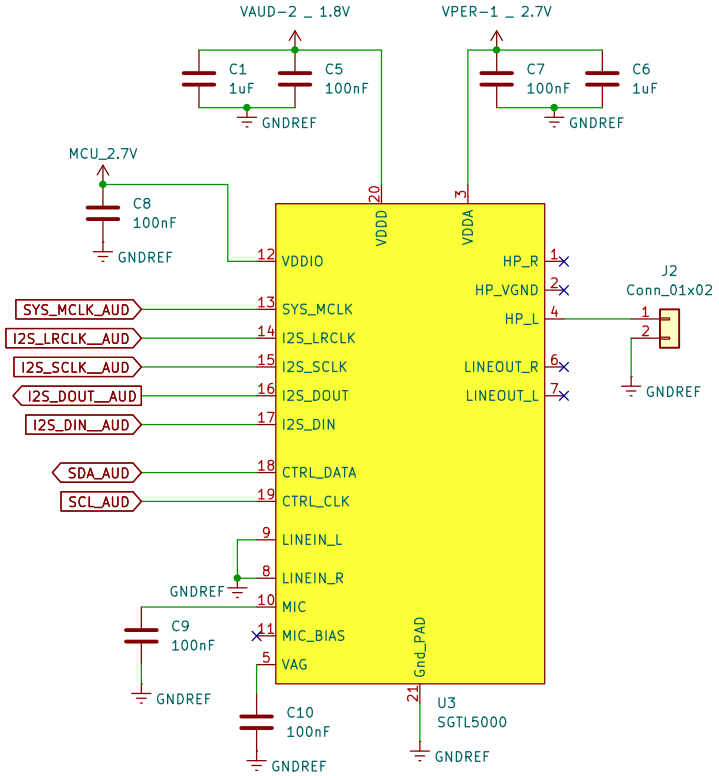

1)I2C slave address is 0001010(R/W). I2C at Page 24 in Ref. 4
I2C Read: 00010101
I2C Write: 00010100

Sheet: /IMU_Haptic_Audio_Display/
File: IMU_Haptic_Audio_Display.kicad_sch

Title:

Size: A4	Date:	Rev:
KiCad E.D.A. 9.0.4		Id: 3/3