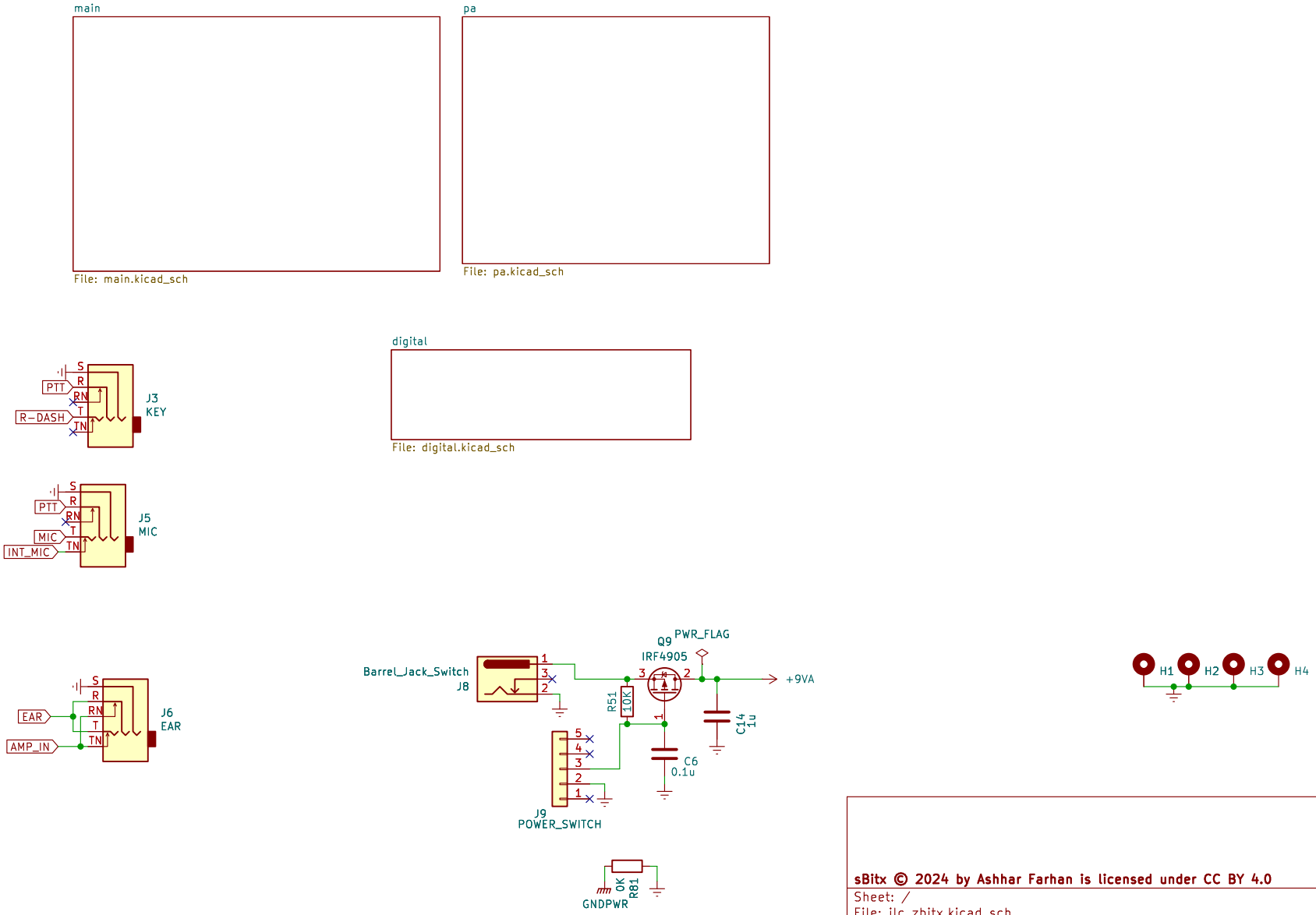

sBitx © 2024 by Ashhar Farhan is licensed under CC BY 4.0

Sheet: /
File: jlc_zbitx.kicad_sch

Title: sBitx

Size: A4	Date: 2024-04-17	Rev: v3.3
KiCad E.D.A. 8.0.9		Id: 1/4

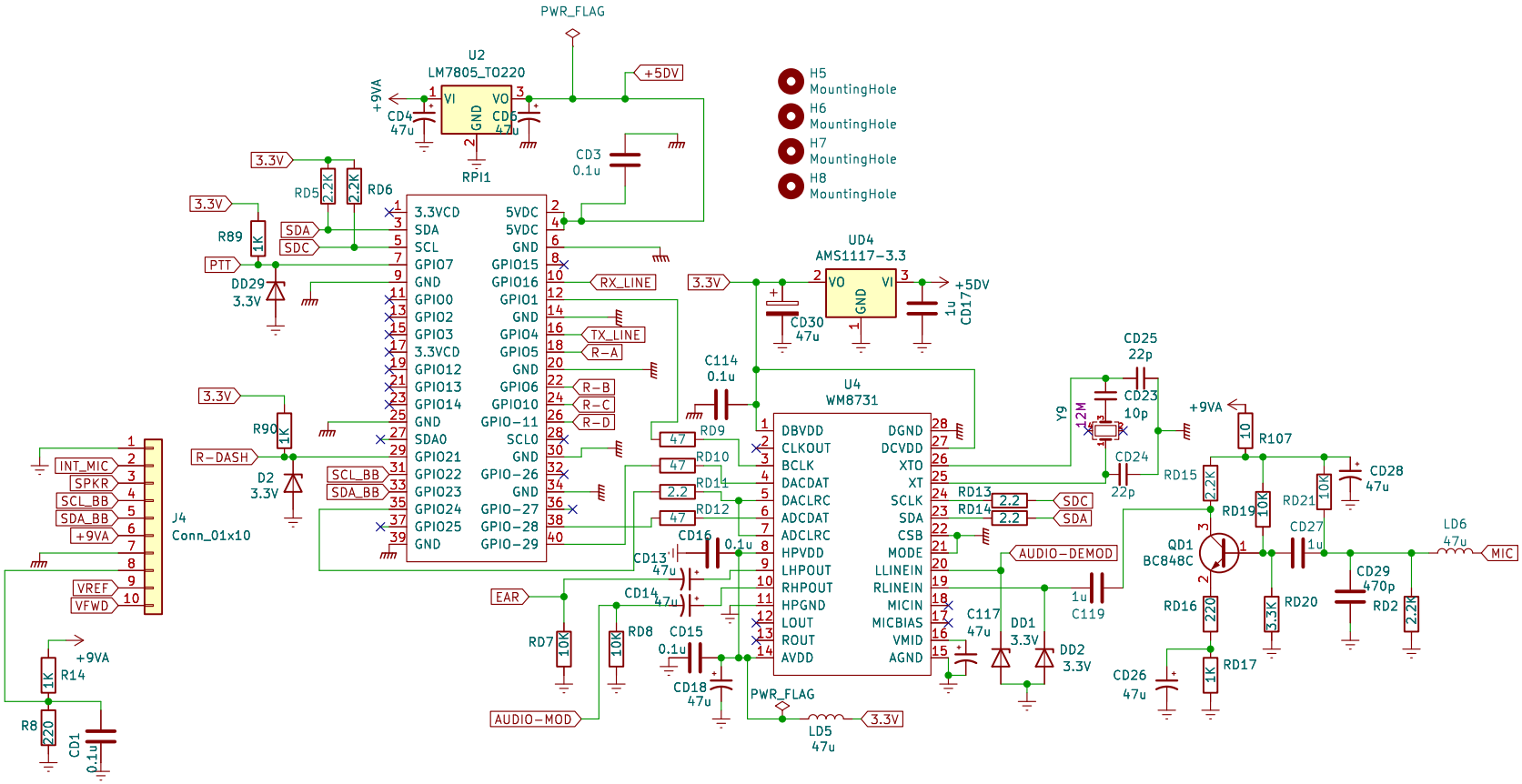

Figure 2

sBitx © 2024 by Ashhar Farhan is licensed under CC BY 4.0

Sheet: /digital/
File: digital.kicad_sch

Title: sBitx

Size: A4	Date: 2024-04-17	Rev: v3.3
KiCad E.D.A. 8.0.9		Id: 3/4

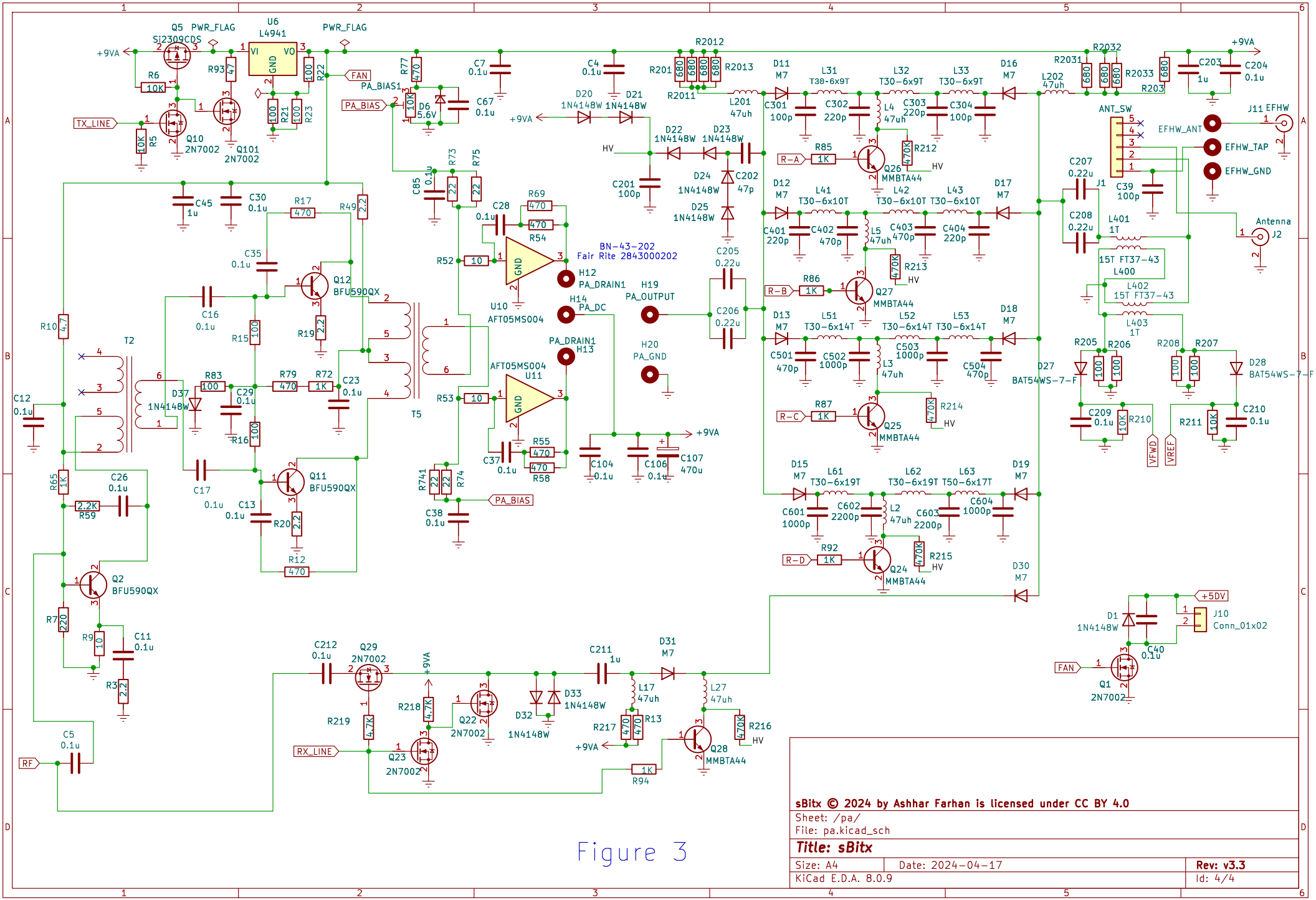

Figure 3

sBitx © 2024 by Ashhar Farhan is licensed under CC BY 4.0

Sheet: /pa/
File: pa.kicad_sch

Title: sBitx

Size: A4	Date: 2024-04-17	Rev: v3.3
KiCad E.D.A. 8.0.9		Id: 4/4

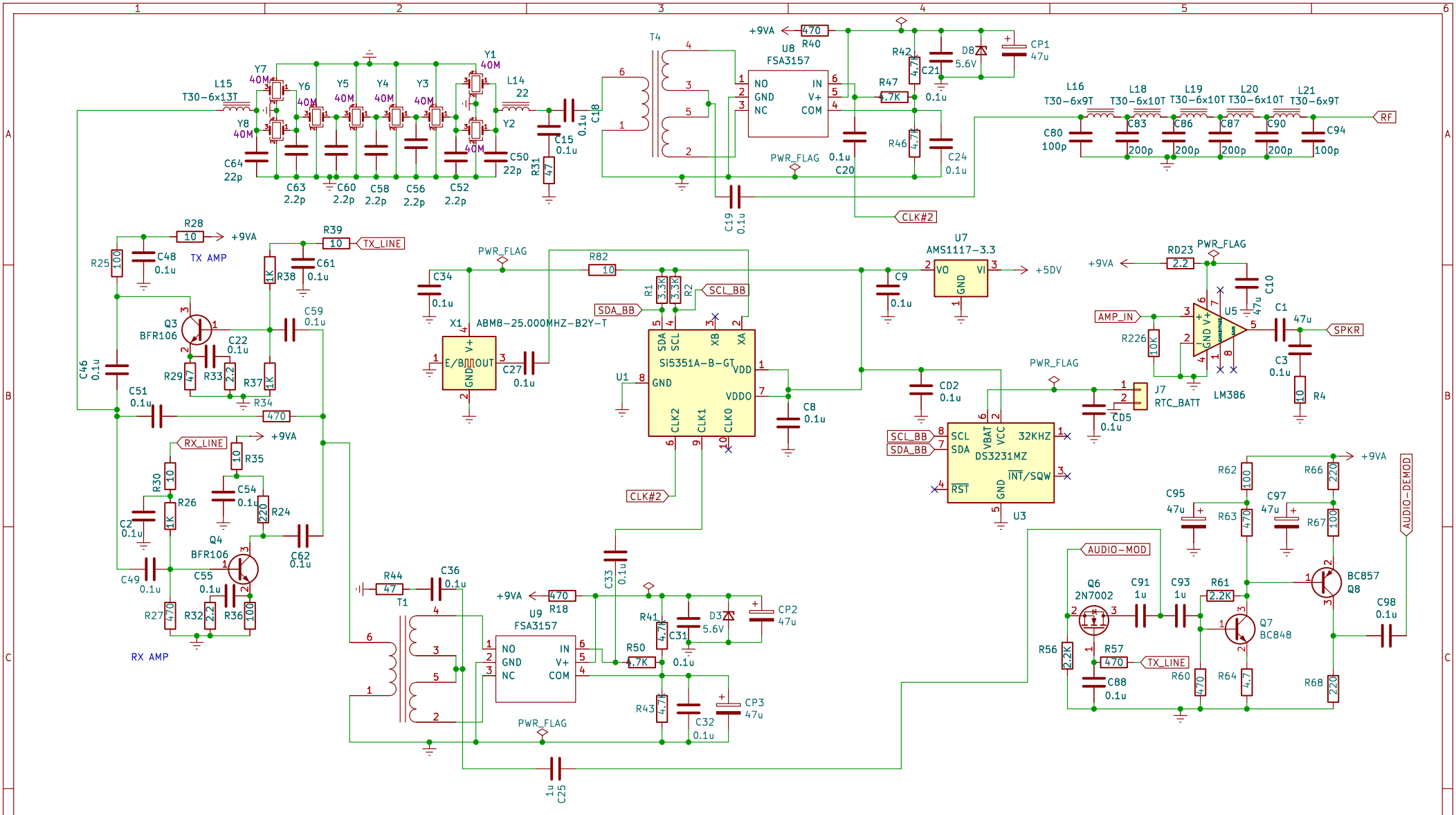

Figure 1

sBitx © 2024 by Ashhar Farhan is licensed under CC BY 4.0

Sheet: /main/
File: main.kicad_sch

Title: sBitx

Size: A4	Date: 2024-04-17	Rev: v3.3
KiCad E.D.A. 8.0.9		Id: 5/4