VisSim - [AV_Inlet_and_AV_Calculations_Including_10_ATM_Models.vsm]

File Edit View Simulate Analyze Blocks Tools Window Help

C:\0_afc_working\Air_Inlet_and_AV_Calculations_Including_10_
- Air Properties
  - Air Total Temp
  - R to F
  - K to R
  - Air Total Density
  - Atmosphere Table Alt: (feet) P: (atm) T:
    - Fluid Properties 1 = Water 2 = PAO 3 = J
    - Pressure Units Code 0 = atm 1 = psi 2 =
    - Det P & T
      - Standard Day 1962 Geopotential Atm Mil-
      - Hot Day 1962 Geopotential Atm Mil-STD-2
      - Cold Day 1962 Geopotential Atm Mil-STD-
      - Tropical Day 1962 Geopotential Atm Mil-
      - Polar Day 1962 Geopotential Atm Mil-STD
      - Standard Day 1976 Atmosphere
      - Hot Day 1976 Atmosphere
      - Cold Day 1976 Atmosphere
      - 13-to-1 Select
      - Hot Day MIL-HDBK-310 1% Risk
      - Cold Day MIL-HDBK-310 20% Risk
      - Hot Day MIL-STD-3013
      - Polar Day MIL-STD-3013
      - Hot Day MIL-HDBK-310 1% Risk, Modified
      - Cold Day EAFB, Pete Law
      - Hot Day EAFB, Pete Law
      - 13-to-1 Select
    - Det Cp, K & mu
  - R to K
- K to R
- R to F

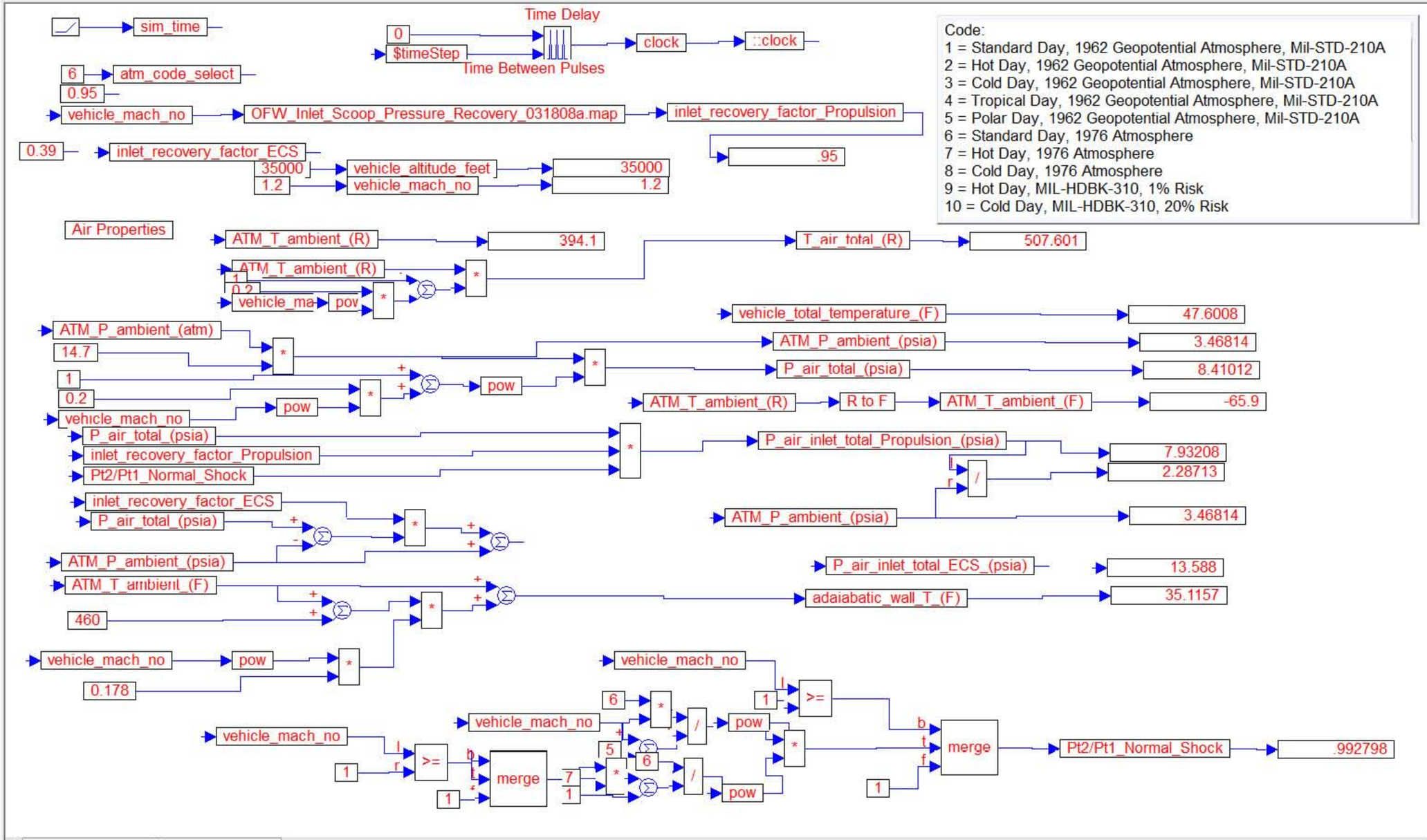

Blks 1654 Rng 0 : 40000 Step 1 T 0 RK2

VisSim - [AV_Inlet_and_AV_Calculations_Including_10_ATM_Models.vsm::Air Properties]

File Edit View Simulate Analyze Blocks Tools Window Help

C:\0_afc_workii
Air Properti
R to F

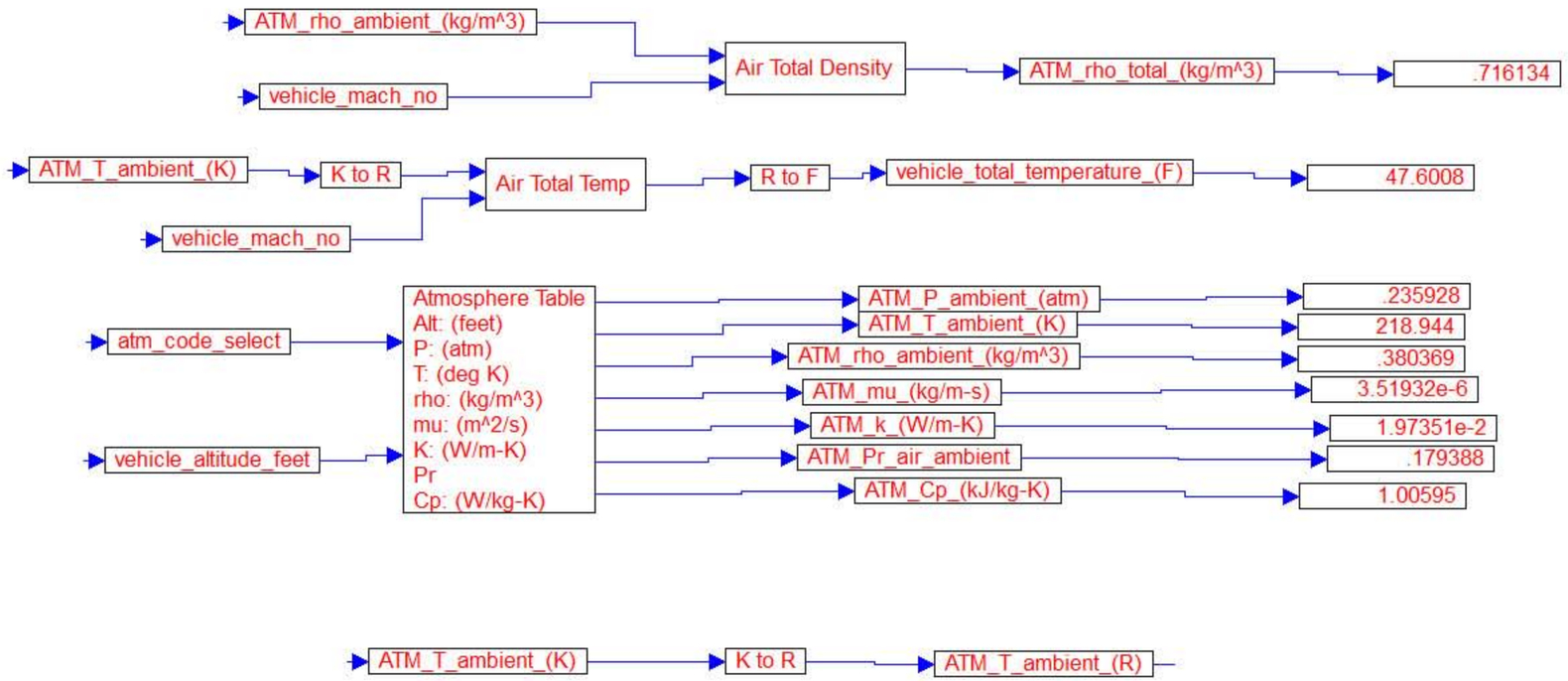

Blks 1654 Rng 0 : 40000 Step 1 T 0 RK2

VisSim - [AV_Inlet_and_AV_Calculations_Including_10_ATM_Models.vsm::Air Properties.Atmosphere Table Alt: (feet) P: (atm) T:]

File Edit View Simulate Analyze Blocks Tools Window Help

C:\0_afc_workii
Air Properti
Air Tota
R to F
K to R
Air Tota
Atmosp
K to R
R to F

Code:
1 = Standard Day, 1962 Geopotential Atmosphere, Mil-STD-210A
2 = Hot Day, 1962 Geopotential Atmosphere, Mil-STD-210A
3 = Cold Day, 1962 Geopotential Atmosphere, Mil-STD-210A
4 = Tropical Day, 1962 Geopotential Atmosphere, Mil-STD-210A
5 = Polar Day, 1962 Geopotential Atmosphere, Mil-STD-210A
6 = Standard Day, 1976 Atmosphere
7 = Hot Day, 1976 Atmosphere
8 = Cold Day, 1976 Atmosphere
9 = Hot Day, MIL-HDBK-310, 1% Risk
10 = Cold Day, MIL-HDBK-310, 20% Risk

:code_select_tmp
:altitude_tmp
:code_select_tmp → :code_select
:altitude_tmp → :altitude
:code_select, :altitude → Det P & T → :P_ambient_psi, :T_ambient_R
:T_ambient_K, :rho_(kg/m^3) → Det Cp, K & mu → :Cp_(kJ/kg-K), :K_(W/m K), :mu_(kg/m-s), :T_ambient_K
:T_ambient_R → R to K
1, :P_ambient_psi → Pressure Units Code (0 = atm, 1 = psi, 2 = pascal, 3 = millibar) → :P_ambient_atm
4, :T_ambient_K, :P_ambient_atm → Fluid Properties (1 = Water, 2 = PAO, 3 = JP-8, 4 = Air, 5 = AMAD Oil, 6 = Hyd. Fluid) → :rho_(kg/m^3)
:Cp_(kJ/kg-K), :mu_(kg/m-s), :K_(W/m-K), 1000 → * → / → * → :Pr_air_ambient → .179388

:P_ambient_atm
:T_ambient_K
:rho_(kg/m^3)
:mu_(kg/m-s)
:K_(W/m-K)
:Pr_air_ambient
:Cp_(kJ/kg-K)

Blks 1654 Rng 0 : 40000 Step 1 T 0 RK2

VisSim - [AV_Inlet_and_AV_Calculations_Including_10_ATM_Models.vsm::Air Properties.Atmosphere Table Alt: (feet) P: (atm) T:.Det P & T]

File Edit View Simulate Analyze Blocks Tools Window Help

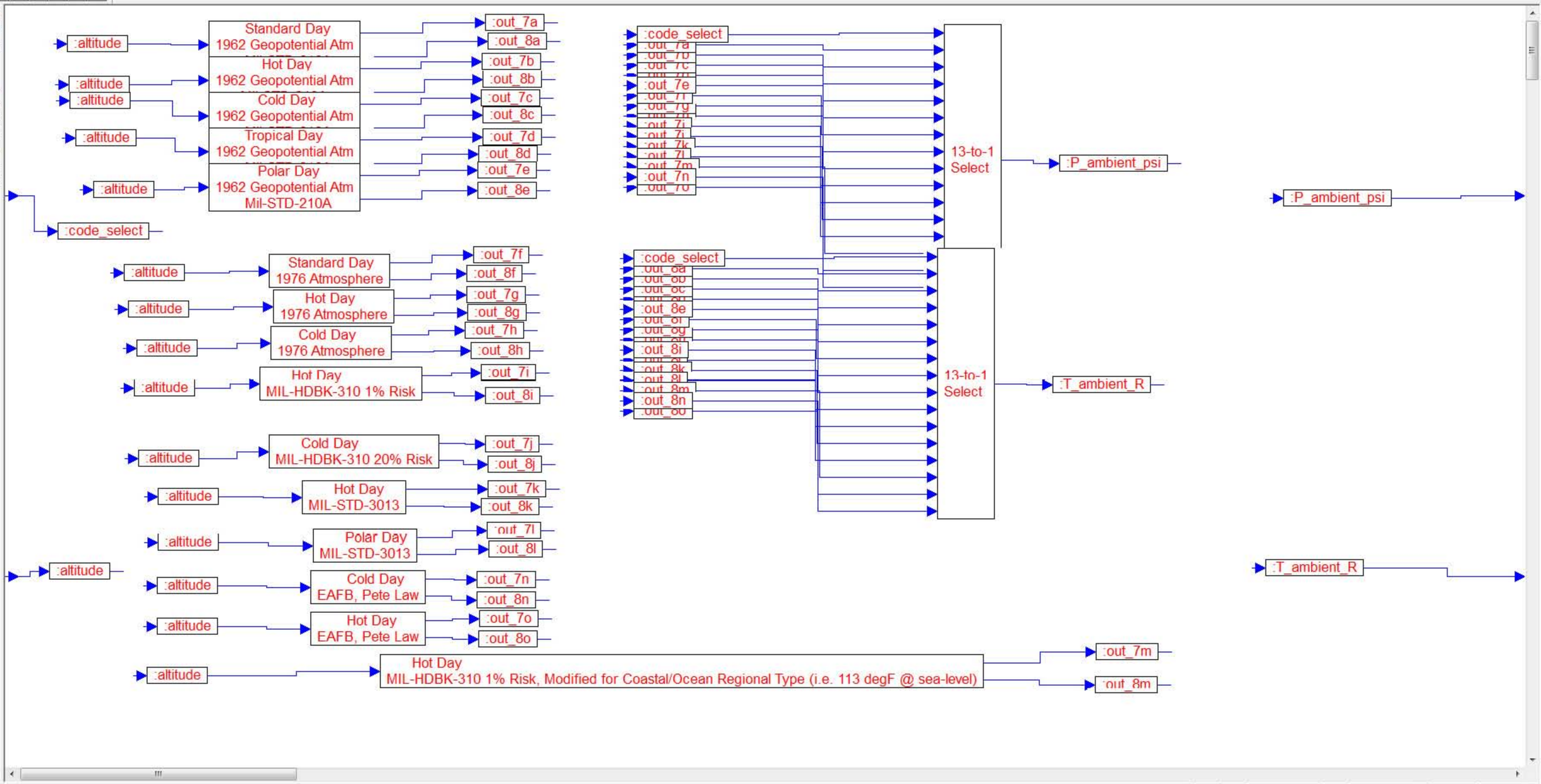

Blks 1654 Rng 0 : 40000 Step 1 T 0 RK2

VisSim - [AV_Inlet_and_AV_Calculations_Including_10_ATM_Models.vsm::Air Properties.Atmosphere Table Alt: (feet) P: (atm) T:.Det P & T. Sta]

File Edit View Simulate Analyze Blocks Tools Window Help

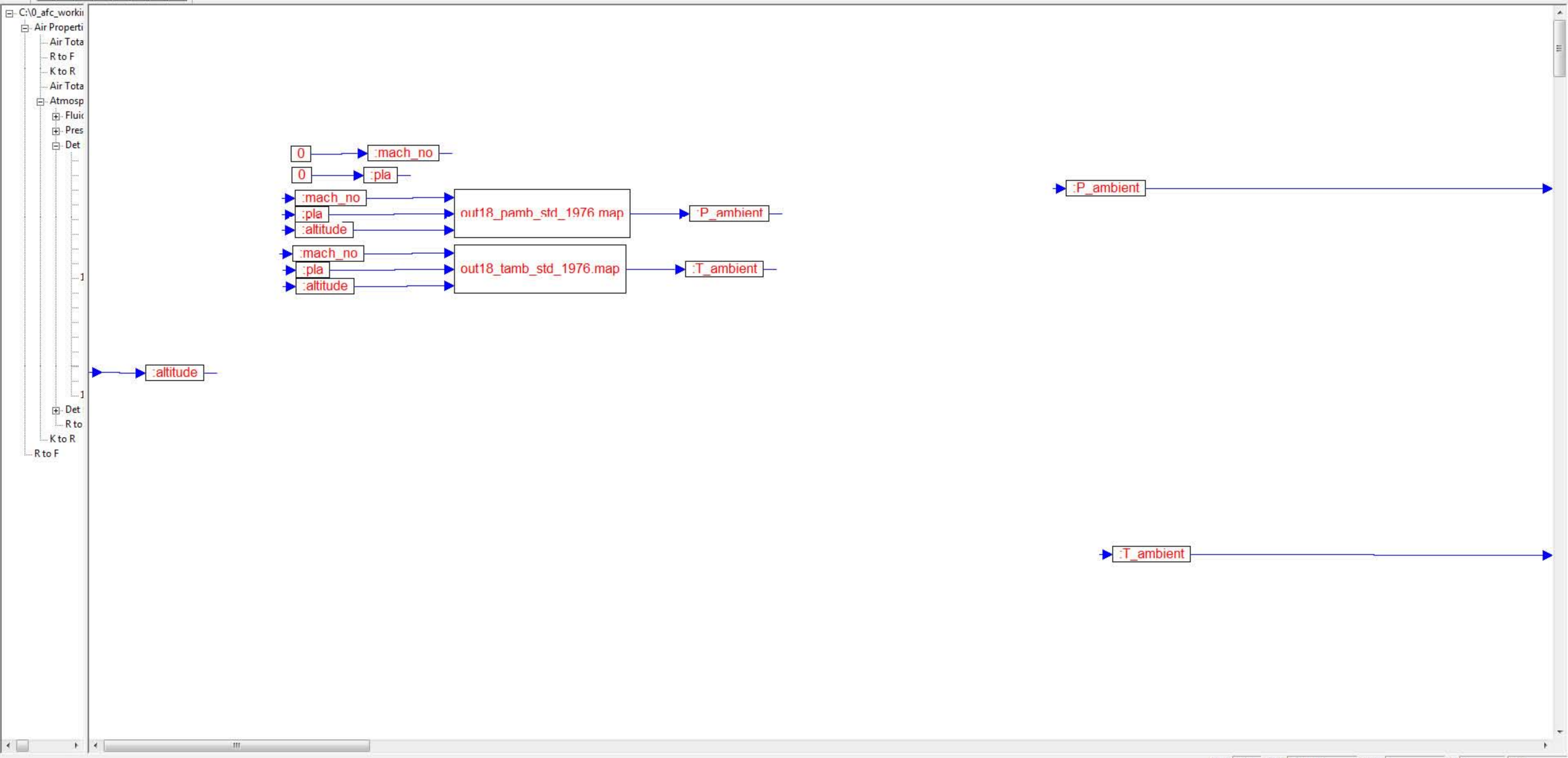

Blks 1654 Rng 0 : 40000 Step 1 T 0 RK2