Revision History

Revision	Date	Reason for redrawing	Page Update	Drawed	Checked	Approved
01	2013.06.05	Preliminary	--	Austin Lin	Brian Lee	Barry Chang
02	2013.06.11	Remove Damping Resistors at NAND Flash Side	Page4,5	Austin Lin	Brian Lee	Barry Chang
02	2013.06.24	Modify RA4 footprint from R0603 to R0402 to match PCB layout	Page3	Austin Lin	Brian Lee	Barry Chang
02	2013.07.15	Modify power circuit BOM value for finr tune power sequence, detail as below. Change C19 from 47nF to 22nF (footprint=C0402A) Change R35 from NC_51K ohm to NC_150K ohm (footprint=R0402A) Change R70 from 150K ohm to 51K ohm (footprint=R0402A) Change R38 from NC_51K ohm to NC_150K ohm (footprint=R0402A)	Page3	Brian Lee	Austin Lin	Barry Chang
02	2013.08.16	For Schematic cannot open correctly in ORCAD10.3 Korea language issue. Modify below part ORCAD library: 1. U14, SPI flash 2. SD1, schottky diode	Page3	Brian Lee	Austin Lin	Barry Chang
10	2013.08.30	1. Delete A1V2 LDO power supply circuit. Delete U7, 2. For improve SATA DEVSLP power consumption 2.1 Modify LDO U4 output net-name. 2.2 Add NMOS Q2, R42=86K, R43=51K, C33=1uF for adjust VCCK=1.0V at SATA DEVSLP mode. 2.3 Add VCCIO power supply option circuit (L4,L15,L16,L17) 3. Delete U12 external 2.7V VDT. Reserve GPIO P17 for future used. 4. Delete SPI flash (U13,BC45,R68) 5.Change 3.3Vto1.8V LDO U4 (Flash IO power) from SOT-23 (300mA) to SOT-89-5 (800mA)	Page 2,3	Austin Lin	Brian Lee	Barry Chang
11	2013.10.21	1. Add Test Point to WE, REN_P, DQS_P and DQ 2. Add Hole	Page 2,3,4	Austin Lin	Brian Lee	Barry Chang
20	2013.11.19	Change power solution from AAT to Silergy	3	Brian Lee	Austin Lin	Barry Chang
20	2013.12.02	1. For fine tune SATA DEVSLP power consumption, change R43 from 10K ohm to NC. 2. For support PC power cable with 3.3V, change R12 from 0 ohm to schottky diode / PKG: SOD523, if SOD723 is better.	2,3	Brian Lee	Austin Lin	Barry Chang

Page1	Cover_Page
Page2	Controller_BGA288_2.5INCH
Page3	Power_Host_5V
Page4	NF_BGA152x8 (CH0, CH1)
Page5	NF_BGA152x8 (CH2, CH3)
Page6	DRAM_DDR3
Page7	Flash Mounting Guide

Silicon Motion, INC.

PageTitle	Cover Page
DOC.Number	<Doc>
Sch.FileName	SM2246AA_BGA288_2.5INCH_BGA152X16_DB_V20
Rev	20
Date:	Tuesday, October 21, 2014
Sheet	1 of 7

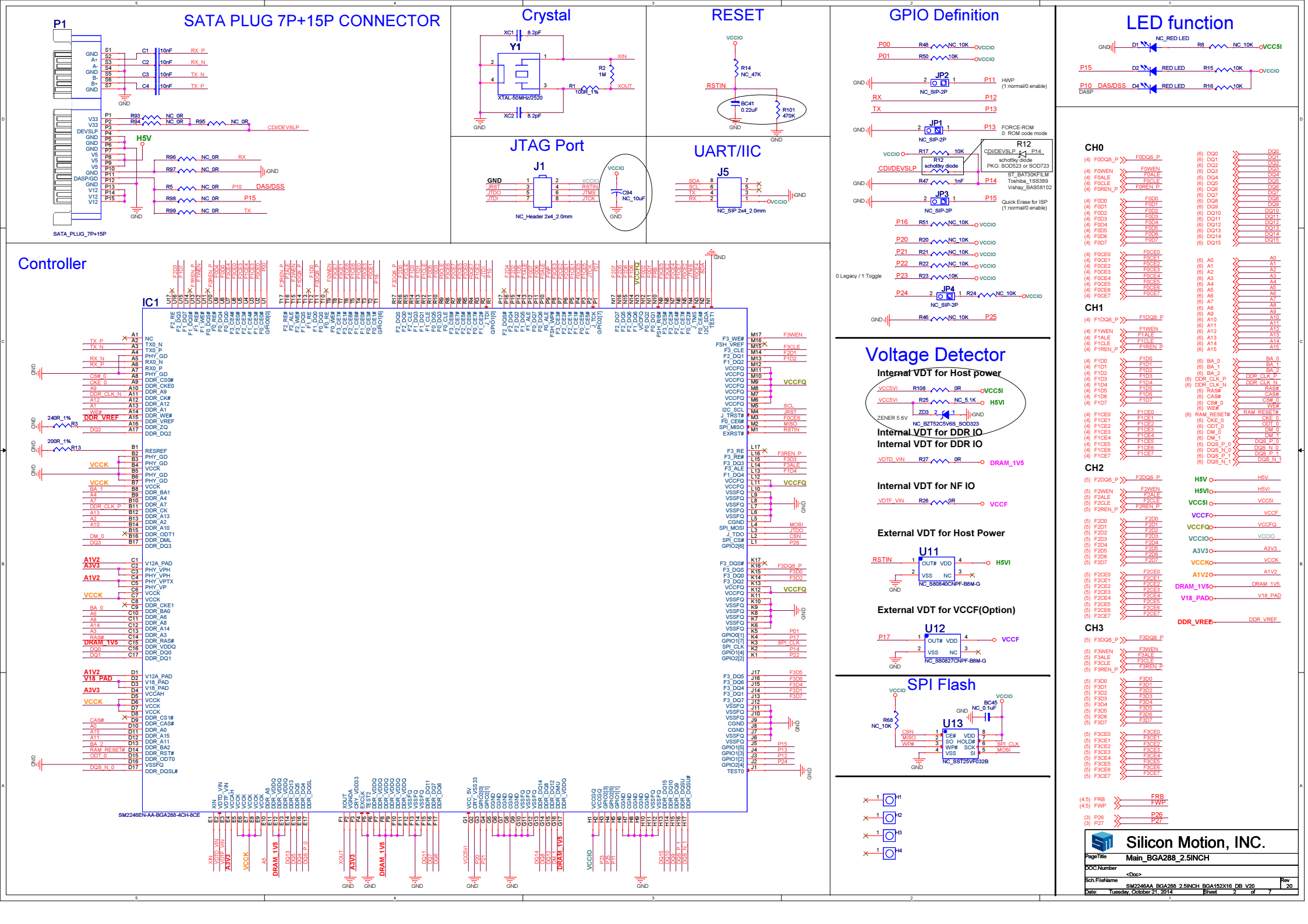
SATA PLUG 7P+15P CONNECTOR
P1
SATA_PLUG_7P+15P
Crystal
Y1
XTAL-50MHz/2520
RESET
JTAG Port
J1
NC_Header 2x4_2.0mm
UART/IIC
J5
NC_SIP 2x4_2.0mm
GPIO Definition
JP2
NC_SIP-2P
HWP
(1:normal/0:enable)
JP1
FORCE-ROM
0: ROM code mode
JP3
Quick Erase for ISP
(1:normal/0:enable)
JP4
0:Legacy / 1:Toggle
Voltage Detector
Internal VDT for Host power
ZENER 5.6V
NC_BZT52C5V6S_SOD323
Internal VDT for DDR IO
Internal VDT for NF IO
External VDT for Host Power
U11
NC_S80840CNPF-B8M-G
External VDT for VCCF(Option)
U12
NC_S80827CNPF-B8M-G
SPI Flash
U13
NC_SST25VF032B
LED function
NC_RED LED
RED LED
DAS/DSS
DASP
CH0
CH1
CH2
CH3
Controller
IC1
SM2246EN-AA-BGA288-4CH-8CE
Silicon Motion, INC.
PageTitle
Main_BGA288_2.5INCH
DOC.Number
<Doc>
Sch.FileName
SM2246AA_BGA288_2.5INCH_BGA152X16_DB_V20
Date:
Tuesday, October 21, 2014
Sheet
2
of
7
Rev
20

SM2246AA Bypass Capacitors

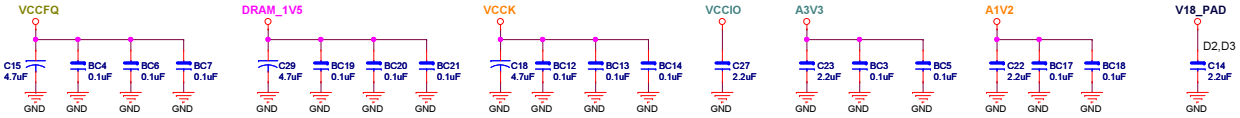

V18_PAD = SM2246 internal LDO Vout

V18_PAD = SM2246 Internal 1.8V LDO Vout
A3V3= 3.0 / 3.3 / 3.6 (V) For AIP power
A1V2=VDDTX_PHY=VDDRX_PHY= 1.14 / 1.2 / 1.26 (V) For AIP power
VCCK = 1.2 (V) For SM2246AA core power
VCC = 3.3 / 1.8 (V) For General IO power
VCCF = 3.3 (V) For NAND flash Core Power
VCCFQ = 3.3 / 1.8 (V) For NAND flash IO Power
DRAM_1V5 = 1.5 / 1.8 (V) For DRAM Power

OVP Circuit

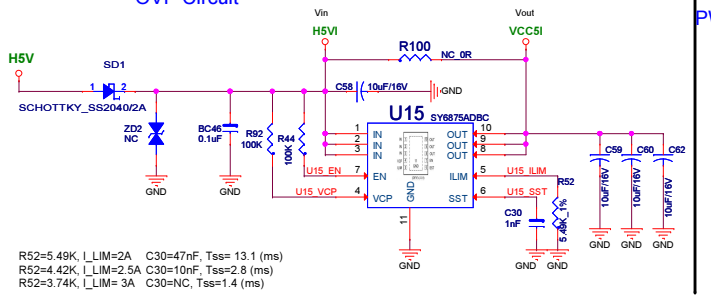

R52=5.49K, I_LIM=2A C30=47nF, Tss= 13.1 (ms)
R52=4.42K, I_LIM=2.5A C30=10nF, Tss=2.8 (ms)
R52=3.74K, I_LIM= 3A C30=NC, Tss=1.4 (ms)

PWM_2 for Flash Die Power 3.3V

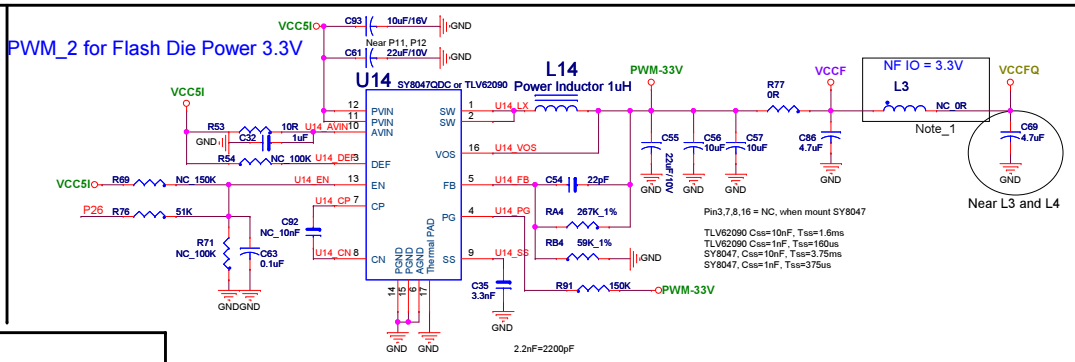

Pin3,7,8,16 = NC, when mount SY8047

TLV62090 Css=10nF, Tss=1.6ms
TLV62090 Css=1nF, Tss=160us
SY8047, Css=10nF, Tss=3.75ms
SY8047, Css=1nF, Tss=375us

PWM_1 for VCCK/A1V2 1.2V

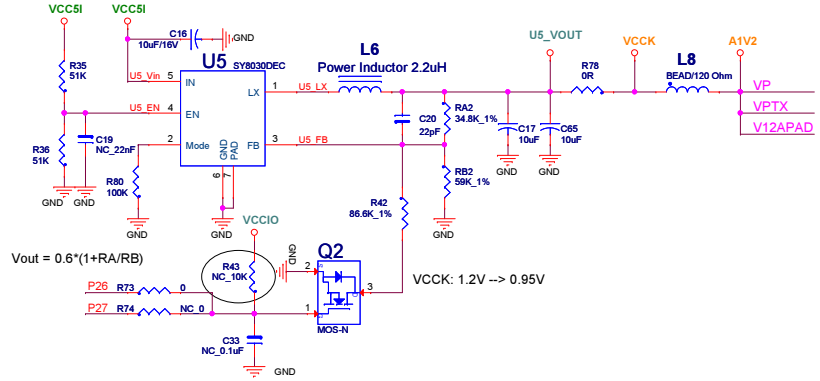

PWM_3 for Flash I/O 1.8V

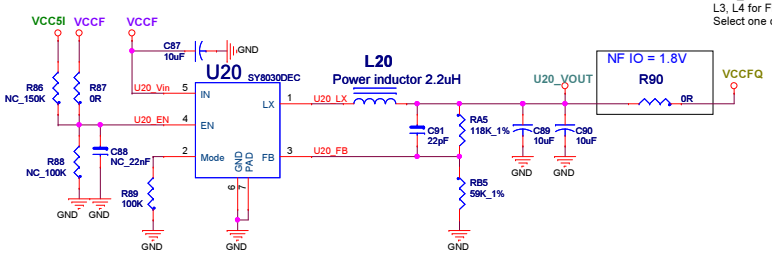

Note_1:
L3, L4 for Flash IO power
Select one of them

PWM_4 for DRAM-DDR3 1.5V

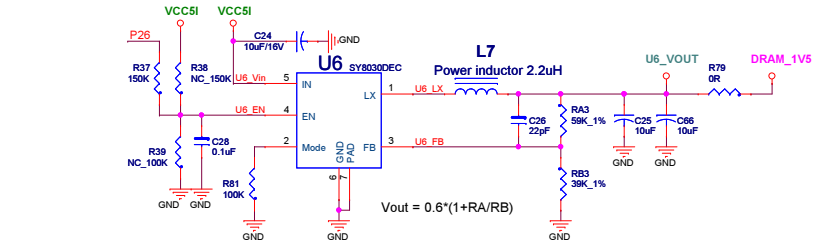

LDO_2: Analog Power 3.3V

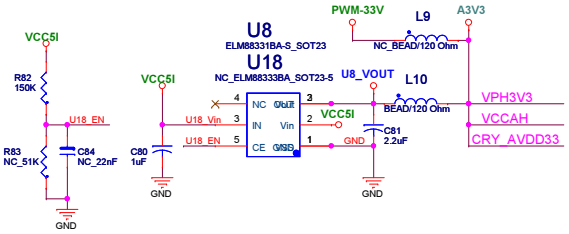

LDO_3: VCCIO Power 1.8V

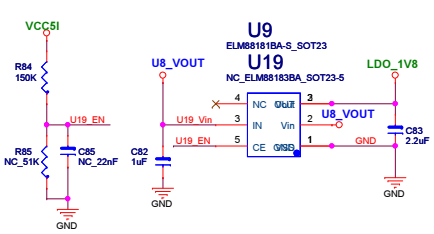

Note_2

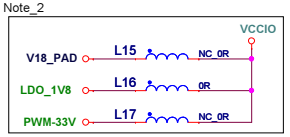

Note_2:
VCCIO(GPIO VCC) power supply option circuit
1.With DEVSLP Low Power SPEC
Flash I/O =3.3V, select L16 or L15
Flash I/O =1.8V, select L16

2.Without DEVSLP Low Power SPEC
Flash IO=3.3V or 1.8V, Select L17

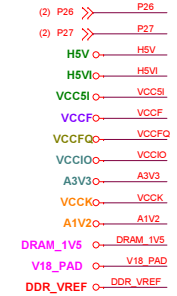

Silicon Motion, INC.

PageTitle	Power_Host_5V
DOC.Number	<Doc>
Sch.FileName	SM2246AA_BGA288_2.5INCH_BGA152X16_DB_V20
Rev	20
Date:	Tuesday, October 21, 2014
Sheet	3 of 7

Channel 0 & 1

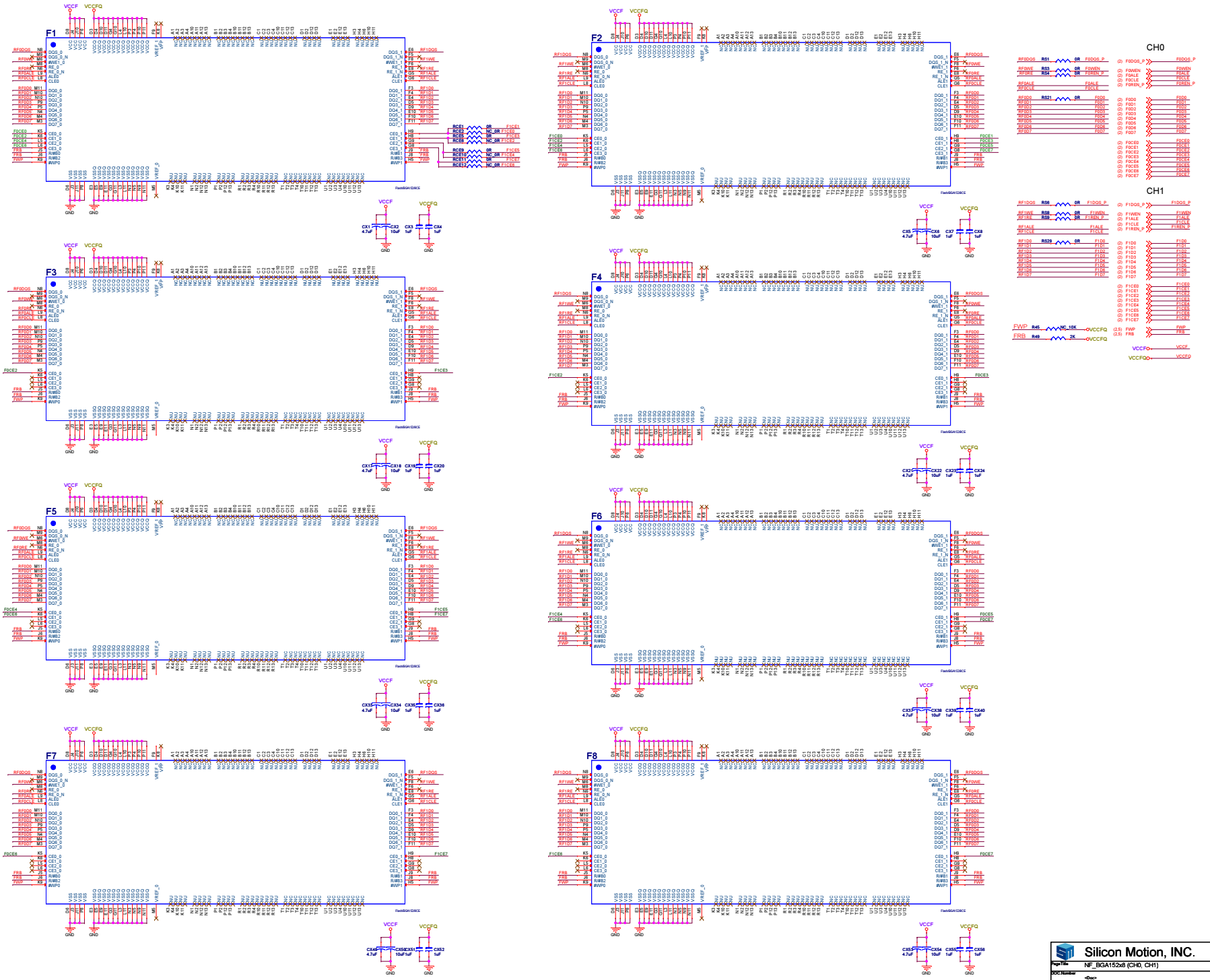
F1
F2
F3
F4
F5
F6
F7
F8
CH0
CH1
VCCF
VCCFQ
GND
Silicon Motion, INC.
NF_BGA152x8 (CH0, CH1)
SM2246AA_BGA288_2.5INCH_BGA152X16_DB_V20
Tuesday, October 21, 2014

Channel 2 & 3

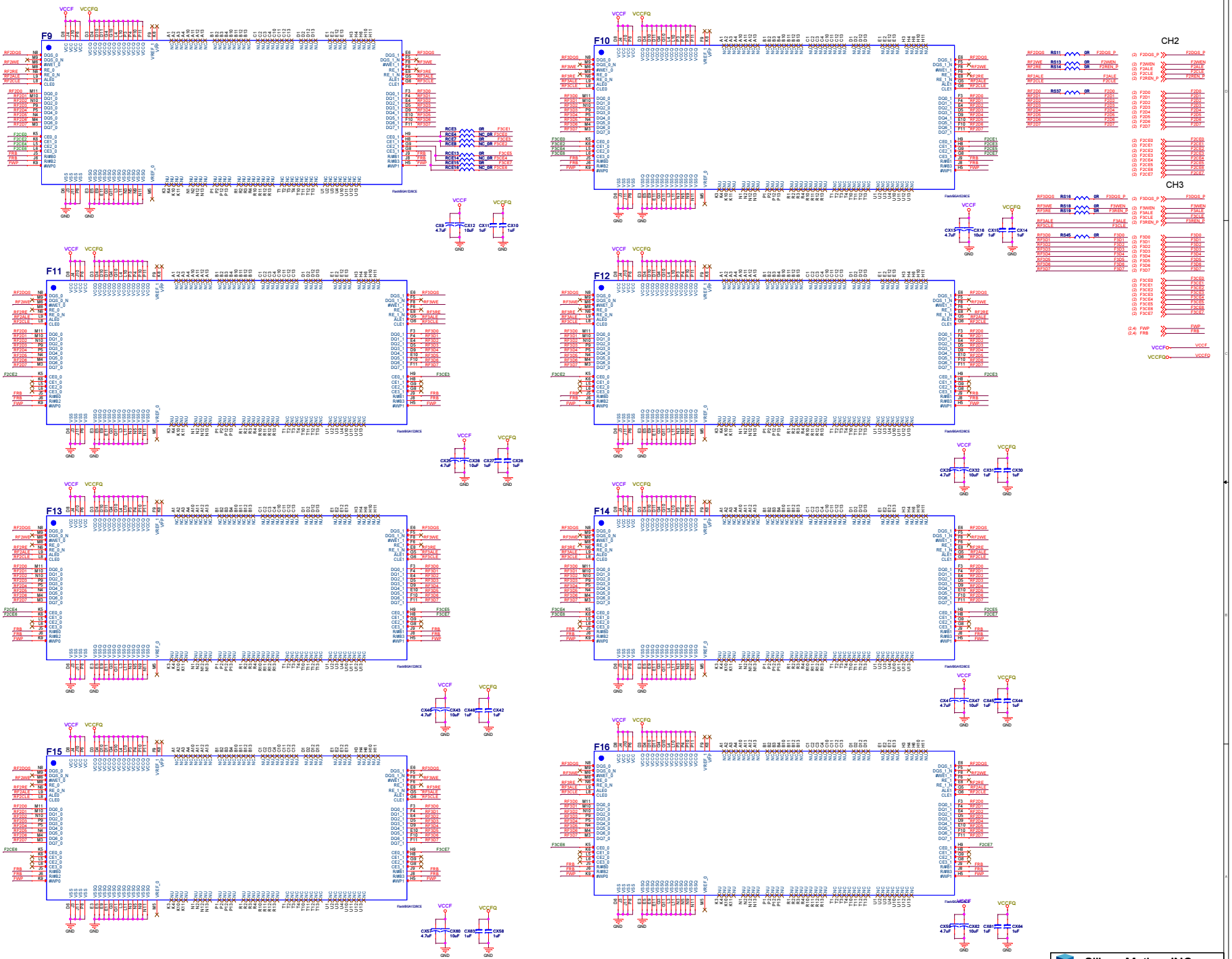

Silicon Motion, INC.

Page Title	NF_BGA152x8 (CH2, CH3)
DOC Number	<Doc>
Sch.FileName	SM2246AA_BGA288_2.5INCH_BGA152X16_D8_V20
Rev	20
Date:	Tuesday, October 21, 2014
Sheet	5 of 7

DRAM-DDR3

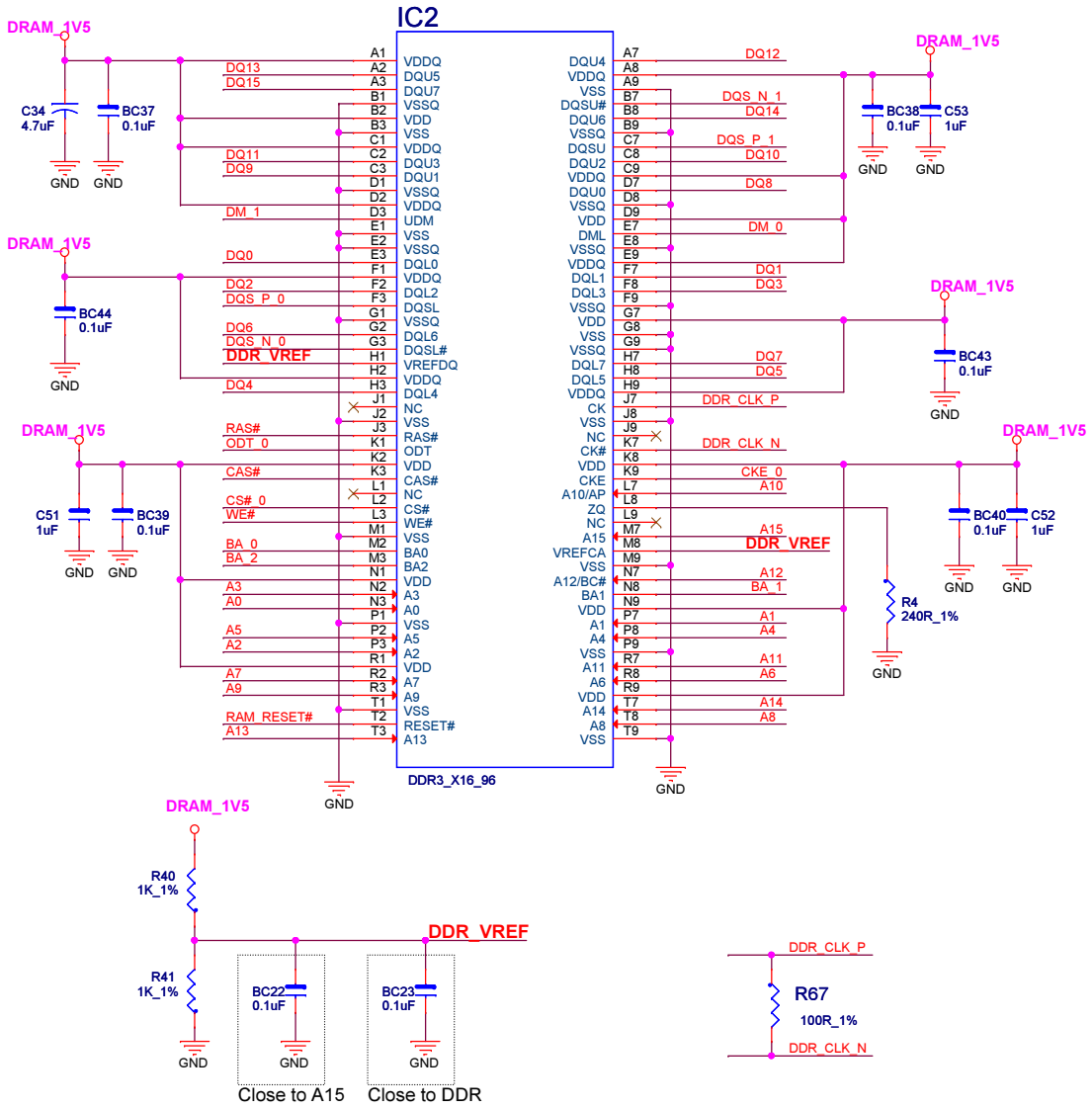

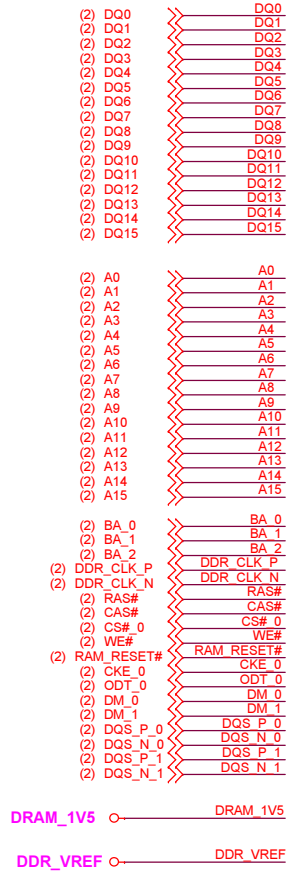

Silicon Motion, INC.	
PageTitle	DRAM_DDR3
DOC.Number	<Doc>
Sch.FileName	SM2246AA_BGA288_2.5INCH_BGA152X16_DB_V20
Rev	20
Date: Tuesday, October 21, 2014	Sheet 6 of 7

NAND FLASH Mounting Guide

2.5INCH BGA152x16 NAND Flash Mounting Guide

NAND Flash Type	F1	F2	F3	F4	F5	F6	F7	F8	F9	F10	F11	F12	F13	F14	F15	F16	NF Config.	RCE1	RCE2	RCE3	RCE4	RCE5	RCE6	RCE7	RCE8	RCE9	RCE10	RCE11	RCE12	RCE13	RCE14	RCE15	RCE16	CE useage
Single CE flash x1	◎	X	X	X	X	X	X	X	X	X	X	X	X	X	X	X	1CH/1CE	△	△	△	△	△	△	△	△	△	△	△	△	△	△	△	△	CE0
Single CE flash x2	◎	◎	X	X	X	X	X	X	X	X	X	X	X	X	X	X	2CH/1CE	△	△	△	△	△	△	△	△	△	△	△	△	△	△	△	△	CE0
Single CE flash x3	◎	◎	X	X	X	X	X	X	◎	X	X	X	X	X	X	X	3CH/1CE	△	△	△	△	△	△	△	△	△	△	△	△	△	△	△	△	CE0
Single CE flash x4	◎	◎	X	X	X	X	X	X	◎	◎	X	X	X	X	X	X	4CH/1CE	△	△	△	△	△	△	△	△	△	△	△	△	△	△	△	△	CE0
Single CE flash x8	◎	◎	X	X	◎	◎	X	X	◎	◎	X	X	◎	◎	X	X	4CH/2CE	△	△	△	△	△	△	△	△	△	△	△	△	△	△	△	△	CE0,CE4
Single CE flash x16	◎	◎	◎	◎	◎	◎	◎	◎	◎	◎	◎	◎	◎	◎	◎	◎	4CH/4CE	△	△	△	△	△	△	△	△	△	△	△	△	△	△	△	△	CE0,CE2,CE4,CE6
Dual CE flash x1	◎	X	X	X	X	X	X	X	X	X	X	X	X	X	X	X	2CH/1CE	X	◎	△	△	△	△	△	△	△	△	△	△	△	△	△	△	CE0
Dual CE flash x2	◎	◎	X	X	X	X	X	X	X	X	X	X	X	X	X	X	2CH/2CE	◎	X	△	△	△	△	△	△	△	△	△	△	△	△	△	△	CE0,CE1
Dual CE flash x2	◎	X	X	X	X	X	X	X	◎	X	X	X	X	X	X	X	4CH/1CE	X	◎	X	◎	△	△	△	△	△	△	△	△	△	△	△	△	CE0
Dual CE flash x4	◎	◎	X	X	X	X	X	X	◎	◎	X	X	X	X	X	X	4CH/2CE	◎	X	◎	X	△	△	△	△	△	△	△	△	△	△	△	△	CE0,CE1
Dual CE flash x8	◎	◎	X	X	◎	◎	X	X	◎	◎	X	X	◎	◎	X	X	4CH/4CE	◎	X	◎	X	△	△	△	△	△	△	△	△	△	△	△	△	CE0,CE1,CE4,CE5
Dual CE flash x16	◎	◎	◎	◎	◎	◎	◎	◎	◎	◎	◎	◎	◎	◎	◎	◎	4CH/8CE	◎	X	◎	X	△	△	△	△	△	△	△	△	△	△	△	△	CE0,CE1,CE2,CE3 CE4,CE5,CE6,CE7
																										△	△	△	△	△	△	△	△	
Quad CE flash x1	◎	X	X	X	X	X	X	X	X	X	X	X	X	X	X	X	2CH/2CE	X	◎	△	△	X	◎	△	△	△	△	△	△	△	△	△	△	CE0,CE2
Quad CE flash x2	◎	◎	X	X	X	X	X	X	X	X	X	X	X	X	X	X	2CH/4CE	◎	X	△	△	◎	X	△	△	△	△	△	△	△	△	△	△	CE0,CE1,CE2,CE3
Quad CE flash x2	◎	X	X	X	X	X	X	X	◎	X	X	X	X	X	X	X	4CH/2CE	X	◎	X	◎	X	◎	X	◎	△	△	△	△	△	△	△	△	CE0,CE2
Quad CE flash x4	◎	◎	X	X	X	X	X	X	◎	◎	X	X	X	X	X	X	4CH/4CE	◎	X	◎	X	◎	X	◎	X	△	△	△	△	△	△	△	△	CE0,CE1,CE2,CE3
Quad CE flash x8	◎	◎	X	X	◎	◎	X	X	◎	◎	X	X	◎	◎	X	X	4CH/8CE	◎	X	◎	X	◎	X	◎	X	△	△	△	△	△	△	△	△	CE0,CE1,CE2,CE3 CE4,CE5,CE6,CE7
8 CE flash x1	◎	X	X	X	X	X	X	X	X	X	X	X	X	X	X	X	2CH/4CE	X	◎	X	◎	X	◎	X	◎	△	△	△	△	△	△	△	△	CE0,CE2,CE4,CE6
8 CE flash x2	◎	X	X	X	X	X	X	X	◎	X	X	X	X	X	X	X	4CH/4CE	X	◎	X	◎	X	◎	X	◎	X	◎	X	◎	X	◎	X	◎	CE0,CE2,CE4,CE6
8 CE flash x4	◎	◎	X	X	X	X	X	X	◎	◎	X	X	X	X	X	X	4CH/8CE	◎	X	◎	X	◎	X	◎	X	◎	X	◎	X	◎	X	◎	X	◎	CE0,CE1,CE2,CE3 CE4,CE5,CE6,CE7

M1023A

◎	Install
X	un-install
△	Don't care (it is fine if resistor mouning or not.)

TOP View For Flash PCB Placement (SMI DEMO BOARD V20)

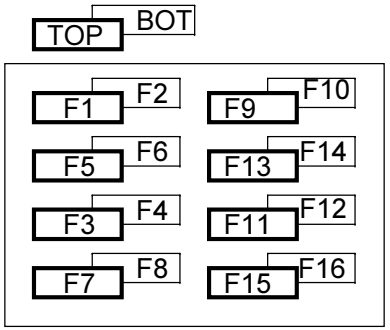

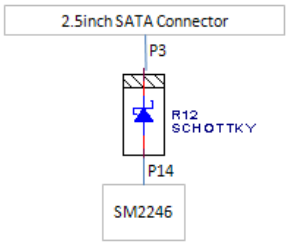

Silicon Motion, INC.

PageTitle	NF_Mounting_Guide
DOC.Number	<Doc>
Sch.FileName	SM2246AA_BGA288_2.5INCH_BGA152X16_DB_V20
Rev	20
Date:	Thursday, November 06, 2014
Sheet	7 of 7