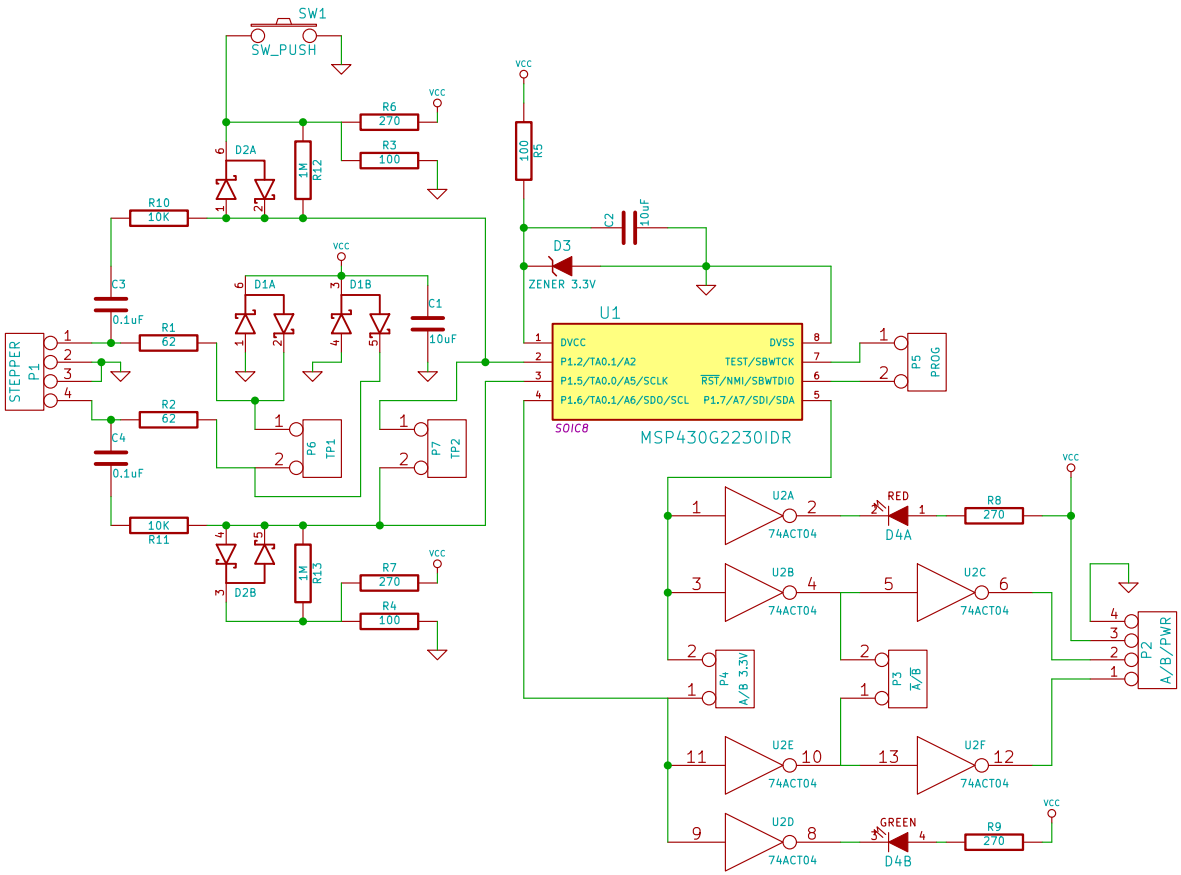

Protoplant Inc.		
File: stepperature.sch		
Sheet: /		
Title: Stepperature		
Size: USLetter	Date: 17 mar 2013	Rev: 3
KiCad E.D.A.		Id: 1/1