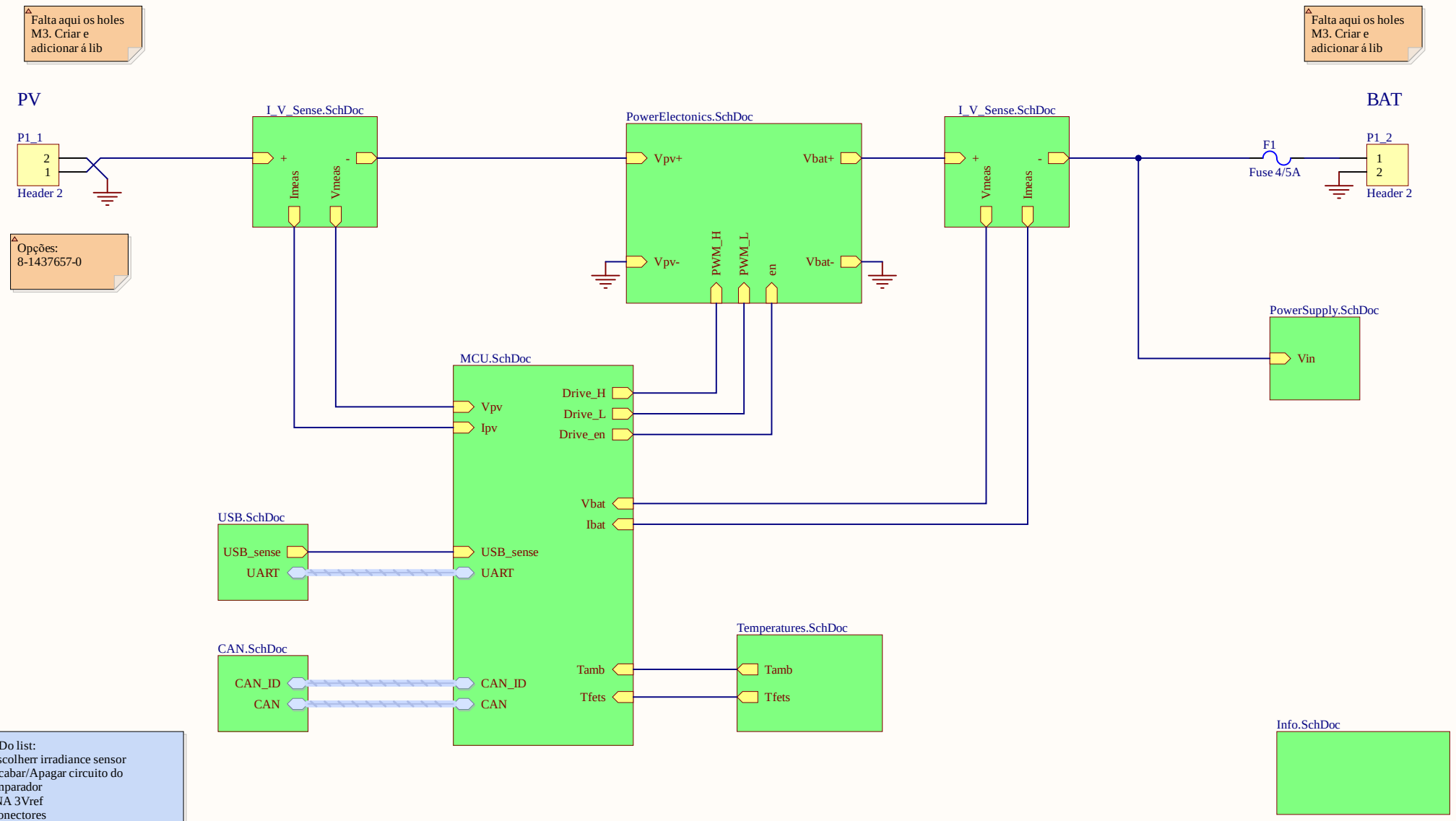

To Do list:
- Escolherr irradiance sensor
- Acabar/Apagar circuito do comparador
- INA 3Vref
- Conectores
- Confiirmar como se realiza o dead time
- Confirmar pinout

Comments

TO DO/FIX

Title: Top sheet	
Project: MPPT V1 Afonso.PrjPcb	Version: 1
Date: 4/22/2026	Author: Afonso Coelho
Company: Técnico Solar Boat	
File: TopLevel.SchDoc	Page: 1 of 10

TÉCNICO SOLAR BOAT

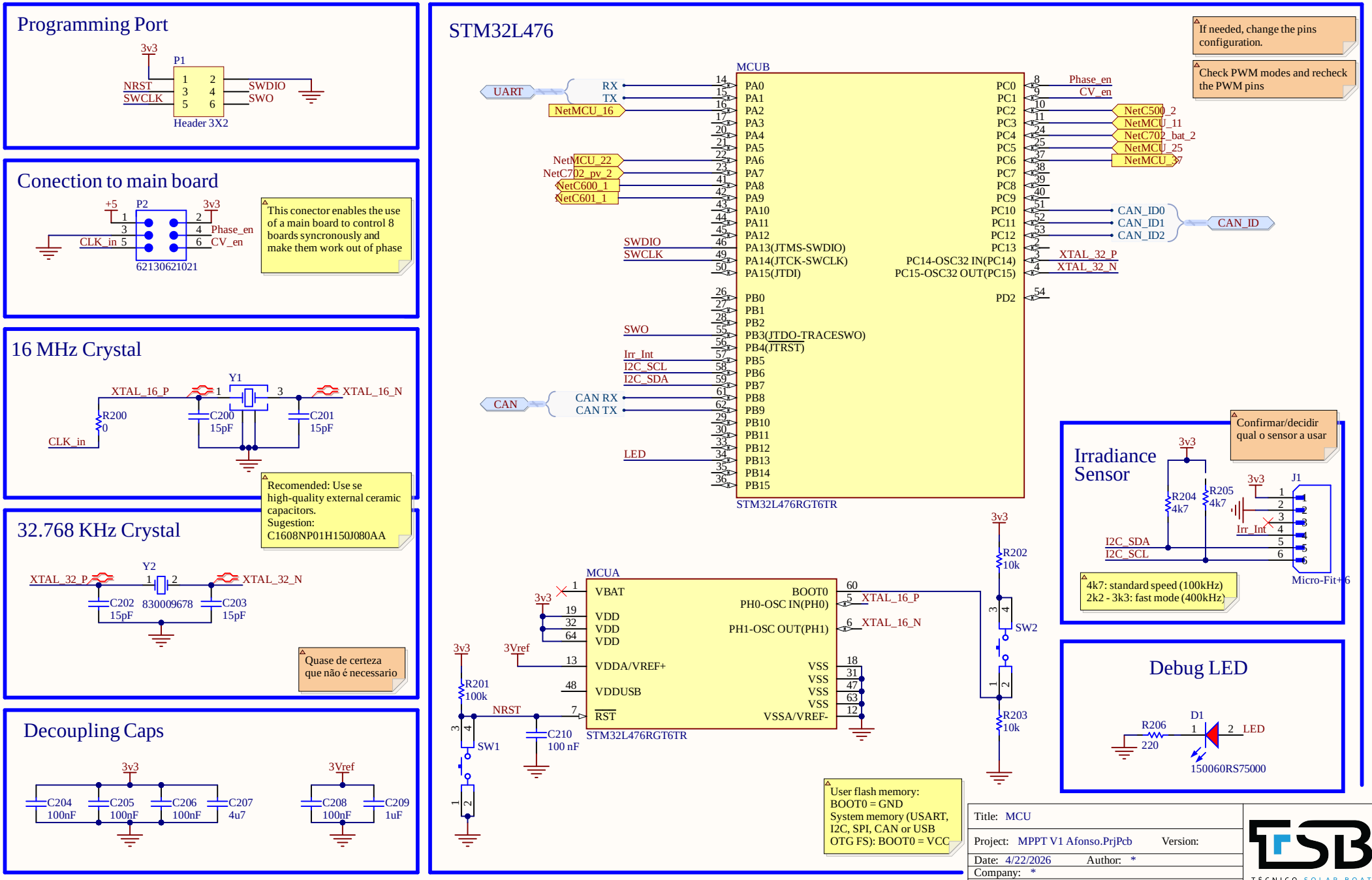
Programming Port
3v3
P1
NRST
SWCLK
SWDIO
SWO
Header 3X2
Conection to main board
+5
P2
3v3
CLK_in
Phase_en
CV_en
62130621021
This conector enables the use of a main board to control 8 boards syncronously and make them work out of phase
16 MHz Crystal
Y1
XTAL_16_P
XTAL_16_N
R200
0
CLK_in
C200
15pF
C201
15pF
Recomended: Use se high-quality external ceramic capacitors.
Sugestion:
C1608NP01H150J080AA
32.768 KHz Crystal
Y2
XTAL_32_P
XTAL_32_N
C202
15pF
830009678
C203
15pF
Quase de certeza que não é necessario
Decoupling Caps
3v3
C204
100nF
C205
100nF
C206
100nF
C207
4u7
3Vref
C208
100nF
C209
1uF
STM32L476
If needed, change the pins configuration.
Check PWM modes and recheck the PWM pins
MCUB
UART
RX
TX
NetMCU_16
NetMCU_22
NetC702_pv_2
NetC600_1
NetC601_1
SWDIO
SWCLK
SWO
Irr_Int
I2C_SCL
I2C_SDA
CAN
CAN RX
CAN TX
LED
PA0
PA1
PA2
PA3
PA4
PA5
PA6
PA7
PA8
PA9
PA10
PA11
PA12
PA13(JTMS-SWDIO)
PA14(JTCK-SWCLK)
PA15(JTDI)
PB0
PB1
PB2
PB3(JTDO-TRACESWO)
PB4(JTRST)
PB5
PB6
PB7
PB8
PB9
PB10
PB11
PB12
PB13
PB14
PB15
PC0
PC1
PC2
PC3
PC4
PC5
PC6
PC7
PC8
PC9
PC10
PC11
PC12
PC13
PC14-OSC32 IN(PC14)
PC15-OSC32 OUT(PC15)
PD2
Phase_en
CV_en
NetC500_2
NetMCU_11
NetC702_bat_2
NetMCU_25
NetMCU_37
CAN_ID0
CAN_ID1
CAN_ID2
CAN_ID
XTAL_32_P
XTAL_32_N
STM32L476RGT6TR
MCUA
VBAT
VDD
VDD
VDD
VDDA/VREF+
VDDUSB
RST
BOOT0
PH0-OSC IN(PH0)
PH1-OSC OUT(PH1)
VSS
VSS
VSS
VSS
VSSA/VREF-
XTAL_16_P
XTAL_16_N
STM32L476RGT6TR
3v3
3Vref
R201
100k
NRST
SW1
C210
100 nF
R202
10k
SW2
R203
10k
User flash memory:
BOOT0 = GND
System memory (USART, I2C, SPI, CAN or USB OTG FS): BOOT0 = VCC
Irradiance Sensor
Confirmar/decidir qual o sensor a usar
3v3
R204
4k7
R205
4k7
Irr_Int
I2C_SDA
I2C_SCL
J1
Micro-Fit+6
4k7: standard speed (100kHz)
2k2 - 3k3: fast mode (400kHz)
Debug LED
R206
220
D1
LED
150060RS75000
Title: MCU
Project: MPPT V1 Afonso.PrjPcb
Version:
Date: 4/22/2026
Author: *
Company: *
File: MCU.SchDoc
Page:2 of 10
TECNICO SOLAR BOAT

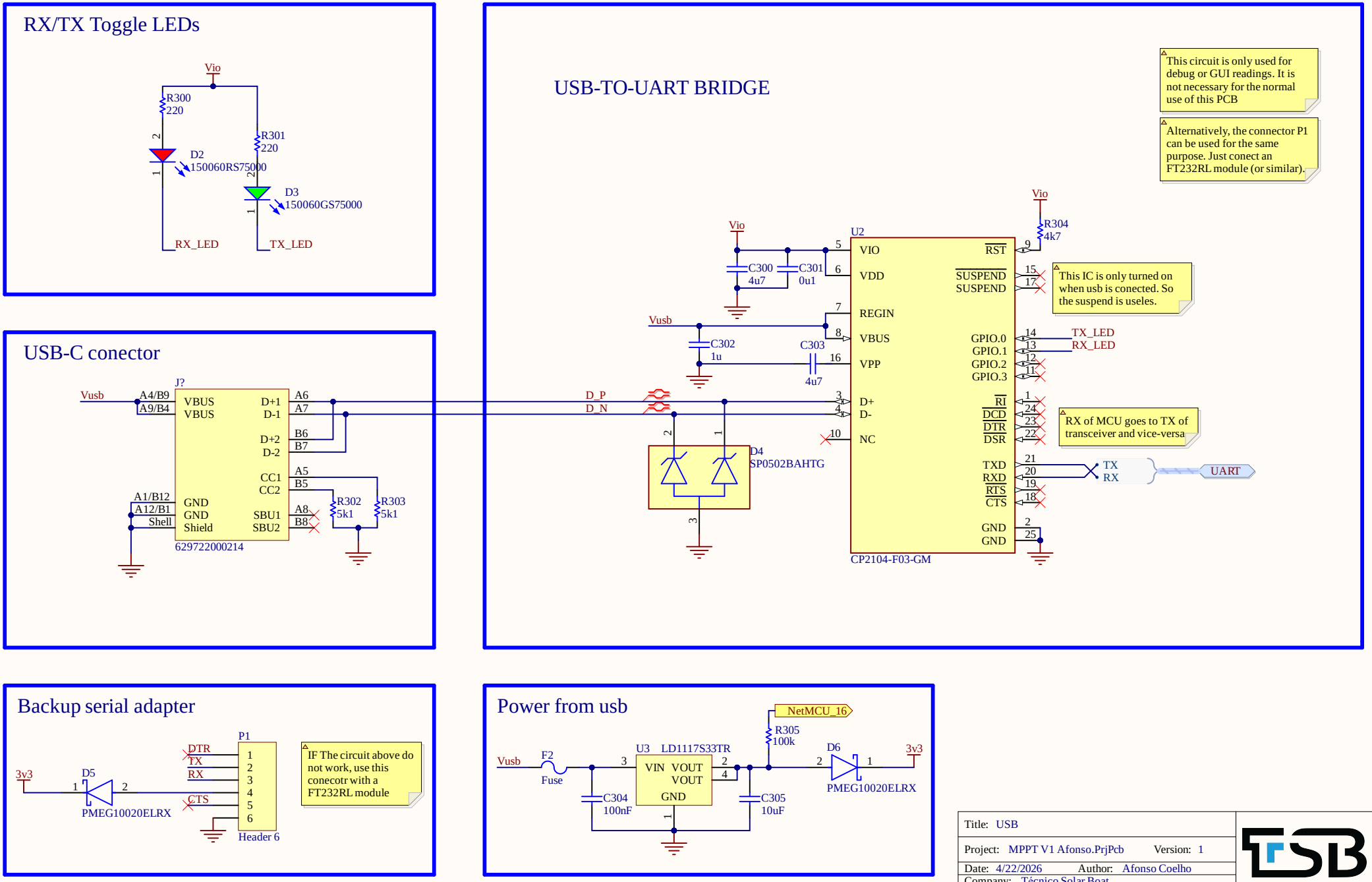

Title: USB	
Project: MPPT V1 Afonso.PrjPcb	Version: 1
Date: 4/22/2026	Author: Afonso Coelho
Company: Técnico Solar Boat	
File: USB.SchDoc	Page:3 of 10

TÉCNICO SOLAR BOAT

The CAN_ID pins will help number the boards. They will only be used if a motherboard is built/used.

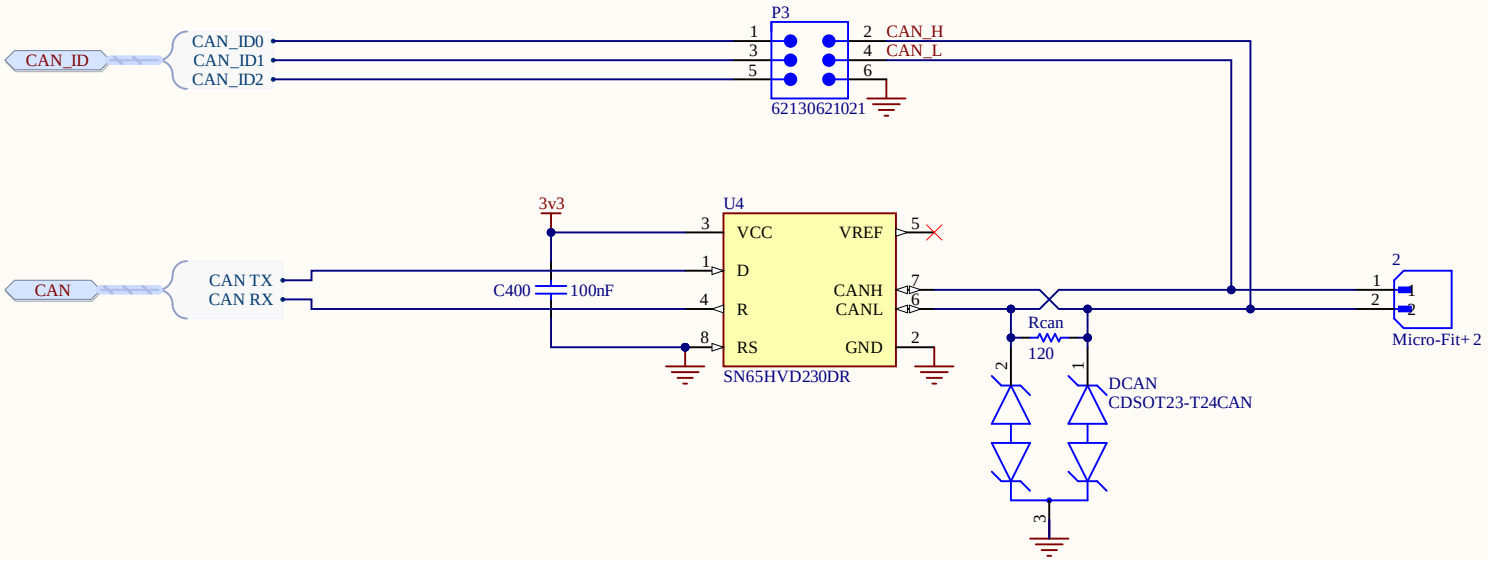

Title: CAN	
Project: MPPT V1 Afonso.PrjPcb Version: 1	
Date: 4/22/2026 Author: Afonso Coelho	
Company: Técnico Solar Boat	
File: CAN.SchDoc Page:4 of 10	

TÉCNICO SOLAR BOAT

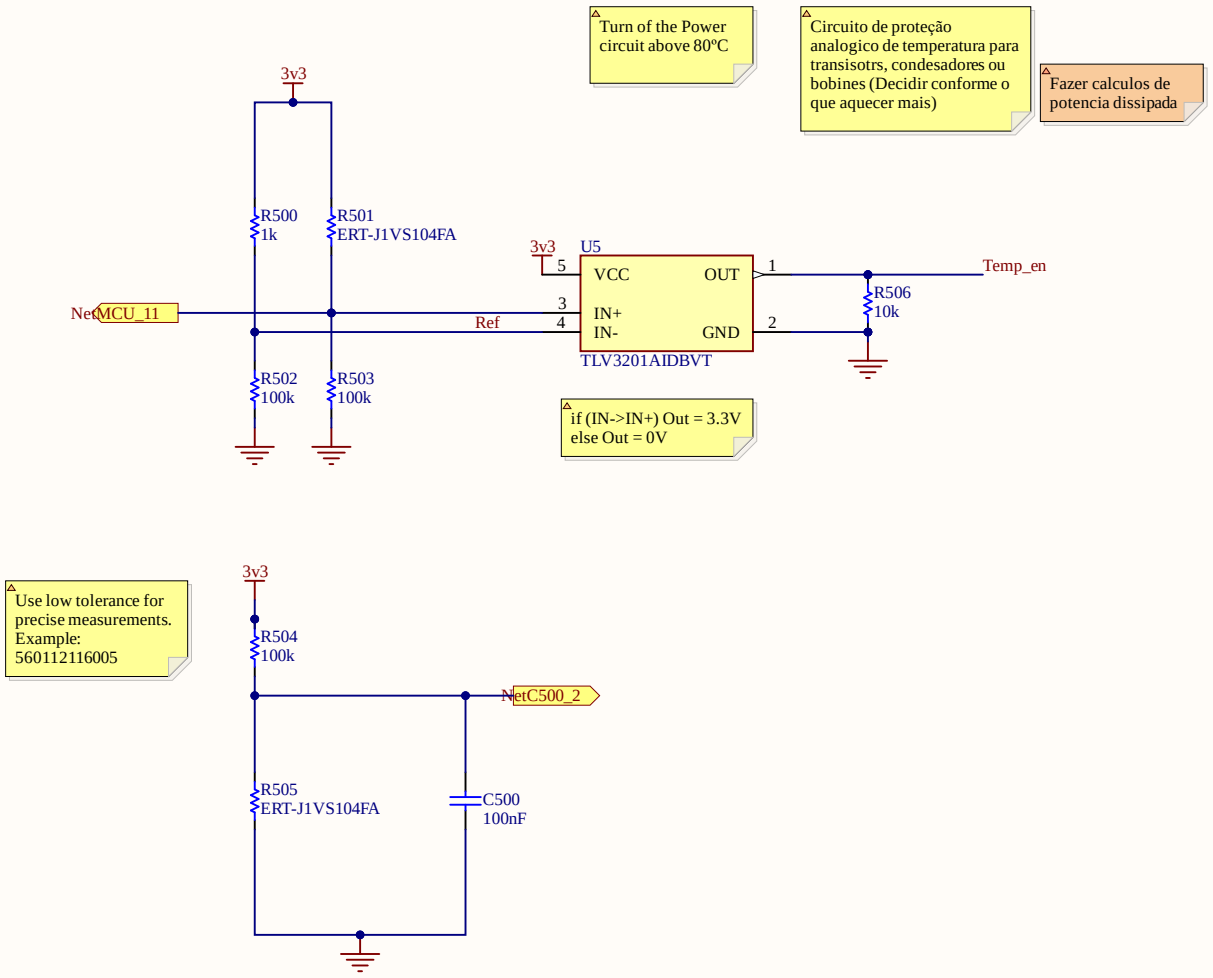

Title: Temperatures	
Project: MPPT V1 Afonso.PrjPcb Version: 1	
Date: 4/22/2026 Author: Afonso Coelho	
Company: Técnico Solar Boat	
File: Temperatures.SchDoc Page:5 of 10	

TÉCNICO SOLAR BOAT

Synchronous boost

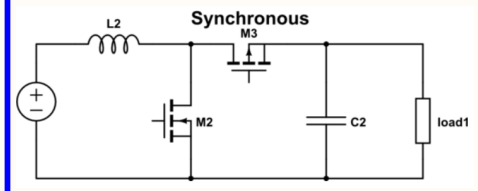

Double check the capacitors and inducotr values after simulatios

Add an heat sink. It should not be needed but it is bether to prevent redesign

Confirmar como realizar o dead time. Há uma implementação com portas ands. Não sei se é necessario ou não

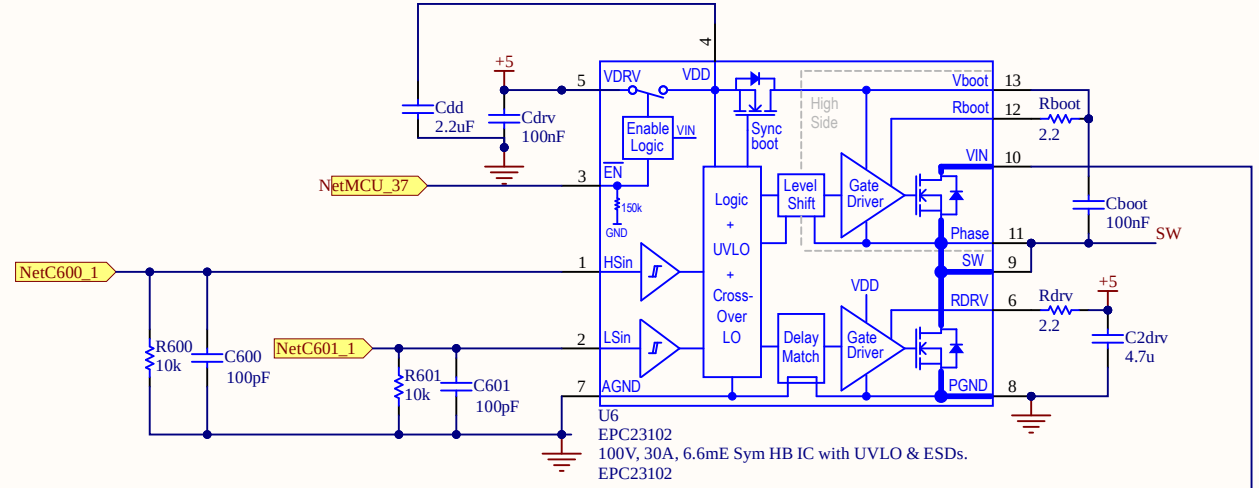

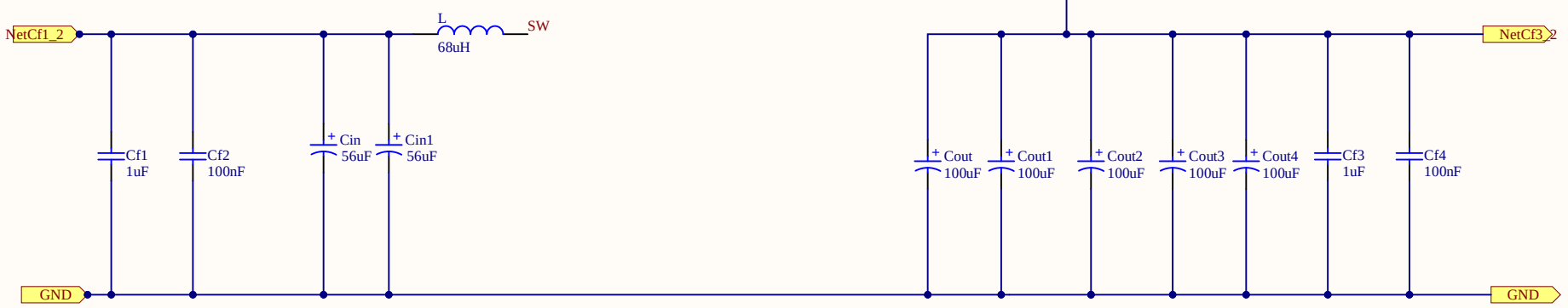

Não há em stock dos de 220uF

Title: Power Electonics	
Project: MPPT V1 Afonso.PrjPcb	Version: 1
Date: 4/22/2026	Author: Afonso Coelho
Company: Técnico Solar Boat	
File: PowerElectonics.SchDoc	Page:6 of 10

TÉCNICO SOLAR BOAT

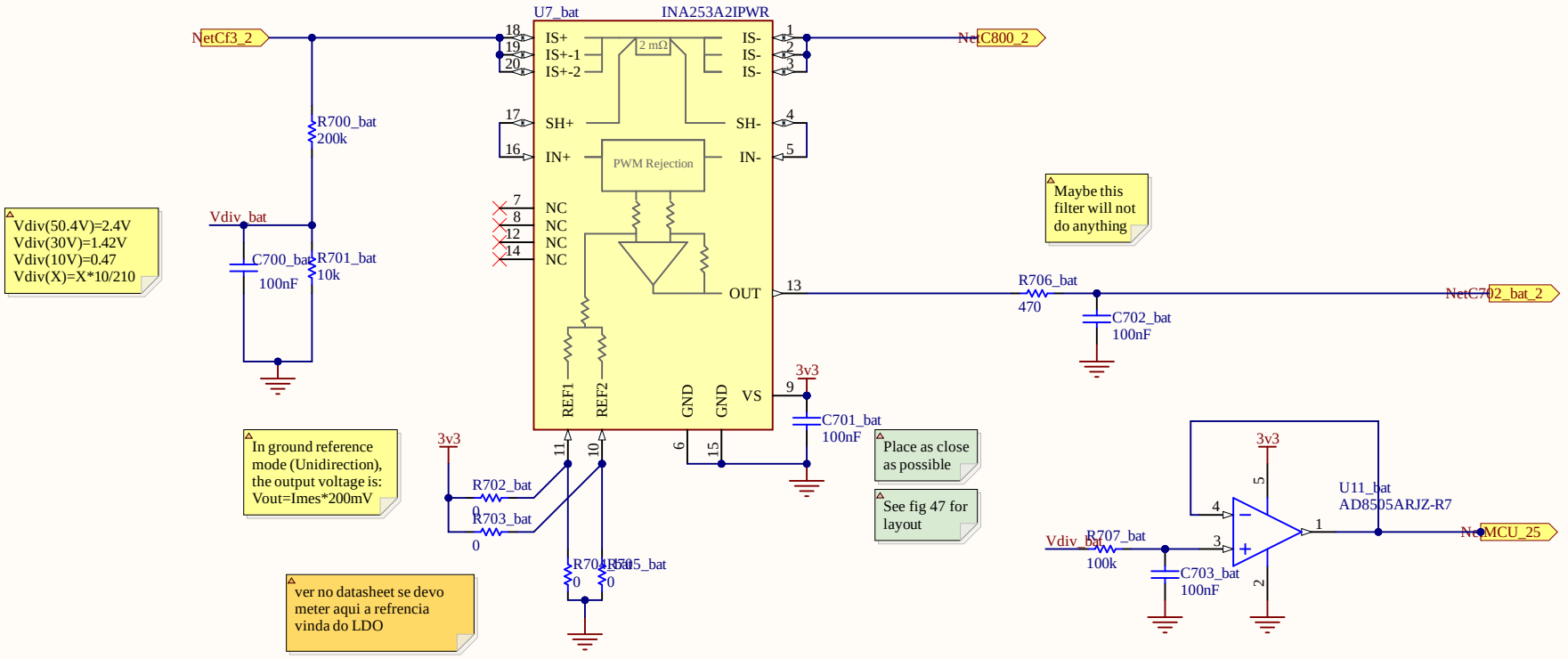

Title: Current and Voltage Sensor	
Project: MPPT V1 Afonso.PrjPcb Version: 1	
Date: 4/22/2026 Author: Afonso Coelho	
Company: Técnico Solar Boat	
File: I_V_Sense.SchDoc Page: 7.1 of 10	

TÉCNICO SOLAR BOAT

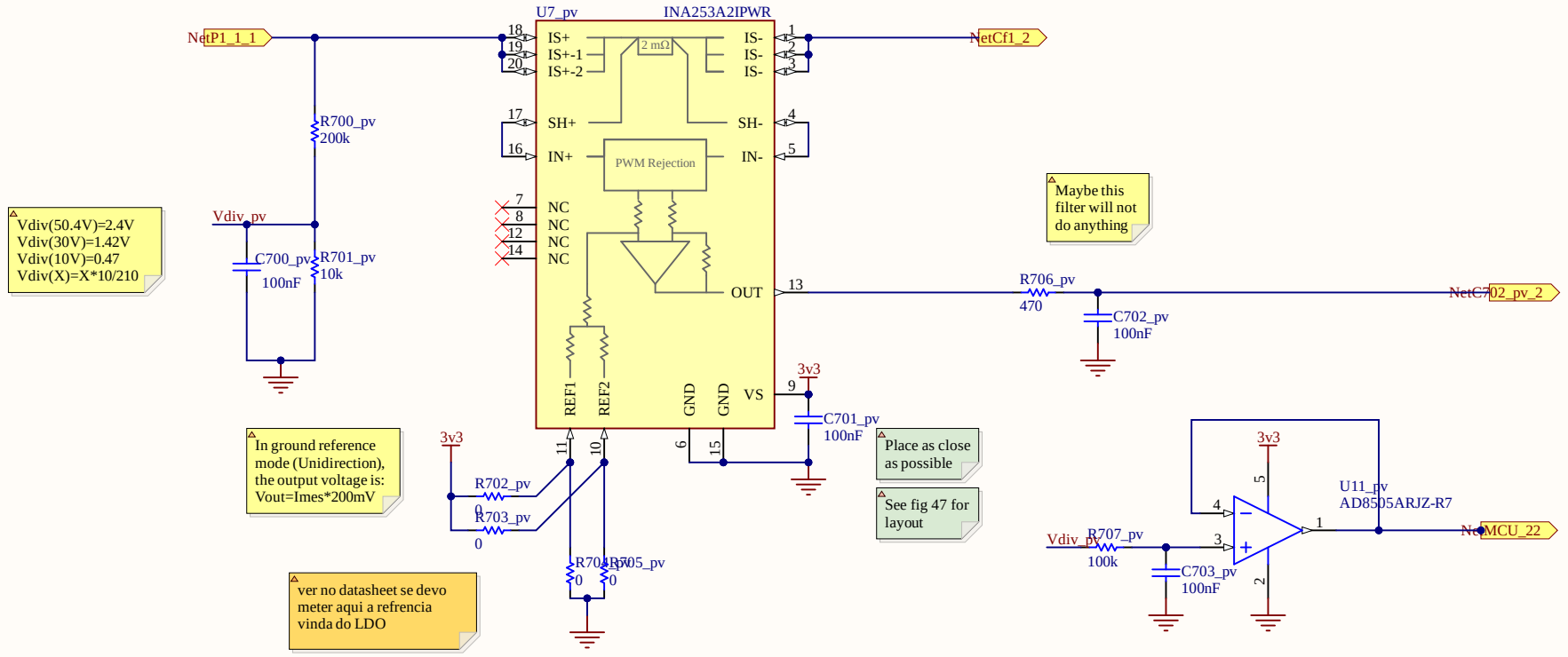

Title: Current and Voltage Sensor	
Project: MPPT V1 Afonso.PrjPcb Version: 1	
Date: 4/22/2026 Author: Afonso Coelho	
Company: Técnico Solar Boat	
File: I_V_Sense.SchDoc Page: 7.2 of 10	

TÉCNICO SOLAR BOAT

5V Supply

Max Current Output 350 mA

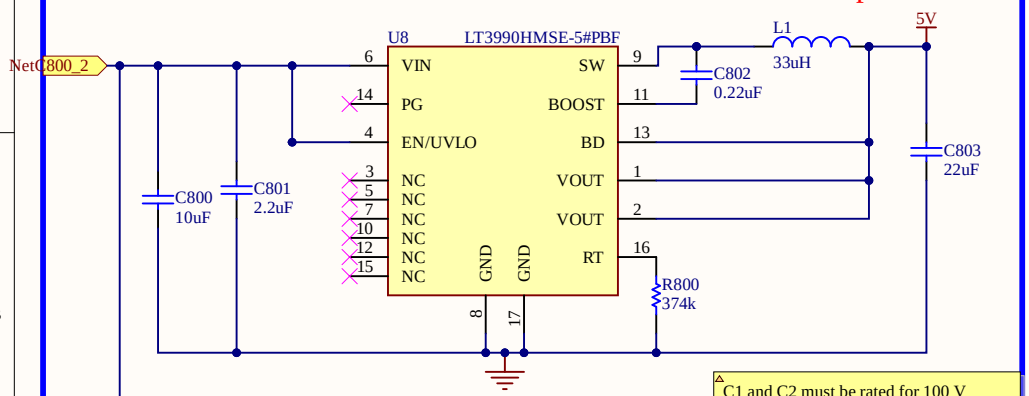

For evrythig:
2*INA253: 1.8 mA (Typical) 2.6 mA (Max)
CAN_transceiver: 10 mA (Typical) 17 mA (Max)
STM: 11 mA (Typical) ~20/30 mA (Max)
Total: 24.6 mA (Typical) 52.2 mA (Worst case)

INA253: 2.7V(Min) 5.5 (Max)
CAN_transceiver: 3 (MIN) 3.6 (MAX)
STM: 1.71 V (MIN) 3.6 (MAX)
Total: 3 V (MIN) 3.6 (MAX)

C1 and C2 must be rated for 100 V

C3 must be rated for 16 V

C4 must be rated for 10 V

3.3V Supply

Max Current Output 350 mA

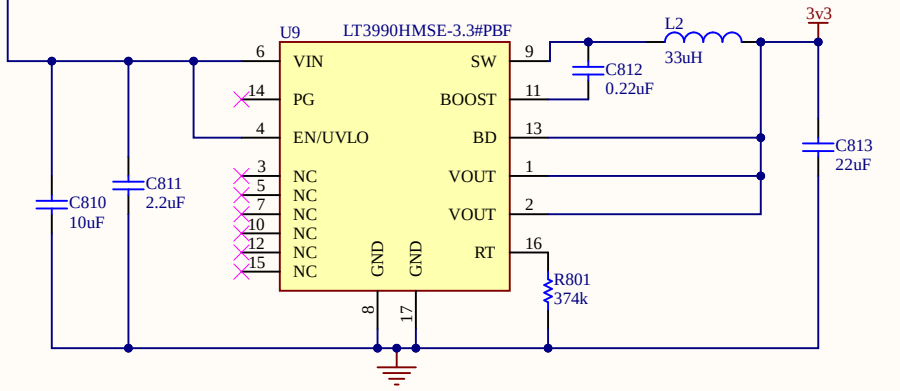

Only for EPC23102 (Transistors).
Uses only 16mA according to the datasheet.
Simulations show a initial peak aroun 50mA and a triangle wave form with min 16mA and max 24mA.

EPC23102: 4.75 V (Min) 5.5 V (MAX)

3V voltage reference

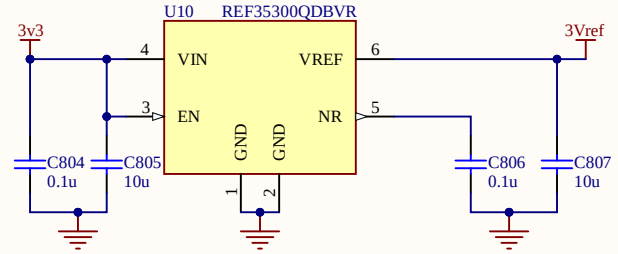

Title: Power Supply	
Project: MPPT V1 Afonso.PrjPcb	Version: 1
Date: 4/22/2026	Author: Afonso Coelho
Company: Técnico Solar Boat	
File: PowerSupply.SchDoc	Page:8 of 10

TÉCNICO SOLAR BOAT

STM32CubeMX

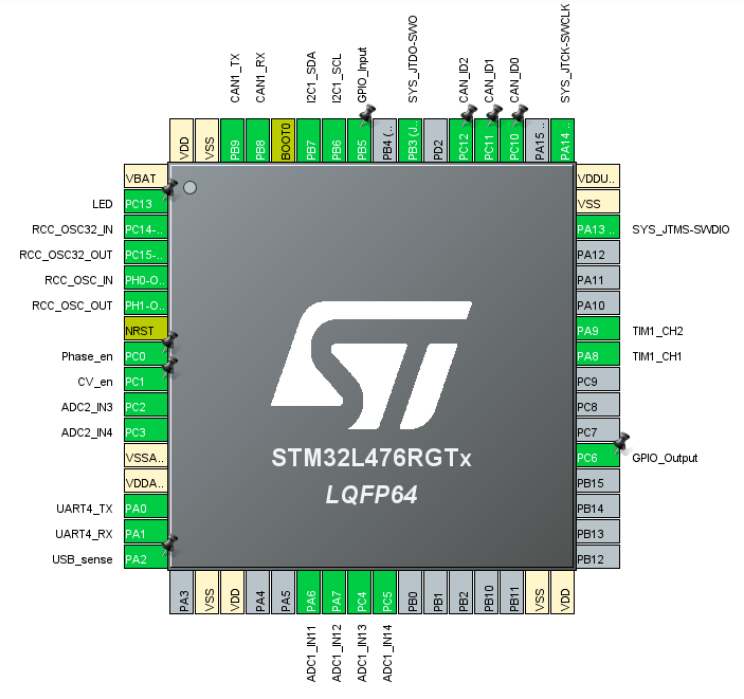

PCB

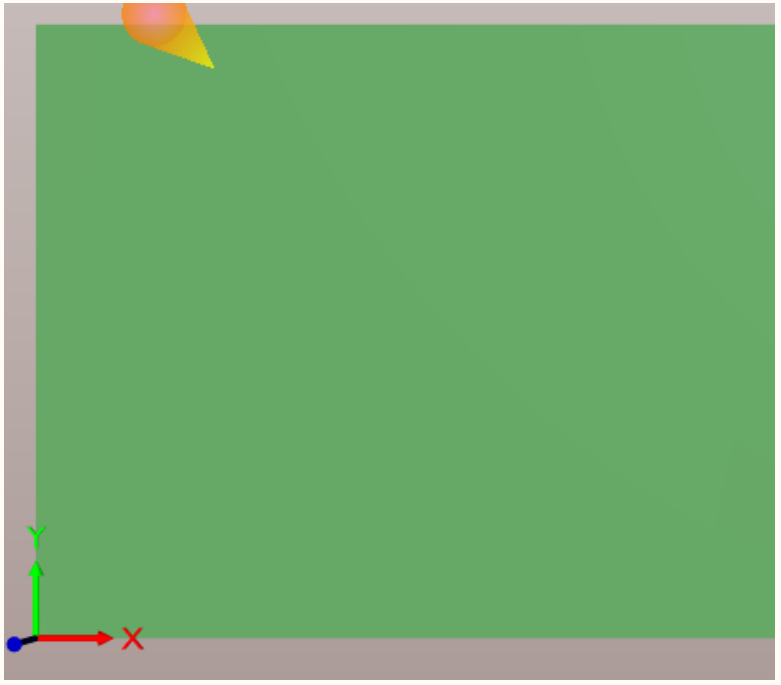

For detailed design thinking and results go to: GitHub

Title: Additional Information	
Project: MPPT V1 Afonso.PrjPcb Version: 1	
Date: 4/22/2026 Author: Afonso Coelho	
Company: Técnico Solar Boat	
File: Info.SchDoc Page:9 of 10	TÉCNICO SOLAR BOAT