Torrent 12FFC Multi-protocol PHY

TSMC 12FFC

Part #: SD0801

IP Rev: R130 - Doc Rev: 4.4

PHY Specification

May 30, 2023

CADENCE CONFIDENTIAL

© 1996-2023 Cadence Design Systems, Inc. All rights reserved.

Cadence Design Systems, Inc. (Cadence), 2655 Seely Ave., San Jose, CA 95134, USA.

Trademarks: Trademarks and service marks of Cadence Design Systems, Inc. contained in this document are attributed to Cadence with the appropriate symbol. For queries regarding Cadence's trademarks, contact the corporate legal department at the address shown above or call 800.862.4522. All other trademarks are the property of their respective holders.

Restricted Permission: This document is protected by copyright law and international treaties and contains trade secrets and proprietary information owned by Cadence. Unauthorized reproduction or distribution of this document, or any portion of it, may result in civil and criminal penalties. Except as specified in this permission statement, this document may not be copied, reproduced, modified, published, uploaded, posted, transmitted, or distributed in any way, without prior written permission from Cadence. This document contains the proprietary and confidential information of Cadence or its licensors, and is supplied subject to, and may be used only in accordance with, a written agreement between Cadence and its customer.

Unless otherwise agreed to by Cadence in writing, this statement grants Cadence customers permission to print one (1) hard copy of this document subject to the following conditions:

1. This document may not be modified in any way.
2. Any authorized copy of this document or portion thereof must include all original copyright, trademark, and other proprietary notices and this permission statement.
3. The information contained in this document cannot be used in the development of like products or software, whether for internal or external use, and shall not be used for the benefit of any other party, whether or not for consideration.

Disclaimer: INFORMATION IN THIS DOCUMENT IS SUBJECT TO CHANGE WITHOUT NOTICE AND DOES NOT REPRESENT A COMMITMENT ON THE PART OF CADENCE. EXCEPT AS MAY BE EXPLICITLY SET FORTH IN A WRITTEN AGREEMENT BETWEEN CADENCE AND ITS CUSTOMER, CADENCE DOES NOT MAKE, AND EXPRESSLY DISCLAIMS, ANY REPRESENTATIONS OR WARRANTIES AS TO THE COMPLETENESS, ACCURACY OR USEFULNESS OF THE INFORMATION CONTAINED IN THIS DOCUMENT. CADENCE DOES NOT WARRANT THAT USE OF SUCH INFORMATION WILL NOT INFRINGE ANY THIRD PARTY RIGHTS, AND CADENCE DISCLAIMS ALL IMPLIED WARRANTIES, INCLUDING MERCHANTABILITY AND FITNESS FOR A PARTICULAR PURPOSE. CADENCE DOES NOT ASSUME ANY LIABILITY FOR DAMAGES OR COSTS OF ANY KIND THAT MAY RESULT FROM USE OF SUCH INFORMATION. CADENCE CUSTOMER HAS COMPLETE CONTROL AND FINAL DECISION-MAKING AUTHORITY OVER ALL ASPECTS OF THE DEVELOPMENT, MANUFACTURE, SALE AND USE OF CUSTOMER'S PRODUCT, INCLUDING, BUT NOT LIMITED TO, ALL DECISIONS WITH REGARD TO DESIGN, PRODUCTION, TESTING, ASSEMBLY, QUALIFICATION, CERTIFICATION, INTEGRATION OF CADENCE PRODUCTS, INSTRUCTIONS FOR USE, LABELING AND DISTRIBUTION, AND CADENCE EXPRESSLY DISAVOWS ANY RESPONSIBILITY WITH REGARD TO ANY SUCH DECISIONS REGARDING CUSTOMER'S PRODUCT.

Restricted Rights: Use, duplication, or disclosure by the Government is subject to restrictions as set forth in FAR52.227-14 and DFAR252.227-7013 et seq. or its successor.

Table Of Contents

List Of Tables 5
List Of Figures 7
About this Document 9
1 PHY Overview 11
1.1 Features 11
2 PHY Pin List 14
2.1 Power Pin List 14
2.2 External Pin / Bump List 14
2.3 On-Chip/SoC Functional Pin List 14
2.4 Manufacturing Test And Diagnostics Related Pins 27
2.5 Un-supported PHY/PIPE Interface Signals 28
2.6 Digital Test Bus 29
3 Configuration 31
3.1 Multi-link / multi-protocol support 31
3.2 Multi-Lane Links 32
3.3 PHY PLL Configuration 32
3.4 PHY link configuration 33
4 PHY Clocking And Reset 34
4.1 APB And TAP Clocking And Reset 34
4.2 PSM and Reference Path Clocking 35
4.3 Data Path Clocking 36
4.4 Additional PHY clock outputs 39
4.4.1 MAC clock divider 39
4.5 PHY reset 40
4.6 Link reset 40
4.7 Tx Synchronous FIFO control 40
5 PHY Internal CDB Access 43
5.1 CDB Address Encoding 43
5.2 Top Level Register Address Space 44
5.3 PMA Setup 45
6 PHY TAP Complex 46
6.1 TAP Controller 46
6.2 Register Descriptions 46
6.3 PHY register read through TAP 47
6.4 PHY register write through TAP 47
7 PHY Register Descriptions 49
7.1 PHY and PCS Configuration and Control 49
7.2 PMA Configuration and Control 57
7.3 PHY and PMA Isolation 60
7.3.1 PHY isolation 60
7.3.2 PMA isolation 66
8 Testability 71
8.1 Scan 71
8.2 IDDQ 71
9 PHY Timing Specifications 72
9.1 General Timing Specifications 73
9.2 Power State Transition Timing Specification 74
9.3 PIPE PCS Transmit and Receive Latency 76
9.4 N-FTS 77
10 PHY Operation 78
10.1 Start-up Sequence Timing Diagram 78
10.2 PHY disable description 79

10.3 Disabling reference clock to PHY ... 80
10.4 Power state change ... 80
10.4.1 PIPE ... 80
10.4.2 Raw SerDes ... 89
10.4.3 PHY/PMA common logic powerdown ... 90
10.5 Data Rate change ... 90
10.5.1 PIPE interface ... 90
10.5.2 Raw SerDes interface ... 90
10.6 Changing the mode of operation when using the Raw SerDes interface ... 91
10.7 Transmit Data Path Timing Diagrams ... 92
10.8 Receiver detection ... 93
10.8.1 PIPE (PCIe or USB) ... 93
10.8.2 Raw SerDes ... 94
10.9 Transmit deemphasis ... 94
10.10 Receive Data Path Timing Diagrams ... 95
10.11 Transmitter Equalization Timing Diagrams ... 96
10.11.1 PIPE PCIe ... 96
10.11.2 Raw SerDes ... 97
10.12 Disabling Unused Lane(s) in a multi-lane PCIe link ... 99
10.13 External reference clock active detection ... 99
10.14 Rx Data Debug Timing Diagrams ... 102
10.14.1 Operation ... 102
10.15 PHY state change monitor operation ... 102
11 PHY Power Control ... 104
11.1 PHY power control module ... 104
11.2 PHY power control FSM ... 106
11.2.1 Synchronization logic and FSM signals ... 106
11.3 Special logic ... 108
11.3.1 pma_cmn_refclk_disable ... 109
11.3.2 pma_cmn_refclk_active_ln[] ... 109
11.3.3 Rx Electrical Idle force ... 110
12 State Change Monitor Description ... 111
12.1 State Change Monitor overview ... 111
12.2 Pin List ... 111
12.3 FSM ... 113
13 PHY Electrical Specifications ... 114
13.1 Operating Conditions ... 114
13.2 Common Electrical Specifications ... 114
13.3 Power Specifications ... 114
14 Package Specifications ... 115
14.1 Package Selection and Design Notes ... 115
14.2 Differential Data Lines ... 115
14.3 Special Analog Signals ... 115
14.4 Supplies ... 115
15 PHY RTL Compile Options ... 116
15.1 PHY Types ... 116
15.2 RTL Defines ... 117
15.2.1 Pre-delivery ... 117
15.2.2 Post-delivery ... 117

List Of Tables

Table 1: Definitions 10
Table 2: Multi-protocol PHY power pin list 14
Table 3: Multi-protocol PHY external pin / bump list 14
Table 4: Multi-protocol PHY On-chip functional pin list 14
Table 5: PHY manufacturing test and diagnostics related pin list 27
Table 6: Digital Test Bus A 29
Table 7: Digital Test Bus B 29
Table 8: Supported PHY configurations 31
Table 9: PLL Mapping based on PHY Configuration 33
Table 10: CDB high level address space mapping 43
Table 11: Macro top level CDB register address map 44
Table 12: TAP Supported Custom Data Register Instructions 46
Table 13: PHY macro diagnostic control register 46
Table 14: PHY macro diagnostic APB access address register 46
Table 15: PHY macro diagnostic APB access write data register 47
Table 16: PHY macro diagnostic APB access read data register 47
Table 17: PHY macro diagnostic APB access control register 47
Table 18: PIPE common control1 register 49
Table 19: PIPE common control2 register 50
Table 20: PIPE comma lock configuration1 register 50
Table 21: PIPE comma lock configuration2 register 50
Table 22: PIPE EIEOS lock configuration register 51
Table 23: PIPE lane disable register 51
Table 24: PIPE receiver detect inhibit register 51
Table 25: PIPE RX electrical idle L1.x exit delay register 52
Table 26: PHY PLL configuration register 52
Table 27: PHY state change monitor timeout 52
Table 28: PHY speedup control register 53
Table 29: PHY External Reference Clock Detect Low Threshold register 53
Table 30: PHY External Reference Clock Detect High Threshold register 53
Table 31: PHY External Reference Clock Detect Measurement Interval register 53
Table 32: PHY External Reference Clock Detect Delay register 54
Table 33: PHY External Reference Clock Detect Isolation Control register 54
Table 34: PHY interrupt status register 55
Table 35: PHY USB3 Gen 2 pre-shoot configuration 0 register 56
Table 36: PHY USB3 Gen 2 pre-shoot configuration 1 register 56
Table 37: PHY USB3 Gen 2 de-emphasis configuration 0 register 56
Table 38: PHY USB3 Gen 2 de-emphasis configuration 1 register 57
Table 39: PMA common control1 register 57
Table 40: PMA common control2 register 57
Table 41: PMA SSM current state register 58
Table 42: PMA PLL Raw SerDes control register 58
Table 43: PMA PLL0 State Machine current state register 58
Table 44: PMA PLL1 State Machine current state reg 58
Table 45: PMA transceiver control register 59
Table 46: PMA loopback control register 59
Table 47: PMA PI position register 59
Table 48: PMA Transceiver PSM current state low register 59
Table 49: PMA Transceiver PSM current state high register 60
Table 50: PHY common control isolation register 60
Table 51: PIPE TX control signal isolation register 61
Table 52: PIPE Tx local preset coefficients low isolation register 61

Table 53: PIPE Tx local preset coefficients high isolation register 61
Table 54: PIPE TX Deemphasis low isolation register 62
Table 55: PIPE Tx Deemphasis high isolation register 62
Table 56: PIPE Tx local FS/LF isolation register 62
Table 57: PCS PIPE TX Data low isolation register 62
Table 58: PCS PIPE TX Data high isolation register 62
Table 59: PCS PIPE RX control signal isolation register 63
Table 60: PIPE Rx equalization evaluation isolation register 63
Table 61: PHY link configuration isolation register 64
Table 62: PCS PIPE Link control isolation register 64
Table 63: PIPE USB loopback slave BER count register 64
Table 64: PCS PIPE RX data low isolation register 65
Table 65: PCS PIPE RX data high isolation register 65
Table 66: Ethernet MAC clock configuration isolation register 65
Table 67: Ethernet MAC clock divider isolation register 65
Table 68: PMA common control signal isolation register 66
Table 69: PMA PLL control0 isolation register 66
Table 70: PMA PLL control1 isolation register 66
Table 71: PMA control isolation register 67
Table 72: PMA transceiver control isolation register 67
Table 73: PMA Tx local preset coefficient low isolation register 68
Table 74: PMA Tx local preset coefficient high isolation register 68
Table 75: PMA Tx de-emphasis low isolation register 68
Table 76: PMA Tx de-emphasis high isolation register 68
Table 77: PMA Tx FS/LF isolation register 69
Table 78: PMA Tx margin isolation register 69
Table 79: PMA Link Mode isolation register 69
Table 80: PMA Link Power State Control isolation register 69
Table 81: PMA Rx equalization control isolation register 70
Table 82: PMA low data isolation register 70
Table 83: PMA high data isolation register 70
Table 84: General timing specifications 73
Table 85: PHY state transition timing specifications 74
Table 86: PHY-level (PCS) Transmit and Receiver Latency 76
Table 87: State change monitor pin description 111
Table 88: PHY Configuration Define Settings for Various PHY Types 116

List Of Figures

Figure 1: Multi-protocol/multi-link PHY block diagram 13
Figure 2: APB and TAP clocking and reset 35
Figure 3: PHY/PCS reference and PSM clocking block diagram 36
Figure 4: PHY/PCS data rate clocking block diagram 37
Figure 5: Data rate clock path for a slave only lane 38
Figure 6: Data rate clock path for a master only lane 38
Figure 7: Full rate and MAC Clk diagram 39
Figure 8: PCS MAC clock generation 39
Figure 9: Reset synchronizer 40
Figure 10: tx_sfifo_align_bump signaling 41
Figure 11: tx_sfifo_enq_reset_n signaling 42
Figure 12: PIPE Start-up sequence 78
Figure 13: Raw SerDes Start-up sequence 79
Figure 14: PIPE mode power state change (without PIPE clock stop) 80
Figure 15: PIPE power state change (with PIPE clock stop) 80
Figure 16: PIPE power state change (with PIPE clock enable) 81
Figure 17: PCIe L1.1 entry sideband timing (without reference clock output) 82
Figure 18: L1.x entry sideband timing (with reference clock output) 83
Figure 19: PCIe L1.1 entry PIPE timing (without reference clock output) 84
Figure 20: L1.x entry PIPE timing (with reference clock output) 85
Figure 21: PCIe L1.x exit sideband timing (without reference clock output) 86
Figure 22: PCIe L1.x exit sideband timing (with reference clock output) 87
Figure 23: PCIe L1.x exit PIPE timing (without reference clock output) 88
Figure 24: PCIe L1.x exit PIPE timing (with reference clock output) 89
Figure 25: Raw SerDes interface link A0/A1/A2 power state change timing 89
Figure 26: Raw SerDes interface link A3/A4 power state change timing 90
Figure 27: PIPE data rate change timing 90
Figure 28: Raw SerDes interface data rate change 91
Figure 29: Raw SerDes interface mode of operation change 92
Figure 30: PIPE PCIe Gen1/2 and USB3.2 Gen 1 transmit data path 92
Figure 31: PIPE PCIe Gen3 and USB3.2 Gen 2 transmit data path 93
Figure 32: Raw SerDes transmit data path 93
Figure 33: PIPE PCIe and USB (P2) recevier detection timing 93
Figure 34: PIPE USB (P3) recevier detection timing 94
Figure 35: Raw SerDes recevier detection timing 94
Figure 36: PIPE mode Tx deemphasis change timing 94
Figure 37: Raw SerDes mode Tx deemphasis change timing 95
Figure 38: PIPE PCIe Gen1/2 and USB3.2 Gen 1 receive data path 95
Figure 39: PIPE PCIe Gen3 and USB3.2 Gen 2 receive data path 96
Figure 40: Raw SerDes receive data path 96
Figure 41: Receiver equalization evaluation (typical) 96
Figure 42: Receiver equalization evaluation (aborted) 97
Figure 43: Receiver equalization evaluation (aborted with race condition) 97
Figure 44: Get local transmit preset coefficients 97
Figure 45: Raw SerDes Rx equalization evaluation (not complete) 98
Figure 46: Raw SerDes Rx equalization evaluation (complete) 98
Figure 47: Raw SerDes Get Preset transmitter coefficient 99
Figure 48: Detected Automatic Operation Timing Diagram 100
Figure 49: Non-Detected Automatic Operation Timing Diagram 100
Figure 50: Detected Manual Operation Timing Diagram 101
Figure 51: Non-Detected Manual Operation Timing Diagram 101
Figure 52: Rx Data Debug interface 102

Figure 53: PHY Power/Rate Control block diagram 105
Figure 54: Multi-link PHY Power/Rate Control FSM 106
Figure 55: pipe_suspend_req_sync FSM input 106
Figure 56: raw_suspend_req_enter_sync and raw_suspend_req_exit_sync FSM inputs 107
Figure 57: lane_off_ref, link_off_ref and lane_on FSM inputs 107
Figure 58: PCIe single link FSM inputs 108
Figure 59: pma_cmn_refclk_disable output logic 109
Figure 60: pma_cmn_refclk_active[] output logic 109
Figure 61: State Change Monitor FSM diagram 113

About this Document

This book describes in detail the functional operations of Torrent 12FFC Multi-protocol PHY macro - an implementation of a PIPE compliant PCIe Gen 2 PHY, consisting of a PCIe PCS, multi-protocol PMA, and supporting components. It is intended for those involved in using the macro in a system-on-a-chip environment..

This book contains the following sections:

- *Section 1 PHY Overview* on page 11
- *Section 2 PHY Pin List* on page 14
- *Section 3 Configuration* on page 31
- *Section 4 PHY Clocking And Reset* on page 34
- *Section 5 PHY Internal CDB Access* on page 43
- *Section 6 PHY TAP Complex* on page 46
- *Section 7 PHY Register Descriptions* on page 49
- *Section 8 Testability* on page 71
- *Section 9 PHY Timing Specifications* on page 72
- *Section 10 PHY Operation* on page 78
- *Section 11 PHY Power Control* on page 104
- *Section 12 State Change Monitor Description* on page 111
- *Section 13 PHY Electrical Specifications* on page 114
- *Section 14 Package Specifications* on page 115
- *Section 15 PHY RTL Compile Options* on page 116

For additional information see the following documents.

- AMBA 3 APB bus protocol specification
- IEEE 1149.1 standard
- IEEE 1149.6 standard
- Torrent 16nm Multi-Protocol PMA Specification
- PHY Interface For The PCI Express Architecture (PIPE) 4.4
- Multi-protocol PCS Specification
- PCI Express Base revision 3.1 Specification
- Universal Serial Bus 3.1 Specification - Revision 1.0
- IEEE 802.3

The following are definitions for terms commonly used in this document.

Term	Definition
ATB	Analog test bus.
BIST	Built-in self test.
CDB	Configuration and diagnostics bus.
Gb/s	Gigabit per second.
Lane	The digital logic and analog components associated with one serial bit stream.
LSB	Least significant bit.
LTSSM	Link Training and Status State Machine
MAC	Media Access Controller
Macro	Macro refers to the entire Cadence PHY.
Mb/s	Megabit per second.
Module	Module refers to any sub-component of the overall macro.
MSB	Most significant bit.
PCS	Physical Coding Sub-layer - PCIe PCS in this design.
PHY	Cadence physical layer macro.
PIPE	Physical Interface for the PCE Express
POR	Power On Reset
PVT	Process Voltage Temperature
RX	Receiver.
TX	Transmitter.
UI	Unit Interval - The amount of time taken for one serial bit of data to be transmitted (measured from the leading edge of the data bit to the trailing edge of the data bit).

Table 1: Definitions

1 PHY Overview

The PHY macro is an implementation of a Multi-protocol, multi-link PHY, consisting of a PCIe Gen3/USB3.2 Gen2/SATA PCS, multi-protocol PMA, integrated PIPE/Raw SerDes interface MUX and supporting components. It consists of IP from Cadence Design Systems. The specifications for these sub-components are listed in “About this Document on page 9”. The PCS and PMA specifications are separate specification documents. In regards to the top level PHY specification, it is assumed that the reader of this document is familiar with these specifications.

Figure 1 on page 13 illustrates a top-level block diagram for the PHY macro, and it’s interfaces. The following are high level points worth noting in this figure.

- The PHY and PMA isolation and control modules serve two purposes.
  - They provide for two levels of isolation testing. These are PMA only and full PHY macro. When in isolation mode, PHY and PMA signals are under the control of CDB registers. The setting/reseting of isolation modes is considered static and this should not be done when in an active operating mode.
  - These modules also contain general control and status registers for the PCS and PMA.
- The Async APB Interface Slave module is part of a two module system that allows the internal CDB registers to be written and read by either the external APB interface or the integrated TAP interface. Both interfaces can access the internal CDB, with the TAP having higher priority.
- The PMA boundary scan function is capable of being controlled either by the internal Tap controller, or an external tap controller, under the control of the bscan_ext_select pin.

1.1 Features

- Supported standards:
  - PIPE interface mode -
    - PCIe Gen 1, 2 and 3.
    - USB3.2 Gen 1 (SuperSpeed) and Gen 2 (SuperSpeed+)
    - SATA Gen 1, 2 and 3.
  - Raw SerDes (or PMA direct connect) interface mode supporting:
    - SGMII
    - Ethernet 2.5/5 Gbps
    - SATA Gen 1, 2 and 3
    - DisplayPort Tx (RBR, HBR, HBR2 and HBR3) / embedded DisplayPort Tx (UI_Rate_1 - UI_Rate_8)
    - JESD204B (various rates from 1.25 Gbps to 10.3125 Gbps)
    - XFI (10.3125 Gbps)
    - USXGMII (5.15625 / 10.3125 Gbps)
- Supported lane configurations: all lane configurations from x1 to x8.
- Single protocol, independent multiple links (where N is the number of lanes) support for:
  - All PCIe link configurations from Nx1 to 1xN, where the unified lanes are adjacent to each other. For example, for a 4 lane PHY, the following link configurations are available: 4x1, 1x4, 2x2, 2x1+1x2.
  - N USB3.2 links.
  - 2 DP/eDP Tx links.
  - N SGMII (or 2.5/5 Gbps Ethernet) links.
  - 2 JESD204B links.
  - N XFI/USXGMII links.
- Simultaneous multi-protocol support for various combinations, including:

  - 1 PCIe link + (multiple USB links or multiple SATA links or multiple Ethernet links or 1 DP/eDP Tx link or 1 JESD204B link or multiple XFI/USXGMII links)
  - Multiple USB links + (multiple SATA links or multiple Ethernet links or 1 DP/eDP Tx link or 1 JESD204B links or multiple XFI/USXGMII links)
  - Multiple SATA links + (multiple Ethernet links or 1 DP/eDP Tx link or 1 JESD204B link or multiple XFI/USXGMII links)
  - Multiple Ethernet links + (1 DP/eDP Tx link or 1 JESD204B link or multiple XFI/USXGMII links)
  - 1 DP/eDP Tx link + (1 JESD204B link or multiple XFI/USXGMII links)
  - 1 JESD204B link + multiple XFI/USXGMII links
- PHY interface is compliant to PIPE revision 4.4.
  - Configuration option to support a source synchronous PIPE interface (simplifies SoC timing where PIPE controller and PHY are physical separate).
- Raw SerDes interface with separate Tx and Rx source synchronous clocks.
- PHY-level and PCS logic delivered as ‘soft’ RTL.
- PMA delivered as ‘hard’ macro.
- Supports 16-bit AMBA APB bus interface for programming parameters and diagnostics.
  - Supports option to automatically configure for PCIe single or multi-link operation with 100 MHz reference clock (no SSC).
- Supports PCIe “L1 PM Substates with CLKREQ” through either PIPE or a side-band interface.
- Selectable 16- or 32-bit PIPE interface data width.
- For automotive safety applications, supports logic to monitor for successful PHY power state / data rate changes and generate an interrupt upon failure..
- See PMA specification for PMA specific features.

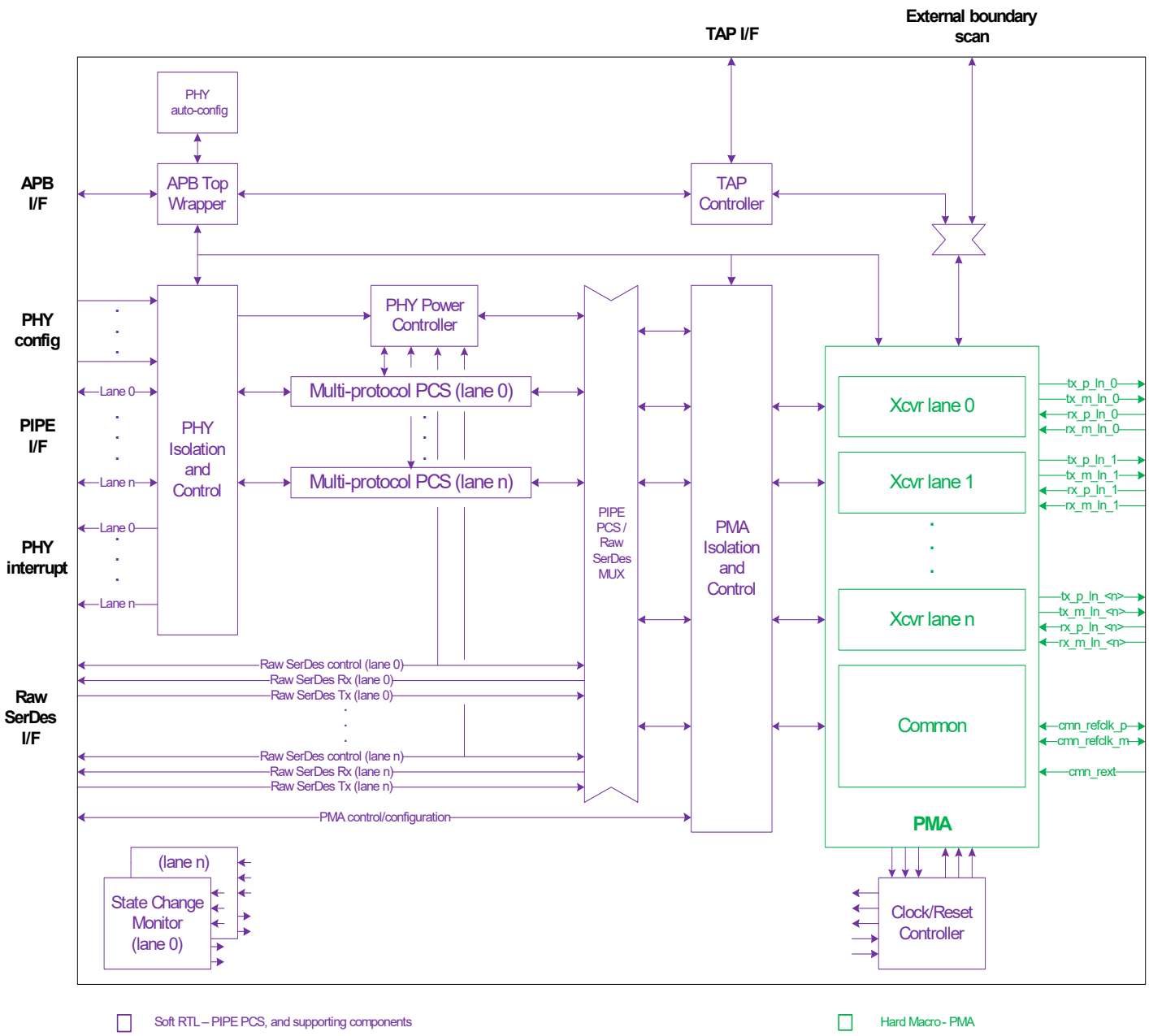

Figure 1: Multi-protocol/multi-link PHY block diagram

2 PHY Pin List

The following tables describe the pin list of the MP PHY. Note that several of these pins connect directly to the Torrent PMA. In these cases, this will be noted in the description that further description is provided in the PMA specification.

2.1 Power Pin List

Dir.	Signal Name	Type	External pin / bump or Internal core pin.	Description
input	gnd	power	bump	Macro ground.
input	cmn_avdd	power	bump	PMA common analog non high speed clock power
input	cmn_avdd_clk	power	bump	PMA common analog high speed clock power
input	cmn_avdd_h	power	bump	PMA common analog high voltage power
input	xcvr_avdd_ln_{n:0}	power	bump	PMA transmitter analog and non high speed clock power
input	xcvr_avdd_clk_ln_{n:0}	power	bump	PMA transceiver analog high speed clock power

Table 2: Multi-protocol PHY power pin list

2.2 External Pin / Bump List

Dir.	Signal Name	Type	Timing	Description
inout	cmn_refclk_p cmn_refclk_m	analog	n/a	PMA external reference clock differential input/output - configurable as reference clock input or as reference clock output. **Note: When configured as an output, a reference clock signal shall not be driven into these pins.**
output	tx_p_ln_{n:0} tx_m_ln_{n:0}	Diff	n/a	PMA transmitter serial data
input	rx_p_ln_{n:0} rx_m_ln_{n:0}	Diff	n/a	PMA receiver serial data
inout	cmn_rext	analog	n/a	PMA external calibration resistor

Table 3: Multi-protocol PHY external pin / bump list

2.3 On-Chip/SoC Functional Pin List

Notes:

* - Indicates a shared link signal. For multi-lane links (i.e. PCIe and DP/eDP Tx), only the master lane's pin is used for a shared link pin. For slave lanes, link output pins shall be ignored and link input pins can be tied high or low.

{nn:00} / {n:0} - Indicates a per-lane pin with nn / n indicating the highest lane number. For example for a 4 lane PHY, pipe_l{nn:00}_clk describes four pins: pipe_l00_clk, pipe_l01_clk, pipe_l02_clk and pipe_l03_clk.

Dir.	Signal Name	Type	Timing	Description
External APB interface				

Table 4: Multi-protocol PHY On-chip functional pin list

Dir.	Signal Name	Type	Timing	Description
input	apb_pclk	CMOS	n/a	APB bus clock.
input	apb_preset_n	CMOS	async	APB bus reset.
input	apb_penable	CMOS	apb_pclk	APB bus enable.
input	apb_psel	CMOS	apb_pclk	APB bus device select.
input	apb_pwrite	CMOS	apb_pclk	APB bus write.
input	apb_paddr[15:0]	CMOS	apb_pclk	APB bus address.
input	apb_pwdata[15:0]	CMOS	apb_pclk	APB bus write data.
output	apb_prdata[15:0]	CMOS	apb_pclk	APB bus read data.
output	apb_pready	CMOS	apb_pclk	APB bus ready.
PHY interface - These signals are shared by PIPE and Raw SerDes interfaces. (* - Indicates shared link signal. For multi-lane links, only the master lane is used for shared signals. Otherwise, the signal is per-lane.)				
input	phy_reset_n	CMOS	async	**PHY reset** : Asserting this signal low will reset all PHY logic for the entire PHY with the exception of the APB registers and TAP controller. Note: Upon de-assertion, all PHY inputs must be driven as described in the PIPE specification for a PIPE reset.
input	phy_link_cfg_ln_{n:1}	CMOS	static	**PHY link/lane configuration.** Used to map lanes to links. 0 - designates a lane as a link slave. 1 - designates a lane as a link master. Lanes are grouped into links from lowest lane number to highest. Adjacent slave lanes are part of multi-lane link down to the lowest numbered adjacent master lane. Lane 0 is always a master and thus does not require its own phy_link_cfg input. For example, for a 4 lane PHY can be configured as follows: {phy_link_cfg_ln_3, phy_link_cfg_ln_2, phy_link_cfg_ln_1} • 3'b111 = 4x1 configuration (i.e. 4 independent links) • 3'b000 = 1x4 configuration (i.e. single 4 lane link with lane 0 as the master lane) • 3'b010 = 2x2 configuration (i.e. 2 2-lane links with lane 0 and lane 2 as the master lanes) • 3'b011 = 2x1+1x2 configuration (i.e. 2 single lane links plus 1 2-lane link wiht lanes 0, 1 and 2 as the master lanes) • 3'b101 = 2x1+1x2 configuration (with lane 0, 1 and 3 as master lanes) • 3'b110 = 2x1+1x2 configuration (wiht lane 0, 2 and 3 as master lanes) • 3'b100 = 1x3+1x1 configuration (i.e. 1 3-lane link plus 1 single lane link with lane 0 and 3 as master lanes) • 3'b001 = 1x3+1x1 configuration (wiht lane 0 and 1 master lanes) Note: phy_reset_n and apb_preset_n must be asserted to modify this signal. The master lane of each link is that link's lane 0. It shall not be disabled unless all other lane's in the link are disabled. When each phy_link_cfg_ln_* = 0, the PHY is in a single-link configuration.
input	phy_l{nn:00}_reset_n *	CMOS	async	**PHY link reset** : Asserting this signal low will reset the PHY components (PCS and PMA) for the associated link, with the exception of the APB registers. For multi-lane links, only the master lane is valid. Disabled/ignored for slave lanes (per -link/shared signal). When in a single-link configuration, only phy_reset_n is required. phy_l00_reset_n can be tied high.

Table 4: Multi-protocol PHY On-chip functional pin list (Continued)

Dir.	Signal Name	Type	Timing	Description
input	phy_l{nn:00}_mode[1:0] *	CMOS	static	**PHY mode** : PHY mode of operation for the associated link. • 2'b00 = PCIe across PIPE I/F • 2'b01 = USB across PIPE I/F • 2'b10 = SATA across PIPE I/F • 2'b11 = Raw SerDes I/F mode These pins are only present when the PHY is configured to support both PIPE and RawSerDes I/Fs or PIPE only. For Raw SerDes only configuration, these pins are removed.
PIPE interface (* - Indicates shared link signal. For multi-lane links, only the master lane is used for shared signals. Otherwise, the signal is per-lane.) Note: If the PIPE interface is not required, a configuration option is available to remove the PIPE interface and underlying PHY PCS logic. When the PHY is configured for Raw SerDes operation, all PIPE I/F inputs are unused and can be driven low or high. The PIPE interface supports 2 configuration options: standard PIPE and source synchronous PIPE. For standard PIPE , all synchronous PIPE pins are aligned to pipe_l*_clk. For source synchronous PIPE, PIPE outputs remain aligned to pipe_l*_clk. But, all synchronous PIPE inputs are instead aligned to pipe_l*_clk_in, which is only present on the PIPE I/F in this configuration.				
input	phy_l{nn:00}_pcie_l1_ss_sel *	CMOS	static	**PIPE PCIe L1 substate enable**: When high, PCIe L1 SS is entered using protocol defined in PIPE 4.4 specification and described in the PHY operations chapter. PIPE-based L1 SS entry/exit uses the pipe_l*_powerdown and pipe_l*_phy_status pins instead of the phy_l*_ent_l1_x/ phy_l*_ack_l1_x pins. When low, the L1 substate side-band signaling protocol is used. The sideband protocol is described in the PHY operation chapter and uses the phy_l*_ent_l1_x/phy_l*_ack_l1_x pins. For both modes, the phy_l*_rx_elec_idle_det_en and phy_l*_tx_cmn_mode_en pins are used. However, the polarity of these pins is opposite depending on the mode. Note: These are 'strap' pins that are expected to be tied high or low depending on which L1 substate mode is supported by the PCIe controller(s) associated with the link. For multi-lane links, only the master lane is valid. Disabled/ ignored for slave lanes (per -link/shared signal).
output	pipe_l{nn:00}_clk *	CMOS	n/a	**PIPE clock**. For standard PIPE configuration, all synchronous PIPE signals are aligned to this clock. For source synchronous PIPE, all synchronous PIPE outputs are aligned to this clock. For multi-lane links, only the master lane is valid. Disabled/ignored for slave lanes (per -link/shared signal).
input	pipe_l{nn:00}_clk_in *	CMOS	n/a	**PIPE clock in**. This pin is not present for standard PIPE configuration. It is only present for source synchronous PIPE configuration. For source synchronous PIPE, all synchronous PIPE inputs are aligned to this clock. For multi-lane links, only the master lane is valid. Ignored for slave lanes (per -link/shared signal).
input	pipe_l{nn:00}_rate[1:0] *	CMOS	pipe_l*_clk / pipe_l*_clk_in	**PIPE link signaling rate**. Signals the PCIe link data rate. For multi-lane links , only the master lane is valid. Disabled/ ignored for slave lanes (per -link/shared signal). • 2'b00 : PCIe Gen 1 (2.5 Gbps) / USB3 Gen 1 (5 Gbps) / SATA Gen 1 (1.5 Gbps) • 2'b01 : PCIe Gen 2 (5 Gbps) / USB3 Gen 2 (10 Gbps) / SATA Gen 2 (3.0 Gbps) • 2'b10 : PCIe Gen 3 (8 Gbps) / USB3 Reserved / SATA Gen 3 (6 Gbps) • 3'b11 : Reserved

Table 4: Multi-protocol PHY On-chip functional pin list (Continued)

Dir.	Signal Name	Type	Timing	Description
input	pipe_l{nn:00}_powerdown[2:0] *	CMOS	pipe_l*_clk / pipe_l*_clk_in / async	**PIPE link power state**. Selects the PCIe link power state. For multi-lane links, only the master lane is valid. Disabled/ ignored for slave lanes (per -link/shared signal). • 3'b000 : PCIe P0 / USB3 P0 / SATA PhyRdy power state. • 3'b001 : PCIe P0s / USB3 P1 / SATA Partial power state. • 3'b010 : PCIe P1 / USB3 P2 / SATA Slumber power state. • 3'b011 : PCIe P2 / USB3 P3 / SATA DevSleep power state. • 3'b100 : PCIe P1.x (L1 sub-state) power state. Not valid for USB or SATA. Only valid when phy_pcie_l1_ss_sel is high. When phy_l*_pcie_l1_ss_sel is low, bit [2] should be tied low. • 3'b101 - 3'b111 : Reserved Timing is asynchronous in power states where pipe_l*_clk/ pipe_l*_clk_in is not running (i.e. PCIe P2/L1 SS, USB P3 or SATA DevSleep).
input	pipe_l{nn:00}_eb_mode *	CMOS	static	**PIPE elasticity buffer mode** : 0 = nominal half-full mode; 1 = nominal empty mode. Valid for USB Gen1 and SATA only. For PCIe and USB Gen 2 drive low. (PCIe and USB Gen 2 only supports nominal half-full operation.)
input	pipe_l{nn:00}_32bit_sel *	CMOS	static	**PIPE data width configuration** •0 - 16-bit pipe data width •1 - 32-bit pipe data width Note: Can only be changed when phy_reset_n is asserted low. For multi-lane links , only the master lane is valid. Disabled/ignored for slave lanes (per -link/shared signal).
output	pipe_l{nn:00}_phy_status	CMOS	pipe_l*_clk / async	**PIPE Phy Status** : Used to communicate the completion of several PHY functions (power state change, rate change and receiver detect). This communications completion protocol is described in detail in the PIPE specification. Timing is asynchronous in power states where the pipe_l*_clk is not running.
input	pipe_l{nn:00}_tx_data[31:0]	CMOS	pipe_l*_clk / pipe_l*_clk_in	**PIPE parallel transmit data**. In 16-bit interface mode only the 16 LSBs are used.
input	pipe_l{nn:00}_tx_data_k[3:0]	CMOS	pipe_l*_clk / pipe_l*_clk_in	**PIPE transmit data control** - Selects whether associated symbol is data (1'b0) or K-character (1'b1). In 16-bit interface mode only the 2 LSBs are used. Only used for PCIe Gen 1/2, USB3 Gen 1 and SATA. For PCIe Gen 3 and USB3 Gen 2 drive low.
input	pipe_l{nn:00}_tx_sync_header[3:0]	CMOS	pipe_l*_clk / pipe_l*_clk_in	**PIPE transmit data sync header** - 128 bit block header bits. Only used for PCIe Gen 3 and USB3 Gen 2 operation. Bits [3:2] are only used for USB Gen 2 operation, drive low for PCIe Gen 3. For PCIe Gen 1/2, USB3 Gen 1 and SATA drive low.
input	pipe_l{nn:00}_tx_start_block	CMOS	pipe_l*_clk / pipe_l*_clk_in	**PIPE transmit start block** - 1 = start word for a 128 bit block. Only used for PCIe Gen 3 and USB3 Gen 2 operation. For PCIe Gen 1/2, USB3 Gen 1 and SATA drive low.
input	pipe_l{nn:00}_tx_data_valid	CMOS	pipe_l*_clk / pipe_l*_clk_in	**PIPE transmit data valid :-** Indicates whether the data on pipe_l*_tx_data, pipe_l*_tx_data_k, pipe_l*_tx_start_block and pipe_l*_tx_sync_header is valid or not. When transmitting data, for PCIe Gen 3 and USB3 Gen 2, de-asserted for a single clock cycle every N data blocks (based on mode and data width). For PCIe Gen1/2, USB Gen 1 and SATA, never de-asserted while transmitting data.
input	pipe_l{nn:00}_tx_elec_idle	CMOS	pipe_l*_clk / pipe_l*_clk_in / async	**PIPE transmit electrical idle**: Used to place the TX lines into electrical idle state when in P0 power state. Timing is asynchronous in power states where pipe_l*_clk/ pipe_l*_clk_in is not running.

Table 4: Multi-protocol PHY On-chip functional pin list (Continued)

Dir.	Signal Name	Type	Timing	Description
input	pipe_l{nn:00}_tx_det_rx_lpbk *	CMOS	pipe_l*_clk / pipe_l*_clk_in	**PIPE TxDetectRx/Loopback**: Used to either start a receiver detection operation (in PCIe P1 and USB P2/P3 power states) or configures for loopback (in P0 power state). For non-USB multi-lane links, only the master lane is valid and is disabled/ ignored for slave lanes (per-link/shared signal). For USB multi-lane links, this is a per-lane signal.
input	pipe_l{nn:00}_tx_compliance	CMOS	pipe_l*_clk / pipe_l*_clk_in	**PIPE transmit compliance**: Sets the running disparity to negative for PCIe compliance patterns.
input	pipe_l{nn:00}_tx_ones_zeros	CMOS	pipe_l*_clk / pipe_l*_clk_in	**PIPE transmit Ones/Zeros**: 1 = transmit a repeating pattern of 80 1's followed by 80 0's. Used for USB3.2 Gen 1 compliance testing. For PCIe, USB3.2 Gen 2 and SATA drive low.
input	pipe_l{nn:00}_tx_pattern[1:0]	CMONS	pipe_l*_clk / pipe_l*_clk_in	**PIPE transmit pattern**: Selects the character to be transmitted for OOB. Used for SATA only. For PCIe and USB drive low. • 2'b00 = K28.5 (Align) • 2'b01 = D24.3 • 2'b10 = D10.2 • 2'b11 = Reserved
input	pipe_l{nn:00}_tx_128b_enc_byp	CMOS	pipe_l*_clk / pipe_l*_clk_in	**PIPE transmit 128-bit/13x-bit encoder bypass**: 1 = enables bypass fo 128b/132xb encoder. When asserted, the transmit sync header bits are not inserted into the transmit data stream and pipe_l*_tx_data_valid is no longer de-asserted every N blocks. 0 = normal 128b/13xb operation. Primary use is to support transmission of USB3.2 Gen 2 compliance patterns CP10, CP11 and CP12. For PCIe, USB3.2 Gen 1 and SATA operation, drive low.
input	pipe_l{nn:00}_tx_deemph[17:0]	CMOS	pipe_l*_clk / pipe_l*_clk_in	**PIPE transmitter de-emphasis level control**: For PCIe Gen 1/2 and USB3 Gen 1, only bits [1:0] are used: • 2'b00 = -6dB de-emphasis • 2'b01 = -3.5dB de-emphasis • 2'b10 = No de-emphasis • 2'b11 = Reserved For PCIe Gen 3: • [5:0] = C_{-1} • [11:6] = C_0 • [17:12] = C_{+1} For USB3 Gen 2, only bits [1:0] are used. Logic inside the PCS calculates the 18-bit de-emphasis value to the PMA (as defined above for PCIe Gen 3) based on the de-emphasis mode selected and the PMA's local FS value. For the default register configuration: • 2'b00 = CP13 (with pre-shoot, but no de-emphasis) • 2'b01 = normal mission mode and CP15 (with pre-shoot and de-emphasis) • 2'b10 = CP14 (with de-emphasis but no pre-shoot) • 2'b11 = CP16 (no pre-shoot or de-emphasis)
input	pipe_l{nn:00}_tx_get_local_preset_coef	CMOS	pipe_l*_clk / pipe_l*_clk_in	**PIPE transmitter get local preset coefficients**: For PCIe Gen 3 only when PHY is in P0 power state. For SATA, USB3 and PCIe Gen 1/2 (and when PHY is not in P0 power state) drive low. Asserted high for a single cycle to initiate a Get Local Preset Coefficient operation.
input	pipe_l{nn:00}_tx_local_preset_index[3:0]	CMOS	pipe_l*_clk / pipe_l*_clk_in	**PIPE transmitter local preset index**: For PCIe Gen 3 only. For SATA, PCIe Gen1/2 and USB3 drive low. Selects the preset index for the Get Coefficient operation. Must be valid upon assertion of pipe_l*_tx_get_local_preset_coef. Note: When in low swing mode (pipe_l*_swing == 1), only a subset of the index values are supported (as described in PMA specification).

Table 4: Multi-protocol PHY On-chip functional pin list (Continued)

Dir.	Signal Name	Type	Timing	Description
output	pipe_l{nn:00}_tx_local_tx_coef_valid	CMOS	pipe_l*_clk	**PIPE transmitter local coefficient valid**: Asserted high for a single clock cycle upon completion of the Get Local Preset Coefficient operation.
output	pipe_l{nn:00}_tx_local_tx_pre-set_coef[17:0]	CMOS	pipe_l*_clk	**PIPE transmitter local preset coefficient**: Tx deemphasis coefficient corresponding to the preset selected by pipe_l*_tx_local_preset_index. Valid upon assertion of pipe_l*_tx_local_tx_coef_valid.
output	pipe_l{nn:00}_tx_local_fs[5:0]	CMOS	pipe_l*_clk	**PIPE transmitter FS value**: Valid upon initial de-assertion of pipe_l*_phy_status.
output	pipe_l{nn:00}_tx_local_lf[5:0]	CMOS	pipe_l*_clk	**PIPE transmitter LF value**: Valid upon initial de-assertion of pipe_l*_phy_status.
input	pipe_l{nn:00}_tx_margin[2:0]	CMOS	static	**PIPE transmitter voltage margin control**: • 3'b000 - Maximum driver output swing • 3'b001 - 3'b110 - Incrementally decreasing driver output swing • 3'b111 - Reserved
input	pipe_l{nn:00}_tx_swing	CMSO	static	**PIPE transmitter voltage swing**: • 1'b0 - Full swing • 1'b1 - Low swing
output	pipe_l{nn:00}_rx_data[31:0]	CMOS	pipe_l*_clk	**PIPE parallel receive data** .In 16-bit interface mode only the 16 LSBs are valid.
output	pipe_l{nn:00}_rx_data_k[3:0]	CMOS	pipe_l*_clk	**PIPE receive data / K-character control**: Indicates whether the associated symbol is data (1'b0) or a K-character (1'b1). For 16-bit interface mode only the 2 LSBs are valid. Only valid for PCIe Gen 1/2, USB3 Gen 1 and SATA.
output	pipe_l{nn:00}_rx_sync_header[3:0]	CMOS	pipe_l*_clk	**PIPE receive data sync header**: 128 bit block header bits. Only valid for PCIe Gen 3 and USB Gen 2.
output	pipe_l{nn:00}_rx_start_block	CMOS	pipe_l*_clk	**PIPE receive start block**: 1 = start word for a 128 bit block. Only valid for PCIe Gen 3 and USB Gen 2.
output	pipe_l{nn:00}_rx_data_valid	CMOS	pipe_l*_clk	**PIPE recevie data valid**: 1 = data on pipe_l*_rx_data, pipe_l*_rx_data_k, pipe_l*_rx_sync_header and pipe_l*_rx-_start_block is valid.
output	pipe_l{nn:00}_rx_status[2:0]	CMOS	pipe_l*_clk	**PIPE receiver status**. • 3'b000 : Received data OK. • 3'b001 : 1 PCIe SKP symbol / USB SKPOS / SATA Align added. • 3'b010 : 1 PCIe SKP symbol / USB SKPOS / SATA Align removed. • 3'b011 : Receiver detected / SATA misalign detected. • 3'b100 : Both 8B10B and 128b/13xb decode error. • 3'b101 : Elastic buffer overflow. • 3'b110 : Elastic buffer underflow. • 3'b111 : Receiver disparity error.
output	pipe_l{nn:00}_rx_valid	CMOS	pipe_l*_clk	**PIPE Rx valid**: Used to indicate symbol lock to the Rx data stream.

Table 4: Multi-protocol PHY On-chip functional pin list (Continued)

Dir.	Signal Name	Type	Timing	Description
output	pipe_l{nn:00}_rx_elec_idle	CMOS	async	**PIPE Rx electrical idle** PCIe: Indicates receiver detection of electrical idle, when in the P0, P0s, P1 and upon entry into a L1 substate. Upon exit from a L1 substate, forced high for a configurable time while analog Rx signal detect logic is powered up. Time forced high depends on whether all links were powered down or not. USB: Indicates detection of LFPS signaling for all power states. Asserted low when receiving LFPS and high otherwise. SATA: Indicates receiver detection of electrical idle when in all power states. Used for detection of OOB signaling. Per the SATA specification, OOB signals are groupings of bursts of the ALIGNp primitive at the Gen 1 data rate combined with electrical idle gaps. Asserted high when receiving electrical idle and low otherwise (which includes when receiving ALIGNp primitive during OOB signaling).
output	pipe_l{nn:00}_align_detect	CMOS	pipe_l*_clk	**PIPE SATA align detect** : 1 = SATA align primitive received. Valid for SATA only.
input	pipe_l{nn:00}_rx_polarity	CMOS	pipe_l*_clk / pipe_l*_clk_in	**PIPE receive invert polarity** • 1'b0 : Polarity inversion disabled. • 1'b1 : Polarity inversion enabled. Receive data is inverted.
input	pipe_l{nn:00}_rx_termination	CMOS	async	**PIPE receiver termination**: 1= enable Rx termination for the lane; 0 = disable Rx termination for the lane. Used for USB only. For PCIe drive low. (For PCIe, Rx termination is enabled when the lane is enabled.)
input	pipe_l{nn:00}_rx_eq_training	CMOS	pipe_l*_clk / pipe_l*_clk_in	**PIPE receiver equalization training enable**: 1 = enable Rx equalization training; 0 = normal operation. Used for USB only. For PCIe and USB drive low.
input	pipe_l{nn:00}_rx_eq_eval	CMOS	pipe_l*_clk / pipe_l*_clk_in	**PIPE receiver equalization evaluation start**: 1 = perform far end transmitter equalization evaluation and report result on pipe_l*_rx_link_eval_fb_dir_change. Used for PCIe Gen 3 only. For USB, PCIe Gen1/2 and SATA drive low.
output	pipe_l{nn:00}_rx_link_eval_f-b_dir_change[5:0]	CMOS	pipe_l*_clk	**PIPE receiver link equalization feedback direction change**: Far-end transmitter equalization evaluation result. Valid upon assertion of pipe_l*_phy_status. Used for PCIe Gen 3 only.
input	phy_l{nn:00}_rx_elec_idle_det_en *	CMOS	async	**PHY Rx Electrical Idle detect enable / Rx Electrical Idle detect disable** : Controls the PHY signal detection circuitry during L1 substate entry. The polarity of this pin depends on the L1 SS mode selected: • phy_l*_pcie_l1_ss_sel == 0 : After assertion of phy_l*_ack_l1_x, de-assert low to complete entry into L1.1/L1.2. Assert high for all other power states. • phy_l*_pcie_l1_ss_sel == 1 : After de-assertion of pipe_l*_phy_status, drive high to complete entry into L1.1/L1.2. De-assert low for all other power states. For multi-lane links, only the master lane is valid. Disabled/ignored for slave lanes (per-link/shared signal). For USB3 or SATA lanes, tie high if phy_l*_pcie_l1_ss_sel is low and tie low if phy_l*_pcie_l1_ss_sel is high.

Table 4: Multi-protocol PHY On-chip functional pin list (Continued)

Dir.	Signal Name	Type	Timing	Description
input	phy_l{nn:00}_tx_cmn_mode_en *	CMOS	async	**PHY Tx common mode enable / Tx common mode disable**: Controls the PHY common mode circuitry during L1.2 entry. The polarity of this pin depends on the L1 SS mode selected: • phy_l*_pcie_l1_ss_sel == 0 : After assertion of phy_l*_ack_l1_x, de-assert low to complete entry into L1.2 (for L1.1 leave asserted high). Assert high for all other power states. • phy_l*_pcie_l1_ss_sel == 1 : After de-assertion of pipe_l*_phy_status, drive high to complete entry into L1.2 (for L1.1 leave low). De-assert low for all other power states. For multi-lane links, only the master lane is valid. Disabled/ignored for slave lanes (per-link/shared signal). For USB3 or SATA lanes, tie high if phy_l*_pcie_l1_ss_sel is low and tie low if phy_l*_pcie_l1_ss_sel is high.
input	phy_l{nn:00}_ent_l1_x *	CMOS	async	**PHY enter L1 substate (sideband)** : Asserted high to direct associated PHY link to enter a L1 substate. Once asserted or de-asserted, this signal shall not change state again until after the corresponding transaction on phy_ack_l1_x. Can only be asserted high when the link is in the P1 power state. For multi-lane links, only the master lane is valid. Disabled/ignored for slave lanes (per-link/shared signal). Only valid when phy_pcie_l1_ss_sel is low. When phy_l*_pcie_l1_ss_sel is high, tie low.
output	phy_l{nn:00}_ack_l1_x *	CMOS	async	**PHY acknowledge L1 substate (sideband)** : Acknowledgment from PHY that the requested L1_x entry or exit operation has been complete. Asserted high to indicate entry into L1 substate is complete. De-asserted low to indicate exit from L1 substate (back to P1 power state) is complete. For multi-lane links, only the master lane is valid. Disabled/ignored for slave lanes (per-link/shared signal). Only valid when phy_pcie_l1_ss_sel is low. When phy_l*_pcie_l1_ss_sel is high, leave unconnected
input	phy_en_refclk	CMOS	async	**PHY reference clock enable**: When cmn_refclk_<p/m> is configured as a reference clock output, 1 = glitch-less enable of the reference clock output. 0 = glitch-less turn off reference clock output. Used in L1.x entry/exit protocol. Note: When outputting a derived reference clock from the PLL, it is recommended to drive phy_en_refclk low until the PHY has completed start-up and de-asserted pipe_l*_reset_n for PIPE operation or asserted cmn_ready for Raw SerDes operation.. The clock will not be 'good' until the PHY has completed initial start-up.
output	phy_refclk_reqd	CMOS	async	**PHY reference clock input required**: 1 = input reference clock required. 0 = input reference clock may be turned off. Only valid when a valid reference clock is being provided to the PHY (i.e. upon L1.x exit, not valid until input reference clock re-started). Used in L1.x entry/exit protocol when reference clock being output on cmn_refclk_<p/m>.

Table 4: Multi-protocol PHY On-chip functional pin list (Continued)

Dir.	Signal Name	Type	Timing	Description
input	phy_pma_suspend_override	CMOS	async	**PHY PMA common suspend override enable**: 1 = disables suspending the PMA common when all links are in low power state (L1 SS, PCIe P2, USB P3, powerdown disabled, etc.). 0 = PMA common will be suspended when all links are in low power state. Driving this pin high has no effect if the PMA common is already suspended or is in the process of being suspended (i.e. it will not force the PMA common to resume). It only prevents the start of suspending the PMA common. However, if this pin is de-asserted when all links are in low power state, the PMA common will then be suspended.
Raw SerDes interface - This interface is used to support direct connection to the PMA, which enables support for Ethernet (i.e. SGMII, 2.5 Gbps and 5 Gbps), DP/eDP Tx and generic SerDes modes (i.e. JESD204B). This interface is used when the link is configured for Raw SerDes through phy_l*_mode pins or when the PHY is configured as Raw SerDes only. See the PMA specification for additional description of these pins • # indicates pins that are removed for an Reduced Raw SerDes configuration. • When the PHY is configured for PIPE operation, all Raw SerDes I/F inputs are unused and can be driven low or high and outputs shall be ignored. • RTL configurations are available to remove some or all of these pins.				
output	pma_cmn_ready	CMOS	async	**PMA common ready** : 1 = PMA common is ready for operation. Used as part of Raw SerDes startup sequence and power state changes.
input	pma_xcvr_pllclk_en_ln_{n:0} *	CMOS	async	**Link PLL clock enable** : Used to cleanly turn off the data rate clock in the PMA for all lanes in the associated link.
output	pma_xcvr_pllclk_en_ack_ln_{n:0} *	CMOS	async	**Link PLL clock enable acknowlegent** : Indicates whether the data rate clock in the PMA for the associated link is running or not.
input	pma_xcvr_power_state_req_ln_{n:0}[5:0] *	CMS	async	**Link power state request** : Used to change the link's power state. When the link has completed the transition to the requested power state, the requested state will be reflected on pma_xcvr_power_state_ack_ln_*. • 6'b000000 : Idle • 6'b000001 : A0 - Tx/Rx active • 6'b000010 : A1 - Powerdown 1 (equivalent to PCIe P0s / USB P1) • 6'b000100 : A2 - Powerdown 2 (equivalent to PCIe P1 / USB P2) • 6'b001000 : A3 - Powerdown 3 (equivalent to PCIe P2 / USB P3) • 6'b010000 : Reserved • 6'b100000 : Reserved This is a one hot encoded signal. A change in the requested state shall not occur until after the current request has been acknowledged and pma_xcvr_power_state_req_ln_* has been returned to 0. Upon reset release, either A0 or A2 must be requested.
output	pma_xcvr_power_state_ack_ln_{n:0}[5:0] *	CMS	async	**Link power state acknowledgement** : This signal provides indication that a power state change request has completed. • 6'b000000 : Idle • 6'b000001 : A0 • 6'b000010 : A1 • 6'b000100 : A2 • 6'b001000 : A3 • 6'b010000 : Reserved • 6'b000000 : Idle This is a one hot encoded signal. Once a power state is acknowledged, the value will remain unchanged until a new power state is requested and the link has completed the transition to the new power state.

Table 4: Multi-protocol PHY On-chip functional pin list (Continued)

Dir.	Signal Name	Type	Timing	Description
input	pma_xcvr_standard_-mode_ln_{n:0}[1:0] *	CMOS	static	**Link mode of operation** : Selects the mode of operation 9i.e. data rate) for each lane in the link. This value can only be changed per the Raw SerDes mode of operation change or data rate change procedures. See PMA specification and Programmer's Guide for details.
input	pma_xcvr_data_width_ln_{n:0}[2:0] *	CMOS	static	**Link parallel data width** : Selects the width of the parallel Tx and Rx data buses for this link. The data width required depends on the mode of operation. This value can only be changed per the Raw SerDes mode of operation change or data rate change procedures. • 3'b101 : 20-bit • 3'b001 : 16-bit • All other encodings : Reserved
input	pma_tx_td_ln_{n:0}[19:0]	CMOS	pma_tx_td_-clk_ln_{n:0}	**PMA Tx data** : Transmit data for the associated lane. The valid bits are based on pma_xcvr_data_width_ln_* (either bits [19:0] or [15:0]). Unused bits are driven low.
input	pma_tx_td_clk_ln_{n:0}	CMOS	n/a	**PMA Tx data clock** : Transmit data clock for the associated lane. Transmit data (pma_tx_td_ln_*) is synchronous to this clock. Shall be driven from the lane's pma_pllclk_datart_ln_* PHY clock output.
input	pma_tx_elec_idle_ln_{n:0}	CMOS	pma_tx_td_-clk_ln_{n:0}	**PMA Tx electrical idle** : 1 = Tx differential output placed into electrical idle for the associated lane. 0 = transmit data.
output	pma_rx_rd_ln_{n:0}[19:0]	CMOS	pma_rx_rd_-clk_ln_{n:0}	**PMA Rx data** : Receive data for the associated lane. The valid bits are based on pma_xcvr_data_width_ln_* (either bits [19:0] or [15:0]).
output	pma_rx_rd_clk_ln_{n:0}	CMOS	n/a	**PMA Rx data clock** ; Receive data clock for the associated lane. Receive data (pma_rx_rd_ln_*) is synchronous to this clock.
output	pma_rx_rd_clk2x_ln_{n:0}	CMOS	n/a	**PMA 2x Rd data clock** : 2x clock frequency of pma_rx_rd_-clk_ln_* when lane is configured for 20-bit data width. Clock is frequency aligned, but not edge aligned. Clock is gated by default. Must be enabled through APB register write. (Max clock frequency = 625 MHz.)
output	pma_rx_signal_detect_ln_{n:0}	CMOS	async	**PMA receiver signal detect** : Asserted high upon detection of high speed signal on Rx differential inputs.
input	pma_tx_rcv_detect_en_ln_{n:0} (#)	CMOS	async	**PMA transmitter receiver detect enable** - Drives PMA input tx_rcv_detect_en_ln_* for the associated lane. Drive low upon de-assertion of phy_reset_n.
output	pma_tx_rcv_detect_done_ln_{n:0} (#)	CMOS	async	**PMA transmitter receiver detect done** - Driven from PMA output tx_rcv_detect_done_ln_* for the associated lane.
output	pma_tx_rcv_detected_ln_{n:0} (#)	CMOS	async	**PMA transmitter receiver detected** - Driven from PMA output tx_rcv_detect_done_ln_* for the assoicated lane.
input	pma_tx_deemphasis_ln_{n:0}[17:0] (#)	CMOS	async	**PMA transmitter deemphasis level control** - Drives PMA input tx_deemphasis_ln_* for the associated lane. Drives with desired initial deemphasis setting upon de-assertion of phy_reset_n.
input	pma_tx_get_local_preset_co-ef_ln_{n:0} (#)	CMOS	async	**PMA transmitter get local preset coefficient** - Drives PMA input tx_get_local_preset_coef_ln_* for the associated lane. Drive low upon de-asertion of phy_reset_n.
input	pma_tx_local_preset_index-_ln_{n:0}[3:0] (#)	CMOS	async	**PMA transmitter local preset index** - Drives PMA input tx_local_preset_index_ln_* for the associated lane. Drive low upon de-assertion of phy_reset_n.
output	pma_tx_local_tx_coef_valid_ln_{n:0} (#)	CMOS	async	**PMA transmitter local coefficient valid** - Driven from PMA output tx_local_tx_coef_valid_ln_* for the associated lane.
output	pma_tx_local_tx_preset_co-ef_ln_{n:0}[17:0] (#)	CMOS	async	**PMA transmitter local preset/init coefficients** - Driven from PMA output tx_local_tx_preset_coef_ln_* for the associated lane.
input	pma_tx_vmargin_ln_{n:0}[2:0] (#)	CMOS	async	**PMA transmitter voltage margin control** - Drives PMA input tx_vmargin_ln_* for the associated lane. Drive with desired initial transit margin upon de-assertion of phy_reset_n.

Table 4: Multi-protocol PHY On-chip functional pin list (Continued)

Dir.	Signal Name	Type	Timing	Description
input	pma_tx_low_power_swing_en_ln_{n:0} (#)	CMOS	async	**PMA transmitter low power voltage swing enable** - Drives PMA input tx_low_power_swign_en_ln_* for the associated lane. Drive with desired initial transmit swing upon de-assertion of phy_reset_n
input	pma_rx_termination_ln_{n:0} (#)	CMOS	async	**PMA receiver termination enable** - Drives PMA input rx_termination_ln_* for the associated lane. Drive with desired initial Rx termination setting upon de-assertion of phy_reset_n.
input	pma_rx_eq_training_data_valid_ln_{n:0} (#)	CMOS	async	**PMA receiver equalization training data valid** - Drvies PMA input rx_eq_training_data_valid_ln_* for the associated lane. Drive high upon de-assertion of phy_reset_n.
input	pma_rx_eq_training_ln_{n:0} (#)	CMOS	async	**PMA receiver equalization training enable** - Drives PMA input rx_eq_training_ln_* for the associated lane. Drive low upon de-assertion of phy_reset_n.
input	pma_rx_eq_eval_ln_{n:0} (#)	CMOS	async	**PMA receiver equalization enable** - Drives PMA input rx_eq_eval_ln_* for the associated lane. Drive low upon de-assertion of phy_reset_n.
output	pma_rx_eq_eval_status_ln_{n:0} (#)	CMOS	async	**PMA receiver equalization status** - Driven from PMA output rx_eq_eval_status_ln_* for the associated lane.
output	pma_rx_eq_eval_complete_ln_{n:0} (#)	CMOS	async	**PMA receiver equalization complete** - Driven from PMA output rx_eq_eval_complete_ln_* for the associated lane.
output	pma_rx_link_eval_fb_dir_change_ln_{n:0}[5:0] (#)	CMOS	async	**PMA receiver equalization feedback direction change** - Driven from rx_link_fb_dir_change_ln_* for the associated lane. These pins provide increment / decrement indication for how to adjust the far end transmitter's de-emphasis setting (pre-emphasis, main and post-emphasis). Increment / decrement is wrt to the magnitude of the value. As pre- and post-emphasis are negative values, an increment would make the value more negative and a decrement would make the value less negative.
input	mac_src_sel_ln_{n:0}[1:0]	CMOS	static	**MAC clock source select** : Selects which PMA clock to use as clock couse for pcs_mac_clk*_ln_*. • 2'b00 - PMA output xcvr_pll_clk_datart_ln_* for the associated lane. • 2'b01 - PMA output xcvr_pll_clk_fullrt_ln_* for the assocaited lane. • 2'b10 - PMA output cmn_ref_clk_rcv. • 2'b11 - Reserved
input	mac_div_sel0_ln_{n:0}[6:0]	CMOS	static	**MAC clock divider ratio select** : Selects the divider ratio for pcs_mac_clk_divx0_ln_*. • 7'd0 : Reserved • 7'd1 : Divide by 1 • 7'd2 : Divide by 2 • 7'd3 : Divide by 3 ... • 7'dn : Divide by n n = 127 (maximum)
input	mac_div_sel1_ln_{n:0}[8:0]	CMOS	static	**MAC clock divider ratio select** : Selects the divider ratio for pcs_mac_clk_divx1_ln_*. • 9'd0 : Reserved • 9'd1 : Divide by 1 • 9'd2 : Divide by 2 • 9'd3 : Divide by 3 ... • 9'dn : Divide by n n = 511 (maximum)
output	pcs_mac_clk_ln_{n:0}	CMOS	n/a	**PCS MAC clock** : Selected MAC clock (mac_src_sel_ln_*)
output	pcs_mac_clk_divx0_ln_{n:0}	CMOS	n/a	**Divide by X PCS MAC clock** : Selected MAC clock divided by configured divide ratio (mac_div_sel0_ln_*).
output	pcs_mac_clk_divx1_ln_{n:0}	CMOS	n/a	**Divide by X PCS MAC clock** : Selected MAC clock divided by configured divide ratio (mac_div_sel1_ln_*).

Table 4: Multi-protocol PHY On-chip functional pin list (Continued)

Dir.	Signal Name	Type	Timing	Description
External Reference Clock Active Detected				
input	pma_cmn_ext_refclk_detected_cfg	CMOS	static	**External reference clock active detection configuration:** • 1 = Perform an external reference clock active detection operation upon de-assertion of apb_preset_n • 0 = Do not perform detection operation upon de-assertion of apb_preset_n
output	pma_cmn_ext_refclk_detected	CMOS	async	**External reference clock active detection result**: • 1 = External reference clock detected • 0 = Not detected
output	pma_cmn_ext_refclk_detected_valid	CMOS	async	**External reference clock active detection result valid:** • 1 = pma_cmn_ext_refclk_detected value is valid (i.e. detection operation has completed) • 0 = Not valid.
PHY Interrupt - A PHY configuration option is available to include or exclude the PHY Interrupt pins. These pins are equired for PHYs used in applications requiring automotive safety.				
output	phy_interrupt_ln_{n:0}	CMOS	async	**PHY interrupt output (per lane)**: Asserted high when a power state or data rate change does not complete within a timeout. Cleared upon reading the associated lane's interrupt status register. Only valid for the master lane of the link. Slave lanes should be ignored.
PHY/PMA interface and PMA clocks - See PMA specification for further description of these pins.				
input	pma_cmn_refclk_int	CMOS	n/a	**PMA common internally generated reference clock input -** Single-ended internal (i.e. SoC-side) reference clock input.
input	pma_cmn_refclk_dig_sel	CMOS	constant	**PMA common reference clock select -** Selects the reference clock source for the digital logic between cmn_refclk_<p/m> and pma_cmn_refclk_int. Must be set before the de-assertion of apb_preset_n/phy_reset_n. • 0 - cmn_refclk_<p/m> • 1 - pma_cmn_refclk_int
input	pma_cmn_refclk_mode[1:0]	CMOS	constant	**PMA common differential reference clock mode -** Sets the mode of operation for differential reference clock input. Must be set before the de-assertion of apb_preset_n/phy_reset_n. • 2'b00: Differential reference clock. • 2'b01: Single ended DC coupled test clock reference clock. • 2'b10: Reserved. • 2'b11: Reserved
input	pma_cmn_refclk_int_mode[1:0]	CMOS	constant	**PMA common internal reference clock mode** - Sets the mode of operation for internal reference clock input. Must be set before the de-assertion of apb_preset_n/phy_reset_n. • 2'b00 - Reserved • 2'b01 - 100 MHz and greater reference clock • 2'b10 - Reserved • 2'b11 - Less than 100 MHz reference clock
input	pma_cmn_refclk_dig_div[1:0]	CMOS	constant	**PMA common reference clock digital divide ratio select -** Must be set before the de-assertion of apb_preset_n/phy_reset_n. • 2'b00 - Divide by 1 (set for reference clock in the 19.2 to 27 MHz range) • 2'b01 - Divide by 2 (Reserved) • 2'b10 - Divide by 4 (set for 100 MHz reference clock) • 2'b11 - Divide by 8 (Reserved)
input	pma_cmn_refclk_term_en	CMOS	constant	**PMA common differential reference clock termination enable** - enables/disables termination for difference reference clock input (cmn_refclk_<p/m>). Must be set before the de-assertion of apb_preset_n/phy_reset_n. • 0 = termination disabled • 1 = termination enabled

Table 4: Multi-protocol PHY On-chip functional pin list (Continued)

Dir.	Signal Name	Type	Timing	Description
input	pma_cmn_pll0_refclk_sel pma_cmn_pll1_refclk_sel	CMOS	constant	**PMA PLL reference clock select** - selects which reference clock input to be used by the associated PLL. 0 = cmn_refclk_<p/m>, 1 = pma_cmn_refclk_int.
output	pma_refclk	CMOS	n/a	**PMA common reference clock output** - Driven from cmn_ref_clk PMA clock output. Provided for diagnostic purposes.
output	pma_refclk_gated	CMOS	n/a	**PMA common reference clock gated output** - Driven from cmn_ref_clk_gated PMA clock output. Provided for diagnostic purposes.
output	pma_refclk_rcv_out	CMOS	n/a	**PMA common reference clock receiver output** - Clock output from the analog reference clock receiver circuits. Frequency is always the same as the selected reference clock input. Once enabled, this clock is free-running and is active in all power states (provided the input reference clock is running). Note - This clock is enabled by setting the PMA cmn_refclk_rcv_out_en bit ([6]) in the on page 57.
output	pma_refclk_der / pma_refclk_der_n	CMOS	n/a	**PMA derived differential reference clock output** - Only available with a reference clock input frequencyin the 19.2 to 27.0 MHz range. When enabled, a 100 MHz spread-spectrum clock is output on this pin. Default is disabled. These outputs can be used to drive a common reference clock to another IC(s).
output	pma_pllclk_datart_ln_{n:0}	CMOS	n/a	PMA PLL data rate clock output - Divided down version of the high speed PLL clock going to receiver and transmitter lanes. Frequency is based on the PMA configuration and data rate.
output	pma_pllclk_fullrt_ln_{n:0}	CMOS	n/a	**PMA PLL full rate clock output** - Divided down version of the high speed PLL clock going to the receiver and transmitter lanes. Frequency is based on the PMA configuration and data rate. Additional clock division through pma_fullrt_div.
input	pma_fullrt_div_ln_{n:0}[1:0]	CMOS	static	**PMA PLL full rate clock divider select** - divide ratio for pma_pllclk_fullrt_ln_*. • 00 = Divide by 1 • 01 = Divide by 2 • 10 = Divide by 4 • 11 = Divide by 8
input	pma_cmn_clock_stop_req	CMOS	n/a	**Clock Stop Request**: Asserting high causes all clocks in the PMA macro to stop, such that the value of all of the digital F/Fs in the PMA can be scanned out.
output	pma_cmn_clock_stop_ack	CMOS	n/a	**Clock Stop Acknowledgement** - Asserted high once all clocks in the PMA macro have stopped in response to assertion of pma_cmn_clock_stop_req. Note: This signal is only valid when pma_cmn_clock_stop_req is asserted high. At times such as power on reset, this signal may be high. Additionally, if the PMA is suspended (i.e. all links in L1.x), the internal PMA reference clock is disabled. Thus, upon assertion of pma_cmn_clock_stop_req, pma_cmn_clock_stop_ack will not be asserted high, until the PMA re-enables its internal reference clock upon exit from suspend.

Table 4: Multi-protocol PHY On-chip functional pin list (Continued)

2.4 Manufacturing Test And Diagnostics Related Pins

Dir.	Signal Name	Type	Timing	Description
input	iddq_en	CMOS	async	IDDQ mode enable : When asserted high, the PMA is placed into IDDQ mode with all analog logic powered down.
TAP interface				
input	tap_tck	CMOS	n/a	
input	tap_tms	CMOS	tap_tck	
input	tap_trst_n	CMOS	tap_tck	
input	tap_tdi	CMOS	tap_tck	
output	tap_tdo	CMOS	tap_tck	
output	tap_tdoen	CMOS	tap_tck	
Rx Data Debug (optional interface)				
input	dbg_rx_rd_lane_sel[2:0]	CMOS	static	Receiver data debug lane select
output	dbg_rx_rd_clk	CMOS	n/a	Receiver parallel data clock
output	dbg_rx_rd[19:0]	CMOS	dbg_rx_rd_clk	Receiver parallel data out
output	dbg_rx_bist_sync	CMOS	dbg_rx_rd_clk	Rx BIST sync - asserted high upon BIST logic has synchronize with ithe ncoming Rx data (loopback or from serial pins) and is checking for errors. (See PMA specification for further description of this signal.)
output	dbg_rx_bist_status	CMOS	dbg_rx_rd_clk	Rx BIST status - asserted high upon BIST logic detecting an error in the Rx data. (See PMA specification for further description of this signal.)
output	dbg_rx_bist_err_toggle	CMOS	dbg_rx_rd_clk	RX BIST error toggle - toggled upon BIST logic detecting an error in the Rx data. (See PMA specification for further description of this signal.)
Digital Test Bus (optional interface - see section 2.6 “Digital Test Bus” on page 29 for more detailed description)				
input	dtb_mux_sel[4:0]	CMOS	async	Digital test bus MUX select.
output	dtb_data[31:0]	CMOS	async	Digital test bus data out
SoC Analog Test Bus				
inout	pma_atb_core_0 pma_atb_core_1	CMOS	n/a	Core-side ATB signals - When enabled, the same signals driven on the top-level ATB bumps are driven on this signal.
Digital scan interface				
input	scanmode	CMOS	n/a	Scan mode signal for PHY.
input	scanen	CMOS	n/a	Scan enable signal for PHY.
input	scanclk_refclk	CMOS	n/a	Scan test clock for reference clock rate.
input	scanclk_psmclk	CMOS	n/a	Scan test clock for PSM clock rate.
input	scanclk_pipeclk_ln_{n:0}	CMOS	n/a	Scan test clock for pipe_clk for each lane.
input	cmn_scanclk_serclk	CMOS	n/a	Scan test clock for serializer and deserializer rate in common.
input	cmn_scanclk_pllclk	CMOS	n/a	Scan test clock for PLL rate in common.
input	xcvr_scanclk_serclk_ln_{n:0}	CMOS	n/a	Scan test clock for serializer/deserializer rate for each lane.
input	xcvr_scanclk_pllclk_ln_{n:0}	CMOS	n/a	Scan test clock for PLL rate for each lane.
input	scanclk_macclk_ln_{n:0}	CMOS	n/a	Scan test clock for pcs_mac_clk_ln_,, pcs_mac_clk_divx-0_ln_<> and pcs_mac_clk_divx1_ln_<>. Only present when PHY configuration supports Raw SerDes I/F.
input	scanen_cg	CMOS	n/a	Clock gate test bypass enable signal - overrides all clock gating logic in PHY, including the PMA.
input	phy_scanin[15:0]	CMOS	Scan clocks	Scan test input pins for all the PHY (non-PMA) components. The number of chains is dependant on the defined setting and is customer dependant. (16 chains is default)
output	phy_scanout[15:0]	CMOS	Scan clocks	Scan test output pins for all the PHY (non-PMA) components. The number of chains is dependant on the defined setting and is customer dependant. (16 chains is default)

Table 5: PHY manufacturing test and diagnostics related pin list

Dir.	Signal Name	Type	Timing	Description
input	pma_cmn_scanin[39:0]	CMOS	Scan clocks	Scan test input pins for all the Torrent PMA common.
output	pma_cmn_scanout[39:0]	CMOS	Scan clocks	Scan test output pins for all the Torrent PMA common.
input	pma_xcvr_scanin_ln_{n:0}[63:0]	CMOS	Scan clocks	Scan test input pins for the Torrent PMA lane.
output	pma_xcvr_scanout_ln_{n:0}[63:0]	CMOS	Scan clocks	Scan test output pins for all the Torrent PMA lane.
External boundary scan control interface (see PMA spec for further description)				
input	bscan_ext_select	CMOS	const	PMA external boundary scan select (1 = external boundary scan interface is selected, 0 = internal TAP controller selected)
input	tx_bscan_ext_shiftdr	CMOS	tx_bscan_ext_clockdr	PMA TX boundary scan enable
input	tx_bscan_ext_clockdr	CMOS	async	PMA TX boundary scan data sample clock
input	tx_bscan_ext_updatedr	CMOS	async	PMA Tx boundary scan data update clock
input	tx_bscan_ext_mode_c	CMOS	async	PMA Tx boundary scan mode control
input	tx_bscan_ext_ac	CMOS	async	PMA Tx boundary scan AC test mode select
input	tx_bscan_ext_acpulse	CMOS	async	PMA Tx boundary scan AC test pulse
output	tx_bscan_ext_tdo	CMOS	async	PMA Tx boundary scan test out - connected to tx_b-scan_tdo output for highest lane number in PMA macro. For each lane, the rx_bscan_tdo output is tied to tx_bscan_tdi input and between adjacent lanes the tx_bscan_tdo output is tied to the next higher lanes rx_bscan_tdi input.
input	rx_bscan_ext_shiftdr	CMOS	rx_bscan_ext_clockdr	PMA Rx boundary scan enable
input	rx_bscan_ext_clockdr	CMOS	async	PMA Rx boundary scan data sample clock
input	rx_bscan_ext_pc	CMOS	async	PMA Rx boundary scan preload clock
input	rx_bscan_ext_ac	CMOS	async	PMA Rx boundary scan AC mode
input	rx_bscan_ext_tdi	CMOS	async	PMA Rx boundary scan test in - connected to rx_bscan_tdi input for lane 0
Boundary scan control interface (Internal and External)				
input	xcvr_bscan_mode_en	CMOS	async	PMA Transceiver boundary scan mode enable : This signal enables boundary scan mode.

Table 5: PHY manufacturing test and diagnostics related pin list (Continued)

2.5 Un-supported PHY/PIPE Interface Signals

The following PIPE interface signals are not supported by the PHY:

- BlockAlignControl
- EncodeDecodeBypass (for 8b/10b data, supported for 128b/13xb data)
- RxStandBy / RxStandByStatus - Turning off Rx in P0 or PCIe P0s not supported.
- RxPresetHint[2:0] - Not recommended for use by PIPE specification.
- FS[5:0] / LF[5:0] - Not needed by PHY for far-end transmitter equalization.
- LinkEvaluationFeedbackFigureMerit[7:0] - LinkEvaluationFeedbackDirection implemented instead.
- RxEqInProgress - Not required by PHY.
- SRISEnable - By default, PHY is enabled for SRIS operation.
- PCLK Rate - the PCLK rate is determined based on the selected data rate and PIPE data bus width (16- or 32-b).
- PowerPresent
- PclkChangeOk / PclkChangeAck - Not needed as PCLK rate change not supported by PHY.
- ElasticBufferLocation[N:0]
- AsyncPowerChangeAck - Not needed as PHY does not support a power state change where PCLK is not active in either power state.

- CLKREQ# This pin is defined in the PCIe spec. It is expected to be implemented and controlled outside of the PHY.

2.6 Digital Test Bus

The digital test bus is an optional interface that allow monitoring of selected PMA interface signals and clocks. The following table describes the PMA signals provided based on the MUX selection.

• nnn - selects the lane number.
• All dtb_mux_sel values not in the above table will select the same dtb_data output as dtb_mux_sel == 5'b0000.

dtb_data [bit]	dtb_mux_sel		
	5'b00000	5'b00001	5'b00010
0	cmn_ssm_state[0]	cmn_pllsm0_state[0]	tx_sfifo_align_bump_in_ln_0
1	cmn_ssm_state[1]	cmn_pllsm0_state[1]	tx_sfifo_align_bump_out_ln_0
2	cmn_ssm_state[2]	cmn_pllsm0_state[2]	tx_sfifo_enq_reset_n_in_ln_0
3	cmn_ssm_state[3]	cmn_pllsm0_state[3]	tx_sfifo_enq_reset_n_out_ln_0
4	cmn_ssm_state[4]	cmn_pllsm0_state[4]	tx_sfifo_align_bump_in_ln_1
5	cmn_ssm_state[5]	cmn_pllsm0_state[5]	tx_sfifo_align_bump_out_ln_1
6	cmn_ssm_state[6]	cmn_pllsm0_state[6]	tx_sfifo_enq_reset_n_in_ln_1
7	cmn_ssm_state[7]	cmn_pllsm0_state[7]	tx_sfifo_enq_reset_n_out_ln_2
8	cmn_ssm_state[8]	cmn_pllsm0_state[8]	tx_sfifo_align_bump_in_ln_2
9	cmn_reset_n	cmn_pllsm0_state[9]	tx_sfifo_align_bump_out_ln_2
10	cmn_ready	cmn_pllsm0_state[10]	tx_sfifo_enq_reset_n_in_ln_2
11	cmn_refclk_active	cmn_pllsm0_state[11]	tx_sfifo_enq_reset_n_out_ln_2
12	cmn_refclk_disable	cmn_pllsm1_state[0]	tx_sfifo_align_bump_in_ln_3
13	cmn_macro_suspend_req	cmn_pllsm1_state[1]	tx_sfifo_align_bump_out_ln_3
14	cmn_macro_suspend_ack	cmn_pllsm1_state[2]	tx_sfifo_enq_reset_n_in_ln_3
15	cmn_ref_clk0_clk_gate_en	cmn_pllsm1_state[3]	tx_sfifo_enq_reset_n_out_ln_3
16	cmn_pll0_en	cmn_pllsm1_state[4]	tx_sfifo_align_bump_in_ln_4
17	cmn_pll0_locked	cmn_pllsm1_state[5]	tx_sfifo_align_bump_out_ln_4
18	cmn_pll0_disabled	cmn_pllsm1_state[6]	tx_sfifo_enq_reset_n_in_ln_4
19	cmn_pll0_ready	cmn_pllsm1_state[7]	tx_sfifo_enq_reset_n_out_ln_4
20	cmn_pll0_mode_sel	cmn_pllsm1_state[8]	tx_sfifo_align_bump_in_ln_5
21	cmn_pll1_en	cmn_pllsm1_state[9]	tx_sfifo_align_bump_out_ln_5
22	cmn_pll1_locked	cmn_pllsm1_state[10]	tx_sfifo_enq_reset_n_in_ln_5
23	cmn_pll1_disabled	cmn_pllsm1_state[11]	tx_sfifo_enq_reset_n_out_ln_5
24	cmn_pll1_ready	cmn_reset_n	tx_sfifo_align_bump_in_ln_6
25	cmn_pll1_mode_sel	cmn_ready	tx_sfifo_align_bump_out_ln_6
26	cmn_ref_clk_dig_sel	cmn_macro_suspend_req	tx_sfifo_enq_reset_n_in_ln_6
27	cmn_ref_clk_int_mode[0]	cmn_macro_suspend_ack	tx_sfifo_enq_reset_n_out_ln_6
28	cmn_ref_clk_int_mode[1]	cmn_pll0_en	tx_sfifo_align_bump_in_ln_7
29	cmn_ref_clk0_mode[0]	cmn_pll1_en	tx_sfifo_align_bump_out_ln_7
30	cmn_ref_clk0_mode[1]	cmn_pll0_ready	tx_sfifo_enq_reset_n_in_ln_7
31	0	cmn_pll1_ready	tx_sfifo_enq_reset_n_out_ln_7

Table 6: Digital Test Bus A

dtb_data [bit]	dtb_mux_sel		
	5'b01nnn	5'b10nnn	5'b11nnn
0	xcvr_psm_state_ln_{nnn}[0]	xcvr_power_state_req_ln_{nnn}[0]	tx_elec_idle_ln_{nnn}
1	xcvr_psm_state_ln_{nnn}[1]	xcvr_power_state_req_ln_{nnn}[1]	tx_lfps_en_ln_{nnn}
2	xcvr_psm_state_ln_{nnn}[2]	xcvr_power_state_req_ln_{nnn}[2]	tx_get_local_preset_coef_ln_{nnn}
3	xcvr_psm_state_ln_{nnn}[3]	xcvr_power_state_req_ln_{nnn}[3]	tx_local_preset_index_ln_{nnn}[0]
4	xcvr_psm_state_ln_{nnn}[4]	xcvr_power_state_req_ln_{nnn}[4]	tx_local_preset_index_ln_{nnn}[1]
5	xcvr_psm_state_ln_{nnn}[5]	xcvr_power_state_ack_ln_{nnn}[0]	tx_local_preset_index_ln_{nnn}[2]
6	xcvr_psm_state_ln_{nnn}[6]	xcvr_power_state_ack_ln_{nnn}[1]	tx_local_preset_index_ln_{nnn}[3]
7	xcvr_psm_state_ln_{nnn}[7]	xcvr_power_state_ack_ln_{nnn}[2]	tx_local_tx_coef_valid_ln_{nnn}

Table 7: Digital Test Bus B

dtb_data [bit]	dtb_mux_sel		
	5'b01nnn	5'b10nnn	5'b11nnn
8	xcvr_psm_state_ln_{nnn}[8]	xcvr_power_state_ack_ln_{nnn}[3]	tx_vmargin_ln_{nnn}[0]
9	xcvr_psm_state_ln_{nnn}[9]	xcvr_power_state_ack_ln_{nnn}[4]	tx_vmargin_ln_{nnn}[1]
10	xcvr_psm_state_ln_{nnn}[10]	xcvr_standard_mode_ln_{nnn}[0]	tx_vmargin_ln_{nnn}[2]
11	xcvr_psm_state_ln_{nnn}[11]	xcvr_standard_mode_ln_{nnn}[1]	tx_low_power_swing_en_ln_{nnn}
12	xcvr_psm_state_ln_{nnn}[12]	xcvr_data_width_ln_{nnn}[0]	tx_cmn_mode_en_ext_ln_{nnn}
13	xcvr_psm_state_ln_{nnn}[13]	xcvr_data_width_ln_{nnn}[1]	tx_rcv_detect_en_ln_{nnn}
14	xcvr_psm_state_ln_{nnn}14[]	xcvr_data_width_ln_{nnn}[2]	tx_rcv_detect_done_{nnn}
15	xcvr_psm_state_ln_{nnn}[15]	tx_sfifo_align_bump_in_ln_{nnn}	tx_rcv_detected_ln_{nnn}
16	xcvr_psm_state_ln_{nnn}[16]	tx_sfifo_align_bump_out_ln_{nnn}	rx_signal_detect_ln_{nnn}
17	xcvr_psm_state_ln_{nnn}[17]	tx_sfifo_enq_reset_n_in_ln_{nnn}	rx_lfps_detect_ln_{nnn}
18	xcvr_psm_state_ln_{nnn}[18]	tx_sfifo_enq_reset_n_out_ln_{nnn}	rx_termination_ln_{nnn}
19	xcvr_psm_state_ln_{nnn}[19]	cmn_ready	rx_sig_det_en_ext_ln_{nnn}
20	xcvr_psm_state_ln_{nnn}[20]	cmn_macro_suspend_req	rx_eq_training_data_valid_ln_{nnn}
21	xcvr_psm_state_ln_{nnn}[21]	cmn_macro_suspend_ack	rx_eq_training_ln_{nnn}
22	xcvr_psm_state_ln_{nnn}[22]	cmn_pll0_en	rx_eq_eval_ln_{nnn}
23	xcvr_pm_state_ln_{nnn}[23]	cmn_pll0_ready	rx_eq_eval_status_ln_{nnn}
24	xcvr_psm_state_ln_{nnn}[24]	cmn_pll1_en	rx_eq_eval_complete_ln_{nnn}
25	xcvr_psm_state_ln_{nnn}[25]	cmn_pll0_ready	rx_link_eval_fb_dir_change_ln_{nnn}[0]
26	cmn_reset_n	cmn_refclk_active	rx_link_eval_fb_dir_change_ln_{nnn}[1]
27	xcvr_link_reset_n_ln_{nnn}	cmn_refclk_disable	rx_link_eval_fb_dir_change_ln_{nnn}[2]
28	xcvr_lane_suspend_ln_{nnn}	xcvr_link_reset_n_ln_{nnn}	rx_link_eval_fb_dir_change_ln_{nnn}[3]
29	xcvr_pll_clk_en_ln_{nnn}	xcvr_lane_suspend_ln_{nnn}	rx_link_eval_fb_dir_change_ln_{nnn}[4]
30	xcvr_pll_clk_en_ack_ln_{nnn}	xcvr_pll_clk_en_ln_{nnn}	rx_link_eval_fb_dir_change_ln_{nnn}[5]
31	cmn_ready	xcvr_pll_clk_en_ack_ln_{nnn}	rx_cdrlf_fphl_locked_ln_{nnn}

Table 7: Digital Test Bus B (Continued)

3 Configuration

As described in the PHY Overview, the Torrent multi-protocol multi-link PHY supports multiple serial standards, many of which can operate simultaneously. This section describes the details of the PHY configuration. Note: The Ethernet links in these tables are 1G, 2.5G or 5G Ethernet.

3.1 Multi-link / multi-protocol support

The PHY supports simultaneous operation of independent links of the following PHY configurations:

PCIe	USB3	SATA	DP/ eDP Tx	Ethernet	JESD204B	XFI/ USXGMII	Description
1+							**PCIe only**: N x1 links[6]
	1+						**USB3 only**: N links
		1+					**SATA only**: N links
			1+				**DP/eDP Tx only**: Max of 2, where each link can have 1, 2 or 4 lanes.
				1+			**Ethernet only**: N links
					1+		**JESD204B only**: Max of 2 independent links
						1+	**XFI/USXGMII only**: N links
1	1+						**PCIe + USB3** (No SSC for PCIe): 1 PCIe link (1xM); P USB3 links.
1+	1+						**PCIe + USB3** (PCIe and USB3 same SSC): M lanes of x1 PCIe links[6] and P USB3 links.
1		1+					**PCIe + SATA**: 1 PCIe link (1xM) and P SATA links.
1			1				**PCIe + DP/eDP Tx**: 1 PCIe link (1xM) and 1 DP/eDP Tx link (1xP)
1+				1+			**PCIe (no SSC) + Ethernet**: M lanes of x1 PCIe (no SSC) links[6] and P Ethernet links
1				1+			**PCIe (SSC) + Ethernet**: 1 link of PCIe (with SSC) + P Ethernet links

Table 8: Supported PHY configurations

PCIe	USB3	SATA	DP/ eDP Tx	Ethernet	JESD204B	XFI/ USXGMII	Description
1					1		**PCIe + JESD204B**: 1 PCIe link (1xM) and 1 JESD204B link
1						1+	**PCIe + XFI/USXGMII**: 1 PCIe link (1xM) and P XFI/USXGMII links.
	1+	1+					**USB3 + SATA**: M USB3 links and P SATA links
	1+		1				**USB3 + DP/eDP Tx**: M USB3 links and 1 DP/eDP Tx link (1xP)
	1+			1+			**USB3 + Ethernet**: M USB3 links and P Ethernet links
	1+				1		**USB3 + JESD204B**: M USB3 links and 1 JESD204B link
	1+					1+	**USB3 + XFI/USXGMII**: M USB3 links and P XFI/USXGMII links
		1+	1				**SATA + DP/eDP Tx**: M SATA links and 1 DP/eDP Tx link (1xP)
		1+			1		**SATA + JESD204B**: M SATA links and 1 JESD204B link
		1+				1+	**SATA + XFI/USXGMII**: M SATA links and P XFI/USXGMII links
			1		1		**DP/eDP + JESD204B**: 1 DP/eDP Tx link (1xM) and 1 JESD204B link
			1			1+	**DP/eDP + XFI/USXGMII**: 1 DP/eDP Tx link (1xM) and P XFI/USXGMII links

Table 8: Supported PHY configurations (Continued)

Notes:
1. 1+ indicates the PHY can support 1 or more independent links for the protocol when in this configuration.
2. 1 indicates the PHY can support only 1 link for the protocol when in this configuration.
3. N = number of PHY lanes.
4. M = number of PHY lanes configured for the first selected protocol (left to right in the table above).
5. P = N-M (i.e. remaining lanes)
6. Or, fewer links, when 1 or more links are multi-lane links.

3.2 Multi-Lane Links

Multi-lane links (PCIe and DP/eDP) are configured using the phy_link_cfg_ln_<1:n> PHY inputs. For each multi-lane link, 1 lane must be designated as the link master. This must be the lowest lane number in the link. phy_link_cfg_ln_<> for this lane must be asserted high and phy_link_cfg_ln_<> for the other lanes must be de-asserted low. (Of note: phy_link_cfg_ln_<> must be asserted high for all single lane links.) There is no phy_link_cfg_ln_0 PHY input because it is unnecessary. Lane 0 must always be a link master.

For example, a 1x4 PCIe link can be created from any 4 adjacent PHY lanes, such as lanes 2, 3, 4 and 5. In this case, phy_link_cfg_ln_2 must be asserted high, while phy_link_cfg_ln_<3:5> are de-asserted low.

On the PIPE and Raw SerDes interfaces, certain PHY pins are designated as link signals. For these pins, only the master lane's signals are used and the pins for slave lanes are ignored.

3.3 PHY PLL Configuration

As described in the PMA specification, the PMA PLLs (PLL0 and PLL1) must be configured based on which standards will be enabled on each lane. Table 9 is a summary of the PLL mapping based on the PHY configuration.

PHY configuration	PLL0	PLL1
Single link PCIe only	All lanes	Not used/disabled
Multi-link PCIe only	PCIe Gen1/2 lanes	PCIe Gen 3 lanes
Multi-link USB3 only	All lanes	Not used/disabled
Multi-link SATA only	All lanes	Not used/disabled
Multi-link DP/eDP Tx only (2 links max)	DP/eDP link 0 lanes	DP/eDP link 1 lanes
Multi-link Ethernet only	All lanes	Not used/disabled
Multi-link JESD204B only (2 links max)	JESD204B link 0 lanes	JESD204B link 1 lanes
Multi-link XFI/USXGMII only	All lanes	Not used/disabled
Single link PCIe (non-SSC) + USB3	PCIe lanes	USB lanes
Multi-link PCIe + USB3 (all links use same SSC)	PCIe Gen1/2 USB3	PCIe Gen3
Single link PCIe + multi-link SATA	PCIe link	SATA links
Single link PCIe + single link DP/eDP Tx	PCIe link	DP/eDP link
Multi-link PCIe (non-SSC) + multiple Ethernet links	PCIe Gen1/2 Ethernet	PCIe Gen3
Single link PCIe (SSC) + multiple Ethernet links	PCIe link	Ethernet link
Single link PCIe + single link JESD204B	PCIe link	JESD204B link
Single link PCIe + multiple XFI/USXGMII links	PCIe link	XFI/USXGMII link
Multi-link USB3 + multi-link SATA	USB3 links	SATA links
Multi-link USB3 + single link DP/eDP Tx	USB3 links	DP/eDP link
Multi-link USB3 + multi-link Ethernet	USB3 links	Ethernet links
Multi-link USB3 + single link JESD204B	USB3 links	JESD204B link
Multi-link USB3 + multi-link XFI/USXGMII	USB3 links	XFI/USXGMII links
Multi-link SATA + single link DP/eDP Tx	SATA links	DP/eDP link
Multi-link SATA + single link JESD204B	SATA links	JESD204B link
Multi-link SATA + multi-link XFI/USXGMII	SATA links	XFI/USXGMII links
Single link DP/eDP Tx + single link JESD204B	DP/eDP link	JESD204B link
Single link DP/eDP Tx + multi-link XFI/USXGMII	DP/eDP link	XFI/USXGMII links

Table 9: PLL Mapping based on PHY Configuration

The PMA specification and Programmer's Guide describes how to configure the PLLs based on the PHY configuration.

3.4 PHY link configuration

The mode of operation of each link (PCIe, USB, SATA or Ethernet) is configured through the phy_l<00:nn>_mode pins and PMA registers. Non-SSC PCIe is the default register configuration for each lane. All other modes of operation require additional configuration and the PMA specification describes the register configurations required for each protocol.

At the PHY level, the PHY_PLL_CFG register must be configured based on the PHY configuration.

- PHY_PLL_CFG[0]: Set to 1 if PHY is configured with only a single PCIe link (such the all PCIe rates are driven by PLL0). Otherwise, clear to 0.
- PHY_PLL_CFG[1]: Set to 1 if PHY is using both PLL0 and PLL1. Otherwise, clear to 0, if only using PLL0.

The default is single-link PCIe with only PLL0 being used.

4 PHY Clocking And Reset

This section describes the details of the PHY clocking and reset functions. Note that what is described here is the top level function. For details on the PCS and PMA clocking and reset, see the respective specifications.

4.1 APB And TAP Clocking And Reset

In the PHY macro, the APB and the TAP clock and reset functions are related. This is due to the diagnostic access to the internal CDB that the TAP has. Figure 2 on page 35 illustrates these clock and reset functions. The following points should be noted about these functions.

- The clock and reset selection and synchronization components are located inside the Async APB Interface Slave module.
- When the APB clock source select bit in the PHY macro diagnostic control register on page 46 is set, the tap_tck drives the CDB bus clock, otherwise it is driven by the apb_pclk.
- When the APB clock source select bit in the PHY macro diagnostic control register on page 46 is set, only the Diagnostic APB reset bit in the PHY macro diagnostic control register on page 46 can reset the CDB, otherwise either the Diagnostic mode APB reset bit or the apb_preset_n can reset the CDB.
- The tap_trst_n will only reset the TAP Complex. It will not reset the APB and CDB bus components.
  - To reset the APB alone, from the TAP Complex, one must clear and set the Diagnostic APB reset bit in the PHY macro diagnostic control register on page 46.
  - To reset both the APB and the TAP Complex, both the Diagnostic APB reset bit and tap_trst_n must be activated. The following steps can be used to accomplish this.
    - Activate the Diagnostic APB reset bit using the PHY macro diagnostic control register on page 46.
    - Activate the tap_trst_n signal. This will set the Diagnostic APB reset bit.
    - Deactivate the tap_trst_n signal.
- Not shown in this figure is the CDB controller module and supporting logic. The CDB clock and reset drive these components. Once the CDB passes through the controller, the CDB bus clock is gated such that it is only active when the PHY macro is being addressed on the CDB.

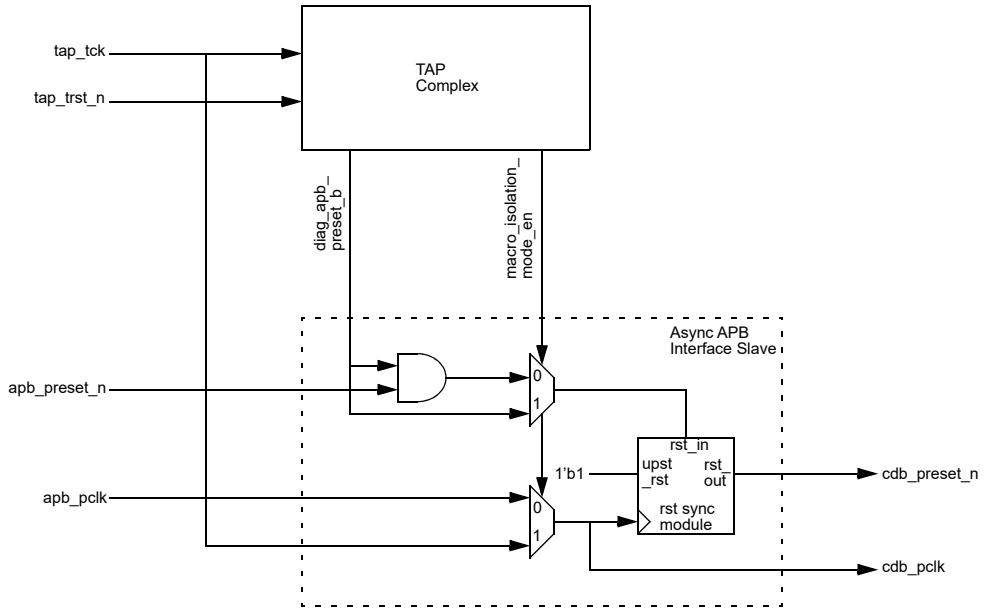

Figure 2: APB and TAP clocking and reset

4.2 PSM and Reference Path Clocking

Figure 3 on page 36 illustrates the clocking associated with the reference and PSM clocks. The selection of the internal (pma_cmn_refclk_int) or external (cmn_refclk_p / cmn_refclk_m) clock as the reference clock source for the PMA PLLs and digital reference clocks are controlled by the PHY pma_cmn_pll0_refclk_sel, pma_cmn_pll1_refclk_sel, pma_cmn_refclk_mode, pma_cmn_refclk_int_mode and pma_cmn_refclk_dig_sel inputs (see PMA specification for details).

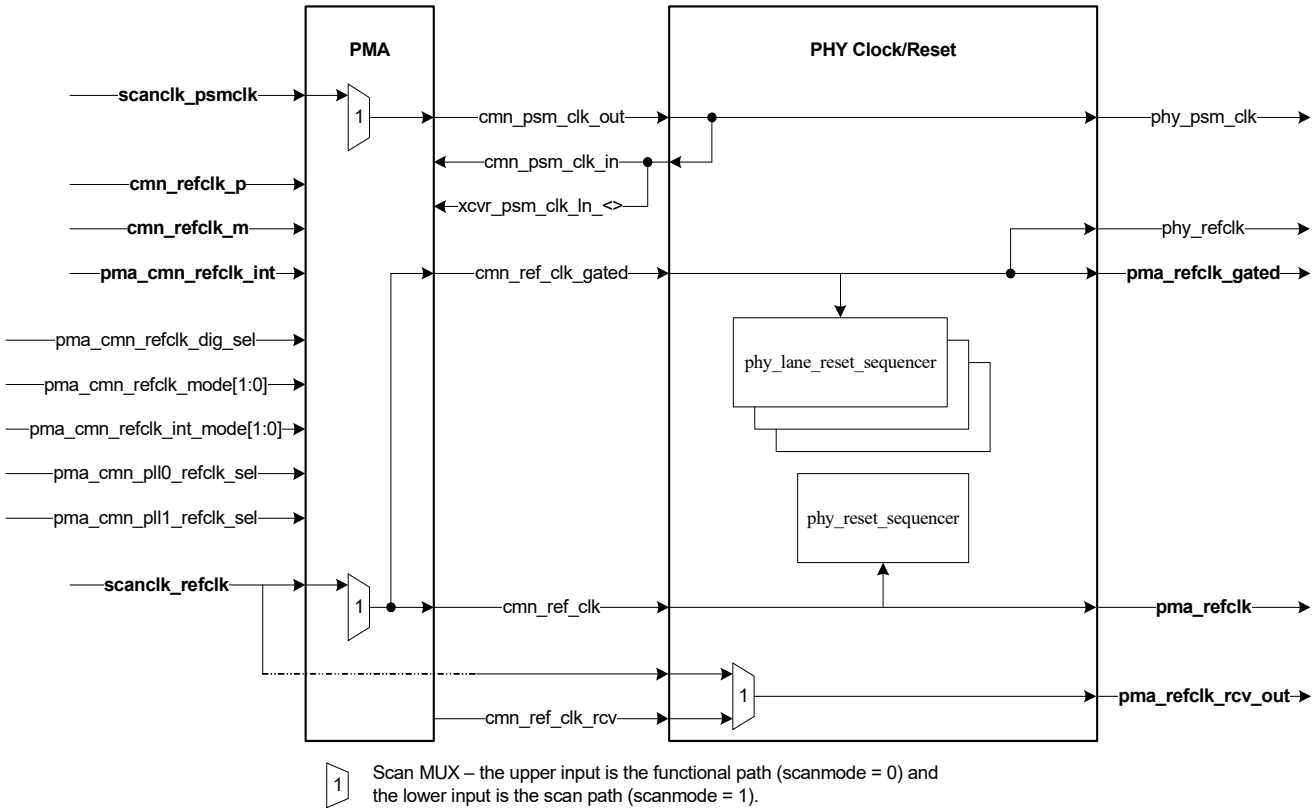

Figure 3: PHY/PCS reference and PSM clocking block diagram

Of note:

- pma_refclk_rcv_out (PHY output clock) is free running once enabled (by setting PHY_PMA_CMN_CTRL1[6]) regardless of the PHY power state (provided the reference clock to the PHY remains active).
- pma_refclk and pma_refclk_gated (PHY output clocks) are provided as diagnostic outputs.

4.3 Data Path Clocking

Figure 4 on page 37 illustrates the clocking associated with the data path clocks. The following points should be noted about this function.

- For multi-lane links, the slave lanes receive their data rate clock from the master lane's xcvr_pll_clk_datart_ln_* clock output through a daisy chain MUXs from one lane to another.
- The data rate clock is provided back to the PMA's tx_td_clk_ln_* input to drive the write-side of the lane's TX Sync FIFO. For PIPE modes, it is driven directly from the link master's xcvr_pll_clk_datart_ln_* PMA clock output (PHY internal clock path). For Raw SerDes mode, it is driven from its pma_tx_td_clk_ln_* PHY input, which is ultimately driven by the lane's xcvr_pll_clk_datart_ln_* PMA clock output through the pma_pllclk_datart_ln_* PHY clock output (PHY external clock path).
- pipe_l<>_clk_in/pcs_pipe_l<>_clk_in are only present for PHY configurations that support source synchronous PIPE mode. pipe_l<>_clk_in (for the master lane in each link) is expected to be driven from the associated master lane's pipe_l<>_clk PHY output.

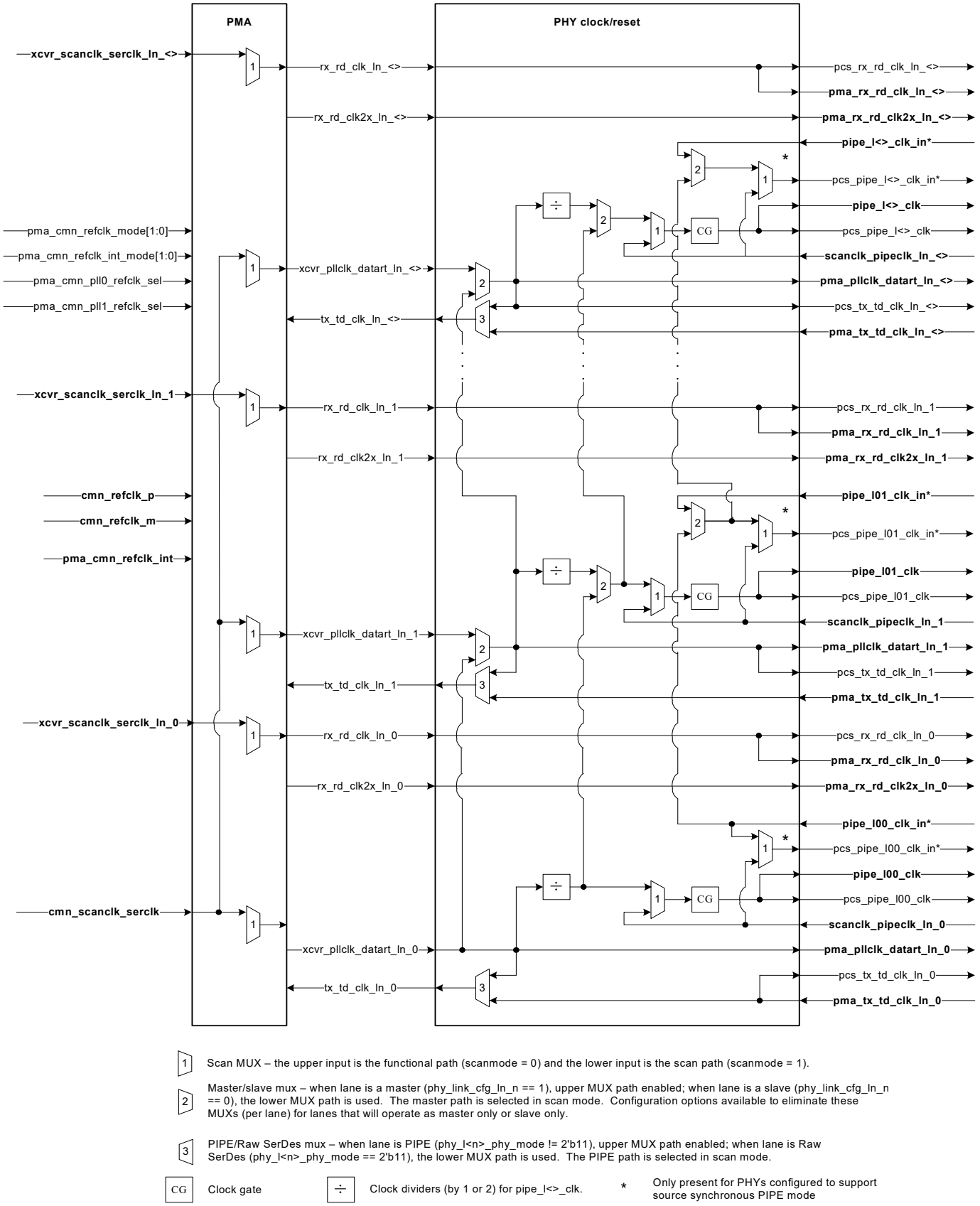

1 Scan MUX – the upper input is the functional path (scanmode = 0) and the lower input is the scan path (scanmode = 1).

2 Master/slave mux – when lane is a master (phy_link_cfg_ln_n == 1), upper MUX path enabled; when lane is a slave (phy_link_cfg_ln_n == 0), the lower MUX path is used. The master path is selected in scan mode. Configuration options available to eliminate these MUXs (per lane) for lanes that will operate as master only or slave only.

3 PIPE/Raw SerDes mux – when lane is PIPE (phy_l<n>_phy_mode != 2'b11), upper MUX path enabled; when lane is Raw SerDes (phy_l<n>_phy_mode == 2'b11), the lower MUX path is used. The PIPE path is selected in scan mode.

CG Clock gate

÷ Clock dividers (by 1 or 2) for pipe_l<>_clk.

* Only present for PHYs configured to support source synchronous PIPE mode

Figure 4: PHY/PCS data rate clocking block diagram

Per lane configuration options are provided (through ‘defines) to simplify the data rate clock tree by eliminating the master/ slave MUXs for lanes that can only operate as slave lanes or as link master lanes. The following diagrams show the change to the data rate clock path for a master only lane and a slave only lane. For both cases, the 3 master/slave MUXs have been removed.

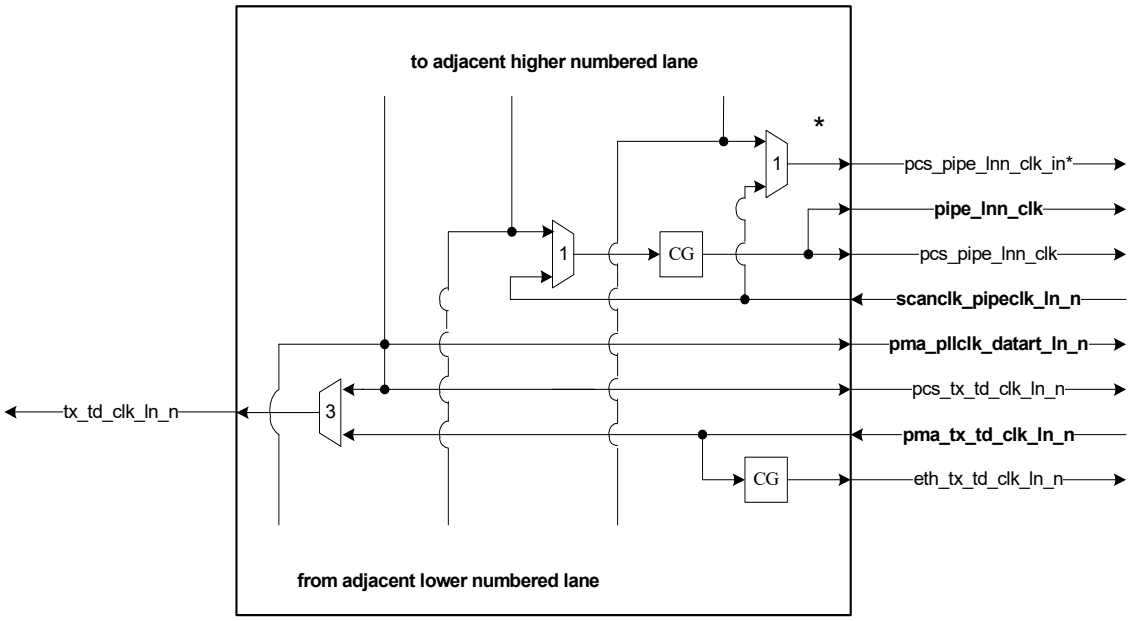

Figure 5: Data rate clock path for a slave only lane

Please note that the data rate clocks can only come from the adjacent lane.

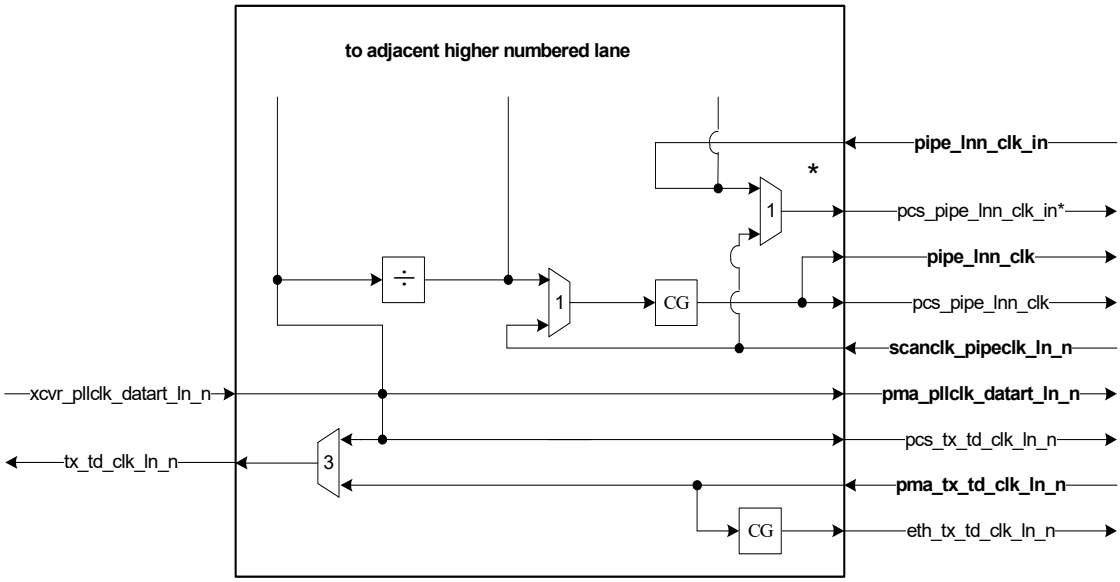

Figure 6: Data rate clock path for a master only lane

Please note that the data rates clocks can only be generated from the xcvr_pllclk_datart_ln_* PMA output for the lane and are not available from the adjacent lane.

4.4 Additional PHY clock outputs

The PHY provides additional clock outputs for use by external controllers: pma_pllclk_fullrt_ln_<>, pcs_mac_clk_ln_<>, pcs_mac_clk_divx0_ln_<> and pcs_mac_clk_divx1_ln_<>. These clocks are not used by the internal PHY logic. Figure 7 on page 39 illustrates the clocking for these output clocks.

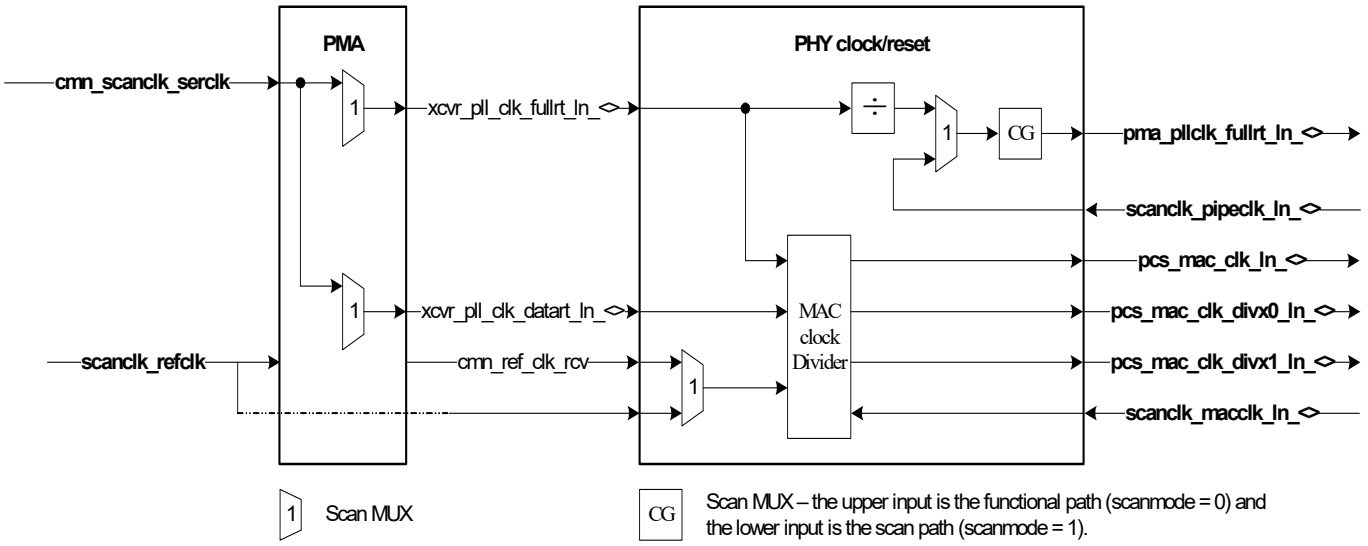

Figure 7: Full rate and MAC Clk diagram

4.4.1 MAC clock divider

The MAC clock divider provides clocks typically used by Ethernet PCSs and MACs. Figure 8 on page 39 is a diagram of the MAC clock divider.

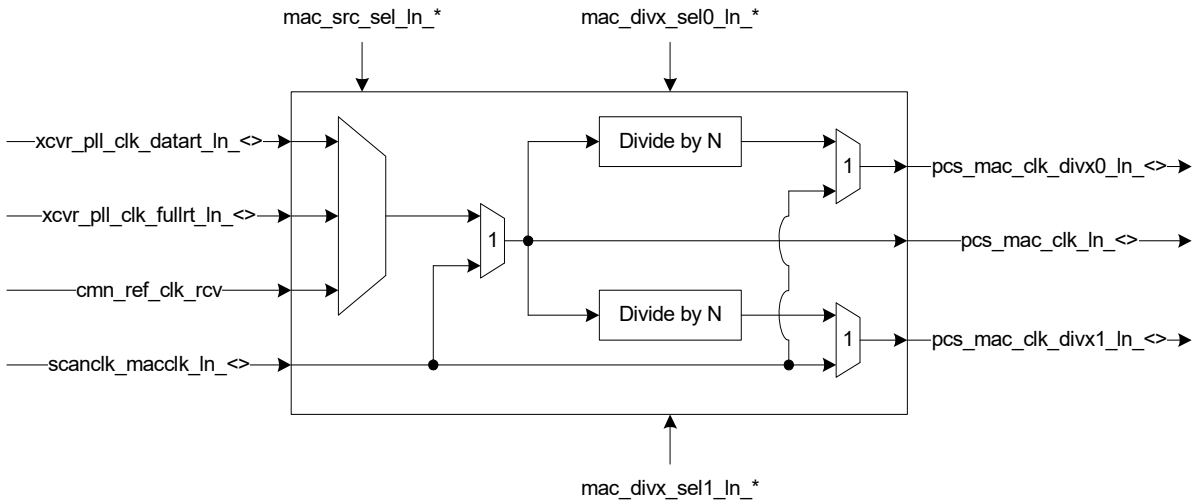

Figure 8: PCS MAC clock generation

pcs_mac_clk* clocks are used by Ethernet PCS based on the selected mode of operation.

4.5 PHY reset

- All resets are active low, asynchronously activated, and synchronously deactivated.
- phy_reset_n is master reset for entire PHY. Asserting phy_reset_n will drive reset to the entire PHY, except for APB and TAP controller registers.
- When phy_reset_n is released, the PHY reset sequencer controls the release of the various resets for the entire macro, as follows:
  - After phy_reset_n is released, if enabled, the auto-speedup configuration logic writes the PCS and PMA registers for speedup prior to de-asserting cmn_reset_n to the PMA. Upon completion of auto-configuration or if not enabled, cmn_reset_n going to the PMA is released.
  - The PHY reset sequencer waits for cmn_ready from the PMA to go active, indicating common modules are powered up, calibrated, and the PLL has locked.
  - At this point, all resets going to the PCS are synchronously released (1 for each internal PCS clock domain).

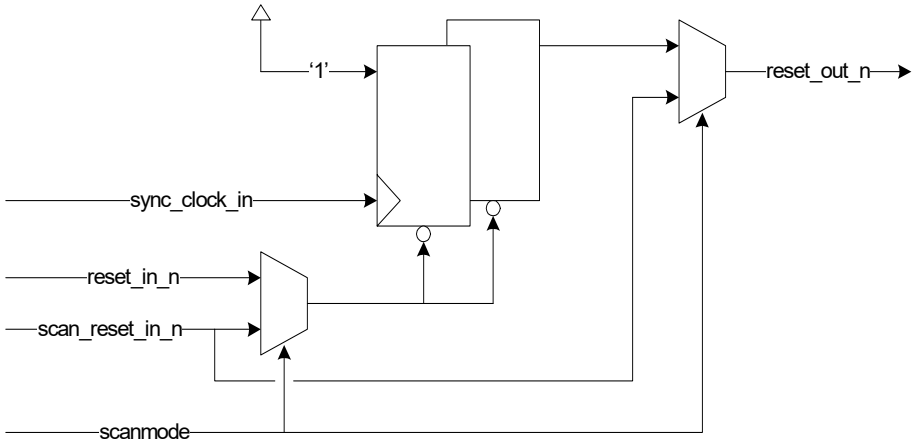

Figure 9: Reset synchronizer

4.6 Link reset

Each link (its PCS logic and PMA lanes) can be reset independently through assertion low of phy_l{nn:00}_reset_n for the master lane of the link. The link is re-enabled by de-asserting phy_l{nn:00}_reset_n and is controlled by the PHY lane reset sequencer.

4.7 Tx Synchronous FIFO control

The PMA Tx SFIFOs for each lane have 2 outputs and 2 inputs that are used to synchronize the Tx SFIFOs for all lanes in a multi-lane link. This is needed in order to meet lane-to-lane Tx skew. The 2 Tx SFIFO outputs are: tx_sfifo_align_bump_out_ln_<> and tx_sfifo_enq_reset_n_out_ln_<>. The 2 Tx SFIFO inputs are: tx_sfifo_align_bump_in_ln_<> and tx_sfifo_enq_reset_n_in_ln_<>. tx_sfifo_align_bump_in_ln_<> for each lane must lane

must be driven from the link master lane's tx_sfifo_align_bump_out_ln_<>. Similarly, tx_sfifo_enq_reset_n_ln_<> for each lane must be driven from the link master lane's tx_sfifo_enq_reset_n_ln_<> after synchronization to the links datarate clock. For multi-lane links, a daisy chain structure similar to the one used for the data rate and PIPE clocks is used, where each PMA input is selected based on phy_link_cfg_ln_<> for the lane. If lane's phy_link_cfg_ln_<> PHY input is high, the lane's PMA outputs are used. If the lane's phy_link_cfg_ln_<> PHY inputs is low, the adjacent lane's selection is used. Similar to the data rate clock path, these master/slave MUXs will be removed based on a configuration define (per lane) for slave only or master only lanes.

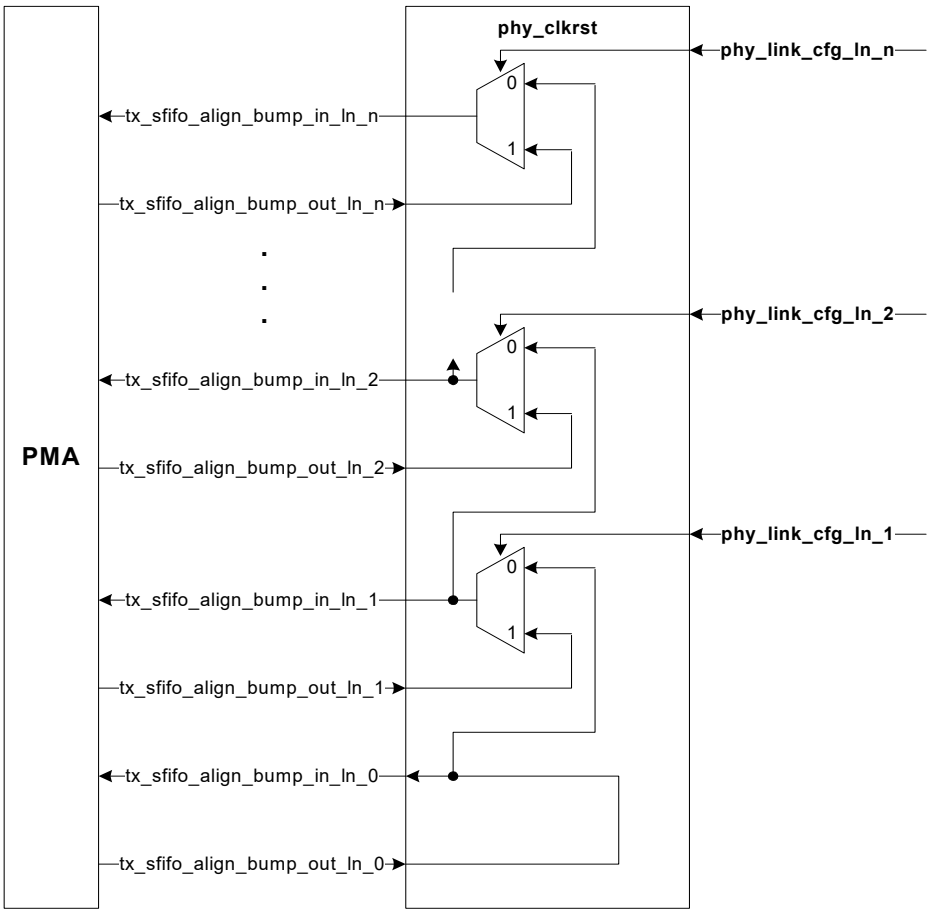

Figure 10: tx_sfifo_align_bump signaling

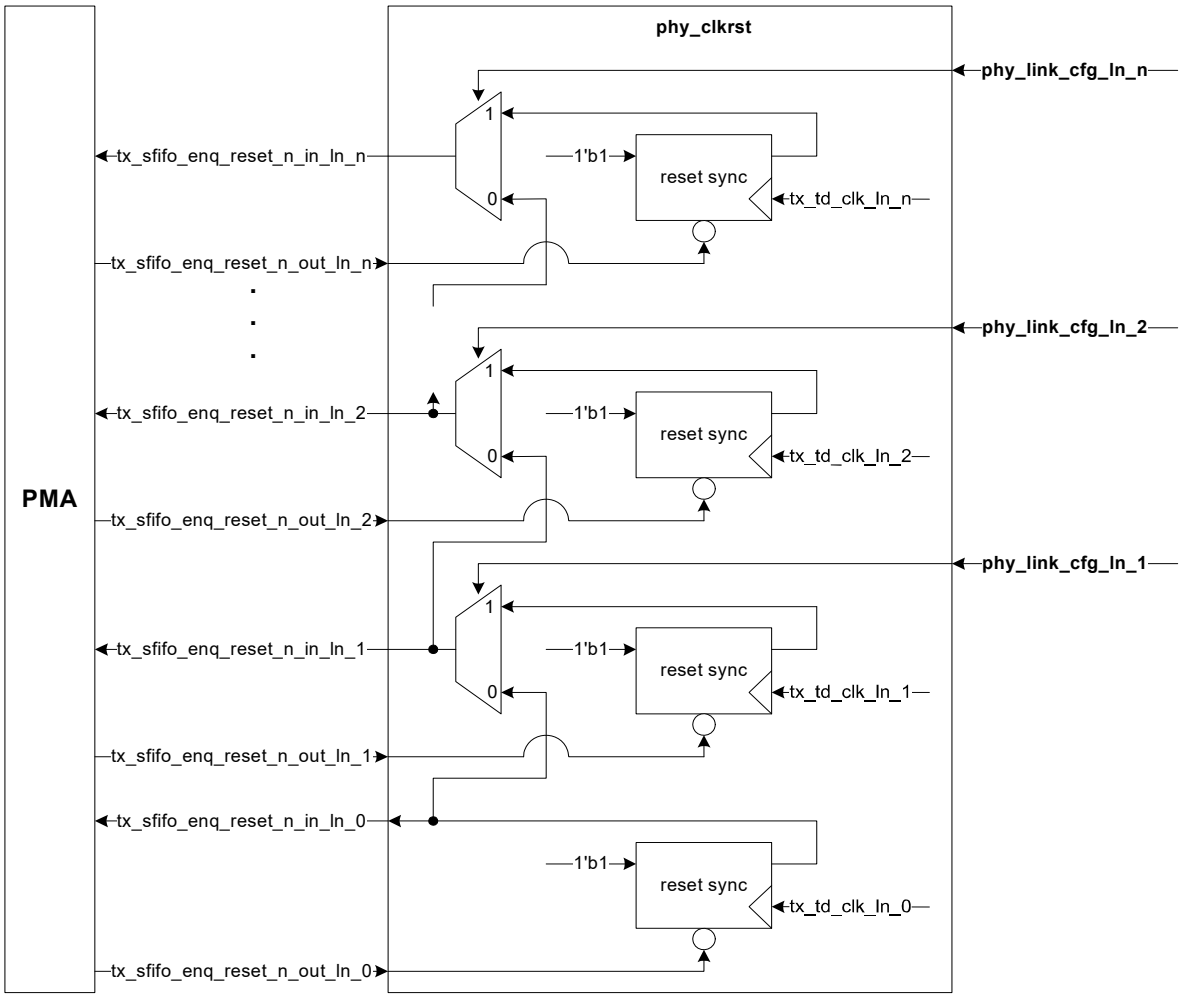

Figure 11: tx_sfifo_enq_reset_n signaling

5 PHY Internal CDB Access

The PHY macro contains an internal APB bus, which is known as the CDB bus. This is used to access configuration and diagnostic registers throughout the macro. There are two methods for accessing this CDB bus. The primary method of accessing the CDB bus is using the top level APB pins. The alternate method is using the TAP by reading and writing the PHY macro diagnostic control register on page 46. Arbitration between these two methods for access to the CDB is controlled by the Asynchronous APB Interface Slave module. Either the APB or the TAP can access the CDB, with the TAP having highest priority. Note that, activating either the apb_preset_n top level pin, or the diagnostic mode APB reset bit in the PHY macro diagnostic control register on page 46, will result in the CDB being reset.

This section assumes the reader is familiar with both the APB and TAP protocols. What is provided here is the necessary information to address the specific regions of the CDB address space. Additionally, the full register map for the macro top level CDB registers is provided. The full register address map for the PMA specific CDB registers is not described in this specification. See the PMA specification for details on these registers.

5.1 CDB Address Encoding

In this implementation, the APB address bus is 16 bits wide. Table 10 on page 43 illustrates the address mapping at the PHY level. Note that for PMA address space, one should see the PMA specification.

apb_paddr bits	Internal CDB address region
15:14	Internal CDB address space. • 2’b00 : Torrent PMA common module registers. • 2’b01 : Torrent PMA transmitter module registers. • 2’b10 : Torrent PMA receiver module registers. • 2’b11 : PCIe PHY macro top level registers.
13	When the PHY macro top level register space is selected, this bit selects PHY level PCS or PMA registers. • 1’b0 : PHY level PCS registers. • 1’b1 : PHY level PMA registers.
12	When the PHY macro top level register space is selected, this bit selects PHY level common or lane registers. • 1’b0 : PHY level common registers. • 1’b1 : PHY level lane registers.
11	Reserved - must be set to 1’b0.
10:8	When the PHY macro top level register space is selected, and lane registers are selected, these bits specify the lane being addressed. • 3’b000 : Lane 0 • 3’b001 : Lane 1 • 3’b010 - 3’b111 : Lane 2 - 7 When PHY level common registers are selected, these bits must be set to 4’b0000.
7:6	When the PHY macro top level register space is selected, these bits are reserved, and must be set to 2’b00.
5:0	When the PHY macro top level register space is selected, these bits specify up to 32 addressable registers for a given lane or common.

Table 10: CDB high level address space mapping

5.2 Top Level Register Address Space

The following table describes the address map for each of the registers within the macro top level register address region.

Address	Register name and location of detailed description
PHY/PCIe PCS Common Registers	
16'b11_0_0_0000_0000_0000	PIPE common control1 register on page 49
16'b11_0_0_0000_0000_0001	PIPE common control2 register on page 50
16'b11_0_0_0000_0000_0010	PIPE comma lock configuration1 register on page 50
16'b11_0_0_0000_0000_0011	PIPE comma lock configuration2 register on page 50
16'b11_0_0_0000_0000_0100	PIPE EIEOS lock configuration register on page 51
16'b11_0_0_0000_0000_0101	PIPE lane disable register on page 51
16'b11_0_0_0000_0000_0110	PIPE receiver detect inhibit register on page 51
16'b11_0_0_0000_0000_0111	PIPE RX electrical idle L1.x exit delay register on page 52
16'b11_0_0_0000_0000_1000	PHY common control isolation register on page 60
16'b11_0_0_0000_0000_1010	PHY state change monitor timeout on page 52
16'b11_0_0_0000_0000_1110	PHY PLL configuration register on page 52
16'b11_0_0_0000_0000_1111	PHY speedup control register on page 53
16'b11_0_0_0000_0001_0000	PHY External Reference Clock Detect Low Threshold register on page 53
16'b11_0_0_0000_0001_0001	PHY External Reference Clock Detect High Threshold register on page 53
16'b11_0_0_0000_0001_0010	PHY External Reference Clock Detect Measurement Interval register on page 53
16'b11_0_0_0000_0001_0011	PHY External Reference Clock Detect Delay register on page 54
16'b11_0_0_0000_0001_0100	PHY External Reference Clock Detect Isolation Control register on page 54
16'b11_0_0_0000_0010_0000	PHY USB3 Gen 2 pre-shoot configuration 0 register on page 56
16'b11_0_0_0000_0010_0001	PHY USB3 Gen 2 pre-shoot configuration 1 register on page 56
16'b11_0_0_0000_0010_0010	PHY USB3 Gen 2 de-emphasis configuration 0 register on page 56
16'b11_0_0_0000_0010_0011	PHY USB3 Gen 2 de-emphasis configuration 1 register on page 57
PHY/PCIe PCS Lane Registers **Note that there is a set of these register for each PMA lane (where nnn = 000 for lane 0).**	
16'b11_0_1_0nnn_0000_0000	PIPE TX control signal isolation register on page 61
16'b11_0_1_0nnn_0000_0001	PIPE Tx local preset coefficients low isolation register on page 61
16'b11_0_1_0nnn_0000_0010	PIPE Tx local preset coefficients high isolation register on page 61
16'b11_0_1_0nnn_0000_0011	PIPE TX Deemphasis low isolation register on page 62
16'b11_0_1_0nnn_0000_0100	PIPE Tx Deemphasis high isolation register on page 62
16'b11_0_1_0nnn_0000_0101	PIPE Tx local FS/LF isolation register on page 62
16'b11_0_1_0nnn_0000_0110	PCS PIPE TX Data low isolation register on page 62
16'b11_0_1_0nnn_0000_0111	PCS PIPE TX Data high isolation register on page 62
16'b11_0_1_0nnn_0000_1000	PCS PIPE RX control signal isolation register on page 63
16'b11_0_1_0nnn_0000_1001	PIPE Rx equalization evaluation isolation register on page 63
16'b11_0_1_0nnn_0000_1010	PHY link configuration isolation register on page 64
16'b11_0_1_0nnn_0000_1011	PCS PIPE Link control isolation register on page 64
16'b11_0_1_0nnn_0000_1100	PIPE USB loopback slave BER count register on page 64
16'b11_0_1_0nnn_0000_1110	PCS PIPE RX data low isolation register on page 65
16'b11_0_1_0nnn_0000_1111	PCS PIPE RX data high isolation register on page 65
16'b11_0_1_0nnn_0001_0000	Ethernet MAC clock configuration isolation register on page 65
16'b11_0_1_0nnn_0001_0001	Ethernet MAC clock divider isolation register on page 65
16'b11_0_1_0nnn_0001_0010	PHY interrupt status register on page 55
Torrent PMA Common Registers	
16'b11_1_0_0000_0000_0000	PMA common control1 register on page 57
16'b11_1_0_0000_0000_0001	PMA common control2 register on page 57
16'b11_1_0_0000_0000_0010	PMA SSM current state register on page 58
16'b11_1_0_0000_0000_0011	PMA PLL Raw SerDes control register on page 58
16'b11_1_0_0000_0000_0100	PMA common control signal isolation register on page 66
16'b11_1_0_0000_0000_0101	PMA PLL control0 isolation register on page 66
16'b11_1_0_0000_0000_0110	PMA PLL control1 isolation register on page 66
16'b11_1_0_0000_0000_1011	PMA PLL0 State Machine current state register on page 58
16'b11_1_0_0000_0000_1100	PMA PLL1 State Machine current state reg on page 58
16'b11_1_0_0000_0000_1111	PMA control isolation register on page 67
Torrent PMA Lane Registers **Note that there is a set of these register for each PMA lane (where nnn = 000 for lane 0).**	
16'b11_1_1_0nnn_0000_0000	PMA transceiver control register on page 59
16'b11_1_1_0nnn_0000_0001	PMA loopback control register on page 59
16'b11_1_1_0nnn_0000_0010	PMA PI position register on page 59

Table 11: Macro top level CDB register address map

Address	Register name and location of detailed description
16'b11_1_1_0nnn_0000_0011	PMA transceiver control isolation register on page 67
16'b11_1_1_0nnn_0000_0100	PMA Tx local preset coefficient low isolation register on page 68
16'b11_1_1_0nnn_0000_0101	PMA Tx local preset coefficient high isolation register on page 68
16'b11_1_1_0nnn_0000_0110	PMA Tx de-emphasis low isolation register on page 68
16'b11_1_1_0nnn_0000_0111	PMA Tx de-emphasis high isolation register on page 68
16'b11_1_1_0nnn_0000_1000	PMA Tx FS/LF isolation register on page 69
16'b11_1_1_0nnn_0000_1001	PMA Tx margin isolation register on page 69
16'b11_1_1_0nnn_0000_1010	PMA Link Mode isolation register on page 69
16'b11_1_1_0nnn_0000_1011	PMA Link Power State Control isolation register on page 69
16'b11_1_1_0nnn_0000_1101	PMA Rx equalization control isolation register on page 70
16'b11_1_1_0nnn_0000_1110	PMA low data isolation register on page 70
16'b11_1_1_0nnn_0000_1111	PMA high data isolation register on page 70
16'b11_1_1_0nnn_0001_0000	PMA Transceiver PSM current state low register on page 59
16'b11_1_1_0nnn_0001_0001	PMA Transceiver PSM current state high register on page 60

Table 11: Macro top level CDB register address map

5.3 PMA Setup

Refer to section 5 of the PMA specification for any PMA register configuration required (as necessary), which is different from the default.

6 PHY TAP Complex

6.1 TAP Controller

Table 12 on page 46 lists the custom data registers that are accessible, and their respective instructions and op-codes. Instructions and data bit order is LSB first. Note: These registers are only accesible through the TAP controller.

Instruction	Op-code	Register
EXTEST	4’b0000	Standard boundary scan reg
SAMPLE	4’b0001	Standard boundary scan reg
PRELOAD	4’b0010	Standard boundary scan reg
EXTEST_TRAIN	4’b0011	Standard boundary scan reg
EXTEST_PULSE	4’b0100	Standard boundary scan reg
BYPASS	4’b1111	Standard BYPASS register
CUSTOM_INSTR_1	4’b0101	PHY macro diagnostic control register on page 46
CUSTOM_INSTR_2	4’b0110	PHY macro diagnostic APB access address register on page 46
CUSTOM_INSTR_3	4’b0111	PHY macro diagnostic APB access write data register on page 47
CUSTOM_INSTR_4	4’b1000	PHY macro diagnostic APB access read data register on page 47
CUSTOM_INSTR_5	4’b1001	PHY macro diagnostic APB access control register on page 47
CUSTOM_INSTR_6-10	4’b1010 to 4’b1110	RESERVED

Table 12: TAP Supported Custom Data Register Instructions

6.2 Register Descriptions

Register Name:			PHY macro diagnostic control register
Register Address:			4’b0101
Register Description:			This register contains bits that are used to control the diagnostic features of the PHY macro.
Bits	**Type**	**Reset**	**Description**
1	R/W	1’b1	**Diagnostic mode APB reset** : This bit provides an alternate means for resetting the PHY macro APB. Activating this reset will reset the APB, regardless of whether the macro is in isolation mode or not. • 1’b0 : Reset is active • 1’b1 : Reset is not active Note : When isolation mode is not enabled, either the apb_preset_n or this bit will reset the APB. When macro isolation mode is enabled, only this bit will reset the APB.
0	R/W	1’b0	**APB clock source select** : This bit selects the clock source for the internal APB clock. • 1’b0 : The internal APB clock is driven from apb_pclk (PHY input). • 1’b1 : The internal APB clock is driven from tap_tck (PHY input).

Table 13: PHY macro diagnostic control register

Register Name:			PHY macro diagnostic APB access address register
Register Address:			4’b0110
Register Description:			This register contains the address to be accessed, when performing an APB access using the TAP.
Bits	**Type**	**Reset**	**Description**
15:0	R/W	16’h0000	**APB bus cycle address** : This field contains the address for the APB bus cycle.

Table 14: PHY macro diagnostic APB access address register

Register Name:			PHY macro diagnostic APB access write data register
Register Address:			4’b0111
Register Description:			This register contains the write data to be used, when performing an APB write access using the TAP.
Bits	**Type**	**Reset**	**Description**
15:0	R/W	16’h0000	**APB bus cycle write data** : This field contains the write data for an APB write.

Table 15: PHY macro diagnostic APB access write data register

Register Name:			PHY macro diagnostic APB access read data register
Register Address:			4’b1000
Register Description:			This register contains the read data that was returned after performing an APB read access using the TAP.
Bits	**Type**	**Reset**	**Description**
15:0	R/O	16’h0000	**APB bus cycle read data** : This field contains the read data after an APB read has completed.

Table 16: PHY macro diagnostic APB access read data register

Register Name:			PHY macro diagnostic APB access control register
Register Address:			4’b1001
Register Description:			This register contains bits that are used to control an APB access using the TAP.
Bits	**Type**	**Reset**	**Description**
2	R/W	1’b0	**APB bus cycle write / not read** : ABP bus cycle write / read indicator. • 1’b0 : Read cycle • 1’b1 : Write cycle
1	R/W	1’b0	**APB bus cycle request** : Setting this bit to a 1’b1 will initiate an APB bus cycle from the TAP complex. This bit must remain set to 1’b1 until after the APB bus cycle acknowledge bit goes active. After this, it must first be set to 1’b0 before initiating another bus cycles. Note that the PHY macro diagnostic APB access address register on page 46 and PHY macro diagnostic APB access write data register on page 47 registers, as well as the APB bus cycle write / not read bit in this register must be set to the desired values for the APB access prior to setting this bit.
0	R/O	1’b0	**APB bus cycle acknowledge** : This bit indicates when the current bus cycle initiated by writing a 1’b1 to the APB bus cycle request bit has completed. • 1’b0 : The current bus cycle has not completed. • 1’b1 : The current bus cycle has completed. Note : This bit is automatically cleared after a bus cycle is complete, and the APB bus cycle request bit is cleared.

Table 17: PHY macro diagnostic APB access control register

6.3 PHY register read through TAP

- As required, write PHY macro diagnostic control register with 0x3 to source APB clock from TAP clock.
- Write address of APB register to PHY macro diagnostic APB access address register.
- Write 0x2 to PHY macro diagnostic APB access control register.
- Read PHY macro diagnostic APB access control register. If [0] is set high, continue. Otherwise, read PHY macro diagnostic APB access control register again.
- Read PHY macro diagnostic APB access read data register, which contains the read data.

6.4 PHY register write through TAP

- As required, write PHY macro diagnostic control register with 0x3 to source APB clock from TAP clock.
- Write address of APB register to PHY macro diagnostic APB access address register.

- Write data to be written to PHY macro diagnostic APB access write data register.
- Write 0x6 to PHY macro diagnostic APB access control register.
- Read PHY macro diagnostic APB access control register. If [0] is set high, the write access is complete. Otherwise, read PHY macro diagnostic APB access control register again.

7 PHY Register Descriptions

Depending on the PHY configuration, some registers and register fields described below are removed and replaced with R/O registers/fields (with a return value of 0). The following convention indicates whether a register or field is present or not based on the configuration:

@ - indicates registers/fields that are present only for PHY configurations which include the PIPE interface.

& - indicates registers/fields that are present only for PHY configurations which include the Raw SerDes interface.

7.1 PHY and PCS Configuration and Control

This section describes the top level PHY and PCIe PCS configuration and control registers.

Register Name:			PIPE common control1 register
Register Address:			16'b11_0_0_0000_0000_0000
Register Mnemonic:			PHY_PIPE_CMN_CTRL1
Bits	**Type**	**Reset**	**Description**
15:13	R/O	3'd0	Reserved
12	RC	1'b0	**PHY APB access timeout**: When set, an APB read/write request to PHY registers failed (i.e. timed out). When set, this bit is cleared upon read.
11	R/O	1'b0	Reserved
10	R/W	1'b1	**PCIe PCS Comma realign**: This field controls the comma alignment state machine to re-align to new bit position without going to loss of sync state. The requirement of the new bit position should meet the number of COMMAs as per Symbol unlock count register definition. When new bit position is identified the comma alignment state machine remains in sync state with the alignment now locked to the new bit position. This field needs to be programmed during the PHY initialization routine before training sequences are received. The effect here is that pipe_rx_valid is not de-asserted upon re-alignment. When this bit is 0, pipe_rx_valid will be de-asserted upon loss of COMMA lock and subsequent re-alignment. Applies for PCIe Gen 1/2 and USB3.2 Gen 1 only. (@)
9	R/W	1'b0	**Block alignment clear on EIOS** : When set, upon receiving a PCIe EIOS, 128b/130b block alignment is reset regardless of Rx signal detect from the PMA (applies for PCIe Gen 3 only). (@)
8	R/W	1'b0	**Comma alignment clear on EIOS** : When set, upon receiving a PCIe EIOS, Comma Alignment is reset regardless of Rx signal detect from the PMA (applies for PCIe Gen 1/2 only). (@)
7	R/W	1'b0	**Block alignment ignore Rx SigDetect** : When set, 128b/13xb block alignment will not be reset due to loss of signal detection from the PMA (applies for PCIe Gen 3 and USB3.2 Gen 2 only). (@)
6	R/W	1'b0	**Comma alignment ignore Rx SigDetect** : When set, Comma alignment will not be reset due to loss of signal detection from the PMA (applies for PCIe Gen 1/2 and USB3.2 Gen 1 only). (@)
5:4	R/W	2'd0	**Rx signal detect delay** : Selects the number of clock cycles of delay to add to the PMA signal detect when the bit alignment blocks should be reset after losing signal. (@) • 2'b00 = 1 Rx data rate clock cycle • 2'b01 = 2 Rx data rate clock cycles • 2'b10 = 3 Rx data rate clock cycles • 2'b11 = 4 Rx data rate clock cycles
3:2	R/O	2'd0	Reserved
1	R/W	1'b0	**RefClk disable override**: 1 = overrides turning off reference clock receiver by forcing cmn_refclk_disable PMA input low. 0 = normal control of cmn_refclk_disable PMA input by PHY logic. (@)
0	R/W	1'b0	**PHY RefClk enable input ingnore** : 0 = ignore phy_en_refclk PHY input (forces low internally). 1 = phy_en_refclk_used as specified for controling enable/disable of cmn_refclk_<p/m>. (@)

Table 18: PIPE common control1 register

Register Name:			PIPE common control2 register (@)
Register Address:			16'b11_0_0_0000_0000_0001
Register Mnemonic:			PHY_PIPE_CMN_CTRL2
Bits	**Type**	**Reset**	**Description**
15:12	R/W	4'd11	**USB SuperSpeed Tx LFPS Stretch** : Minimum number of data rate clock cycles in which PMA tx_lfps_en signal is asserted for USB SuperSpeed rate. Number of data rate clock cycles must be > 1 PMA RefClk cycle.
11:8	R/W	4'd13	**USB SuperSpeedPlus Tx LFPS Stretch** : Minimum number of data rate clock cycles in which PMA tx_lfps_en signal is asserted for USB SuperSpeedPlus rate. Number of data rate clock cycles must be > 1 PMA RefClk cycle.
7	R/O	1'b0	Reserved
6	R/W	1'b1	**PCIe PCS TX electrical idle pre release**:When this bit is set, the TX electrical idle release to the PMA is advanced 1 cycle to allow the adjustment of the datapath timing
5	R/W	1'b0	**RX equaliser complete mask**: When this bit is cleared, the PHY will return direction change of 0 when PMA indicates evaluation complete. Subsequent evaluation requests would clear the PMA iteration counters. When set high, the PMA equalization complete signal is ignored.
4	R/W	1'b1	**PCIe PCS EIOS cycle error mask**: When this bit is enabled and the pipe rx interface is outputting an EIOS symbol, decode errors will be masked out
3	R/W	1'b0	**USB Gen 2 Bit Error Correction Disable**: When this bit is high, bit error correction on SKP and SDS symbols is disabled.
2	R/W	1'b0	**USB PIPE3 Compatibility Mode enable** : When this bit is set to 1, USB PIPE3 compatibility mode is enabled. In this mode, when operating in nominal empty Elasticity Buffer mode, when the EB buffer goes empty, instead of de-asserting PIPE RxDataValid, a USB SKIP OS is inserted into the data stream. This is the behavior as defined in PIPE version 3. When this bit is low, PIPE RxDataValid is de-asserted when the EB buffer goes empty, as recommended by PIPE version 4.
1	R/W	1'b0	**USB Loopback Slave Error Count disable**: When this bit is set to 1, disables the error count for US loopback slave, such that the error count is not inserted into the BCNT OS.
0	R/W	1'b1	**USB Elasticity Buffer Re-align enable**: When this bit is set to 1, when Rx for a USB link is initially started, the elasticity buffer is re-aligned to its idle point upon seeing 3 consecutive COMMAs (i.e. from TS1/TS2s) in the same relative bit position. The purpose of this is to re-align the elasticity buffer (i.e. CTC) after receiving the TSEQ data, which contains no SKIP OSs.

Table 19: PIPE common control2 register

Register Name:			PIPE comma lock configuration1 register (@)
Register Address:			16'b11_0_0_0000_0000_0010
Register Mnemonic:			PHY_PIPE_COM_LOCK_CFG1
Bits	**Type**	**Reset**	**Description**
15:12	R/W	4'h4	**PCIe PCS Comma unlock count:** The number of COMMA symbols that need to be seen in the wrong bit position before the comma alignment state machine will transition to RESYNC or LOS state
11:0	R/W	12'h400	**PCIe PCS Comma full lock count:** The number of COMMA symbols that need to be seen in the same bit position for the comma alignment state machine to lock. The field is used for initial reset lock.

Table 20: PIPE comma lock configuration1 register

Register Name:			PIPE comma lock configuration2 register (@)
Register Address:			16'b11_0_0_0000_0000_0011
Register Mnemonic:			PHY_PIPE_COM_LOCK_CFG2
Bits	**Type**	**Reset**	**Description**
15:8	R/W	8'h8	**PCIe PCS Comma lock count fast:** The number of COMMA symbols that needs to be seen in the same bit position for the comma state machine to lock. This field is used while the PCS is in P0 state after an EIOS has been seen, ie detecting FTS
7:0	R/W	8'h20	**PCIe PCS Comma lock count:** The number of COMMA symbols that needs to be seen in the same bit position for the comma state machine to lock. This field is used while the PCS is transitioning back to the P0 power state.

Table 21: PIPE comma lock configuration2 register

Register Name:			PIPE EIEOS lock configuration register (@)
Register Address:			16'b11_0_0_0000_0000_0100
Register Mnemonic:			PHY_PIPE_EIE_LOCK_CFG
Bits	**Type**	**Reset**	**Description**
15:12	R/W	4'h1	**EIE lock count fast:** The number of EIEOS blocks that need to be seen in the same bit postion for the alignment state machine to lock for Gen3/4. The field is used while the PCS is in P0 state after an EIEOS has been seen
11:8	R/W	4'h3	**EIE lock count :** The number of EIEOS blocks that need to be seen in the same bit postion for the alignment state machine to lock for Gen3/4. The field is used while the PCS is transitioning out of a power state change and not performing a rate change
7:0	R/W	8'h7F	**EIE full lock count:** The number of EIEOS blocks that need to be seen in the same bit postion for the alignment state machine to lock for Gen3/4. The field is used for initial after reset lock or lock after a rate change

Table 22: PIPE EIEOS lock configuration register

Register Name:			PIPE lane disable register (@)
Register Address:			16'b11_0_0_0000_0000_0101
Register Mnemonic:			PHY_PIPE_LANE_DSBL
Bits	**Type**	**Reset**	**Description**
15:8	R/O	8'd0	Reserved
7:0	R/W	8'd0	**PIPE lane disable:** Each bit corresponds to a lane (i.e. bit [0] -> lane 0, bit [1] -> lane 1, etc). When set the corresponding PIPE lane is disabled. Lanes that are disabled will transmit electrical idle and will not return any data on PIPE Rx interface. Used to disable unused lanes in a multi-lane PCIe link. (The PMA transceiver corresponding to lane will be placed in suspend.)

Table 23: PIPE lane disable register

Register Name:			PIPE receiver detect inhibit register (@)
Register Address:			16'b11_0_0_0000_0000_0110
Register Mnemonic:			PHY_PIPE_RCV_DET_INH
Bits	**Type**	**Reset**	**Description**
15:0	R/W	16'h3d09	**PCS Receiver Detect Inhibit Counter Load Value:** Counter load value to delay receiver detection request to PMA until PMA common mode is within the required range. The timer (running on divided reference clock from PMA) starts once the PMA common has completed startup. If receiver detect request is received while timer has not expired, the PCS will wait until the timer expires before signaling the request to the PMA. Load value is specified in multiples of 4x the divider reference clock period (typically 40 nsec for 100 MHz reference clock input frequency) for a 2.5 msec inhibit time.

Table 24: PIPE receiver detect inhibit register

Register Name:			PIPE Rx electrical idle L1.x exit delay register
Register Address:			16'b11_0_0_0000_0000_0111
Register Mnemonic:			PHY_PIPE_RX_ELEC_IDLE_DLY
Bits	**Type**	**Reset**	**Description**
15:10	R/W	6'd15	**PCIe PCS L1.x exit Rx electrical idle force fast count :** Counter load value to hold PIPE Rx Electrical Idle high upon exit from L1.x. Counter is loaded and starts counting down after phy_l*_rx_elec_idle_de-t_en is asserted high. Default is 500 nsec. This counter accounts for time to power on just the analog Rx signal detect block. Based on reference clock cycles (25 MHz default). Minimum value = 6'd0.
9:0	R/W	10'd150	**PCIe PCS L1.x exit Rx electrical idle force full count :** Counter load value to hold PIPE Rx Electrical Idle high upon exit from L1.x when the PMA common was powered down. Counter is loaded and starts counting down upon de-assertion of PMA cmn_ref_clk_disable (upon de-assertion of phy_l*_ent_l1_x for first link). Default is 6 usec. This counter accounts for time to power on the bias and decap and only takes effect if the PMA was suspended. Based on reference clock cycles (25 MHz default). Minimum value = 10'd1.

Table 25: PIPE RX electrical idle L1.x exit delay register

Register Name:			PHY PLL configuration register
Register Address:			16'b11_0_0_0000_0000_1110
Register Mnemonic:			PHY_PLL_CFG
Bits	**Type**	**Reset**	**Description**
15:2	R/O	14'd0	Reserved
1	R/W	1'b0	**PLL configuration:** 0 = PHY configured to only use PLL0 / PLL1 disabled. 1 = PHY configured to use both PLL0 and PLL1.
0	R/W	1'b1	**Single link PCIe configuration :** 1 = PHY configured such that there is only a single PCIe link (1xN) and all PCIe rates will be driven by PLL0. Any other links are not PCIe and will not use PLL0. 0 = ALl other configurations. This is a static configuration, which can only be changed while phy_reset_n is asserted low.

Table 26: PHY PLL configuration register

Register Name:			PHY state change monitor timeout
Register Address:			16'b11_0_0_0000_0000_1010
Register Mnemonic:			PHY_STATE_CHG_TIMEOUT
Bits	**Type**	**Reset**	**Description**
15:0	R/W	16'h30D4	**State change timeout:** Bits [19:4] of the state change timeout (bits [3:0] are zero). The timeout is the maximum number of APB clock cycles (abp_pclk) that are allowed for completion of a PHY power state change for the link. If the timeout expires, phy_interrupt_ln_<> for the associated lane is asserted and interrupt status register bit is set. For maximum allowed APB clock frequency, this provides 5.2 msec max-imum timeout. Default is set for 1 msec for the maximum APB clock frequency.

Table 27: PHY state change monitor timeout

Register Name:			PHY speedup control register
Register Address:			16'b11_0_0_0000_0000_1111
Register Mnemonic:			PHY_AUTO_CFG_SPDUP
Bits	**Type**	**Reset**	**Description**
15:4	R/O	12'd0	Reserved
3	R/O	1'b0	**Speedup configuration complete:** 1 = PHY speedup configuration is complete, 0 = not complete.
2	R/W	1'b0	**Speedup configuration stall:** 1 = upon completion of PHY speedup configuration, do not release reset to PMA until this bit is cleared, 0 = release reset to PMA upon completion of PHY speedup configuration. Do not set high when [1] = 0.
1	R/W	1'b0	**Speedup configuration enable:** If set to 1 upon de-assertion (high) of phy_reset_n, the PHY will be configured for simulation speedup. Only for use in RTL or gate-level simulations. Not for use in silicon.
0	R/O	1'b0	Reserved

Table 28: PHY speedup control register

Register Name:			PHY external reference clock detect low threshold register
Register Address:			16'b11_0_0_0000_0001_0000
Register Mnemonic:			PHY_REFCLK_DET_THRES_LOW
Bits	**Type**	**Reset**	**Description**
15:0	R/W	16'd450	**External Reference Clock Active Detect Low Threshold:** This is the minimum number of external reference clock cycles which must be counted during the measurement interval to indicate a valid clock detected. The default value is based on 100MHz reference clock external frequency and 200 MHz (max) apb_pclk frequency.

Table 29: PHY External Reference Clock Detect Low Threshold register

Register Name:			PHY external reference clock detect high threshold register
Register Address:			16'b11_0_0_0000_0001_0001
Register Mnemonic:			PHY_REFCLK_DET_THRES_HIGH
Bits	**Type**	**Reset**	**Description**
15:0	R/W	16'd10050	**External Reference Clock Active Detect High Threshold:** This is the maximum number of external reference clock cycles which must be counted during the measurement interval to indicate a valid clock detected. The default value is based on 100MHz reference clock frequency and 10 MHZ apb_pclk frequency.

Table 30: PHY External Reference Clock Detect High Threshold register

Register Name:			PHY external reference clock detect measurement interval register
Register Address:			16'b11_0_0_0000_0001_0010
Register Mnemonic:			PHY_REFCLK_DET_INTERVAL
Bits	**Type**	**Reset**	**Description**
15:0	R/W	16'd1000	**External Reference Clock Active Detect Measurement Interval:** This is the number of apb_pclk cycles in which to count external reference clock cycles. The default corresponds to 5 us for 200 MHz apb_clk and 100 us for 10 MHz apb_clock.

Table 31: PHY External Reference Clock Detect Measurement Interval register

Register Name:			PHY external reference clock detect delay register
Register Address:			16'b11_0_0_0000_0001_0011
Register Mnemonic:			PHY_REFCLK_DET_OP_DELAY
Bits	**Type**	**Reset**	**Description**
15:8	R/W	8'd16	**External Reference Clock Active Detect End Delay:** This is the number of apb_pclk cycles to wait upon completion of measurement interval before capturing the result (accounts for synchronization delays).
7:0	R/W	8'd100	**External Reference Clock Active Detect Start Delay:** This is the number of apb_pclk cycles to wait prior to start of measurement interval (accounts for enable delay of reference clock in PMA).

Table 32: PHY External Reference Clock Detect Delay register

Register Name:			PHY external reference clock detect isolation control register
Register Address:			16'b11_0_0_0000_0001_0100
Register Mnemonic:			PHY_REFCLK_DET_ISO_CTRL
Bits	**Type**	**Reset**	**Description**
15:13	R/O	3'd0	Reserved
12	R/O	1'b0	Captures the current value of the pma_cmn_ext_refclk_detected_cfg PHY input.
11:10	R/O	2'd0	Reserved
9	R/O	1'b0	Current value of pma_cmn_ext_refclk_detected PHY output.
8	R/O	1'b0	Current value of pma_cmn_ext_refclk_detected_valid PHY output.
7:1	R/O	7'd0	Reserved
0	W/O	1'b0	**External Reference Clock Active Detect Start:** Write with 1 to initiate an external reference clock active detect operation. Any previous operation must have completed prior to writing with 1.

Table 33: PHY External Reference Clock Detect Isolation Control register

Register Name:			PHY interrupt status register
Register Address:			16'b11_0_1_0nnn_0001_0010
Register Mnemonic:			PHY_INTERRUPT_STS
Bits	**Type**	**Reset**	**Description**
15	R/W	1'b0	**State change monitor enable** - 1 = state change monitor enabled, 0 = state change monitor disabled. Note: Only the master lane's state change monitor for a link is enabled. The state change monitor for a slave lane is disabled regardless of the state of this bit.
14:11	R/O	4'd0	Reserved
10:8	R/O	3'd0	**Next power state/data rate** - Only valid when one of the interrupt status bits is set. Indicates the requested power state or data rate for the state change failure. For PIPE requests, loaded based on the following: • For a data rate change - {1'b0, requested pipe_rate[1:0]}. • For a power state change using PIPE powerdown - requested pipe_powerdown[2:0] • For sideband L1.x entry - 3'b100. • For sideband L1.x exit - 3'b010. For Raw SerDes power state change requests, loaded based on following: • 3'b000 = power state change with A0 as requested power state • 3'b001 = power state change with A1 as requested power state • 3'b010 = power state change with A2 as requested power state • 3'b011 = power state change with A3 as requested power state • 3'b100 = power state change with A4 as requested power state • 3'b101 = power state change with A5 as requested power state • 3'b110 = PLL clock enable asserted • 3'b111 = PLL clock enable de-asserted
7	R/O	1'b0	Reserved
6:4	R/O	3'd0	**Current power state/data rate** - Only valid when one of the interrupt status bits is set. Indicates the starting power state or data rate for the state change failure. For PIPE requests, loaded based on the following: • For a data rate change - {1'b0, starting pipe_rate[1:0]}. • For a power state change using PIPE powerdown - starting pipe_powerdown[2:0] • For sideband L1.x entry - 3'b010. • For sideband L1.x exit - 3'b100. For Raw SerDes power state change requests, loaded based on following: • 3'b000 = power state change with A0 as starting power state • 3'b001 = power state change with A1 as starting power state • 3'b010 = power state change with A2 as starting power state • 3'b011 = power state change with A3 as starting power state • 3'b100 = power state change with A4 as starting power state • 3'b101 = power state change with A5 as starting power state • 3'b110 = PLL clock enable asserted • 3'b111 = PLL clock enable de-asserted
3:2	R/O	2'd0	Reserved
1	WRC	1'b0	**Data rate state change interrupt status** - Set to 1 upon data rate change timeout. Cleared upon read. Bit is writeable to allow the interrupt to be set manually for test purposes.Only set high by data rate change timeout if bit[0] == 0.
0	WRC	1'b0	**Power state change interrupt status** - Set to 1 upon power state change timeout. Cleared upon read. Bit is writeable to allow the interrupt to set manually for test purposes. Only set high by power state change timeout if bit[1] == 0.

Table 34: PHY interrupt status register

Register Name:			PHY USB3 Gen 2 pre-shoot configuration 0 register (@)
Register Address:			16'b11_0_0_0000_0010_0000
Register Mnemonic:			PHY_PIPE_USB3_GEN2_PRE_CFG0
Bits	**Type**	**Reset**	**Description**
15:8	R/W	8'h0a	**USB3 Gen 2 transmit pre-shoot multiplier configuration 1:** For a lane configured for USB3 mode at Gen 3 data rate, sets the multiplier configuration for the Tx de-emphasis pre-shoot (C_{-1}) when pipe_l<>_tx-_deemphasis[1:0] == 0b01 for the associated lane. Default: 5/64.
7:0	R/W	8'h0a	**USB3 Gen 2 transmit pre-shoot multiplier configuration 0:** For a lane configured for USB3 mode at Gen 3 data rate, sets the multiplier configuration for the Tx de-emphasis pre-shoot (C_{-1}) when pipe_l<>_tx-_deemphasis[1:0] == 0b00 for the associated lane. The multiplier is set based on: • Bit 7 = Enable multiply by 1.0 • Bit 6 = Enable multiply by 0.5 (1/2) • Bit 5 = Enable multiply by 0.25 (1/4) • Bit 4 = Enable multiply by 0.125 (1/8) • Bit 3 = Enable multiply by 0.0625 (1/16) • Bit 2 = Enable multiply by 0.03125 (1/32) • Bit 1 = Enable multiply by 0.015625 (1/64) • Bit 0 = Enable multiply by 0...78125 (1/128) Default: 5/64.

Table 35: PHY USB3 Gen 2 pre-shoot configuration 0 register

Register Name:			PHY USB3 Gen 2 pre-shoot configuration 1 register (@)
Register Address:			16'b11_0_0_0000_0010_0001
Register Mnemonic:			PHY_PIPE_USB3_GEN2_PRE_CFG1
Bits	**Type**	**Reset**	**Description**
15:8	R/W	8'h00	**USB3 Gen 2 transmit pre-shoot multiplier configuration 3:** For a lane configured for USB3 mode at Gen 3 data rate, sets the multiplier configuration for the Tx de-emphasis pre-shoot (C_{-1}) when pipe_l<>_tx-_deemphasis[1:0] == 0b11 for the associated lane. Default: 0.
7:0	R/W	8'h00	**USB3 Gen 2 transmit pre-shoot multiplier configuration 2:** For a lane configured for USB3 mode at Gen 3 data rate, sets the multiplier configuration for the Tx de-emphasis pre-shoot (C_1) when pipe_l<>_tx-_deemphasis[1:0] == 0b10 for the associated lane. Default: 0.

Table 36: PHY USB3 Gen 2 pre-shoot configuration 1 register

Register Name:			PHY USB3 Gen 2 de-emphasis configuration 0 register (@)
Register Address:			16'b11_0_0_0000_0010_0010
Register Mnemonic:			PHY_PIPE_USB3_GEN2_POST_CFG0
Bits	**Type**	**Reset**	**Description**
15:8	R/W	8'h10	**USB3 Gen 2 transmit pre-shoot multiplier configuration 1:** For a lane configured for USB3 mode at Gen 3 data rate, sets the multiplier configuration for the Tx de-emphasis (C_1) when pipe_l<>_tx_deempha-sis[1:0] == 0b01 for the associated lane. Default: 1/8.
7:0	R/W	8'h00	**USB3 Gen 2 transmit pre-shoot multiplier configuration 0:** For a lane configured for USB3 mode at Gen 3 data rate, sets the multiplier configuration for the Tx de-emphasis (C_1) when pipe_l<>_tx_deempha-sis[1:0] == 0b00 for the associated lane. Default: 0.

Table 37: PHY USB3 Gen 2 de-emphasis configuration 0 register

Register Name:			PHY USB3 Gen 2 de-emphasis configuration 1 register (@)
Register Address:			16'b11_0_0_0000_0010_0011
Register Mnemonic:			PHY_PIPE_USB3_GEN2_POST_CFG1
Bits	**Type**	**Reset**	**Description**
15:8	R/W	8'h00	**USB3 Gen 2 transmit pre-shoot multiplier configuration 3:** For a lane configured for USB3 mode at Gen 3 data rate, sets the multiplier configuration for the Tx de-emphasis (C_1) when pipe_l<>_tx_deemphasis[1:0] == 0b11 for the associated lane. Default: 0.
7:0	R/W	8'h10	**USB3 Gen 2 transmit pre-shoot multiplier configuration 2:** For a lane configured for USB3 mode at Gen 3 data rate, sets the multiplier configuration for the Tx de-emphasis (C_1) when pipe_l<>_tx_deemphasis[1:0] == 0b10 for the associated lane. Default: 1/8.

Table 38: PHY USB3 Gen 2 de-emphasis configuration 1 register

7.2 PMA Configuration and Control

This section describes PMA configuration and control registers.

Register Name:			PMA common control1 register
Register Address:			16'b11_1_0_0000_0000_0000
Register Mnemonic:			PHY_PMA_CMN_CTRL1
Bits	**Type**	**Reset**	**Description**
15:7	R/O	9'b0	Reserved
6	R/W	1'b0	Drives cmn_refclk_rcv_out_en PMA input
5	R/O	1'b0	Current value of cmn_macro_suspend_ack PMA output
4	R/O	1'b0	Current value of cmn_refclk_active PMA output
3:1	R/O	3'd0	Reserved
0	R/O	1'b0	Current value of cmn_ready pin PMA output

Table 39: PMA common control1 register

Register Name:			PMA common control2 register
Register Address:			16'b11_1_0_0000_0000_0001
Register Mnemonic:			PHY_PMA_CMN_CTRL2
Bits	**Type**	**Reset**	**Description**
15:8	R/O	8'd0	Reserved
7	R/O	1'b0	Current value of cmn_pll1_locked PMA output
6	R/O	1'b0	Current value of cmn_pll0_locked PMA output
5	R/O	1'b0	Current value of cmn_pll1_clk_en_ack PMA output
4	R/O	1'b0	Current value of cmn_pll0_clk_en_ack PMA output
3	R/O	1'b1	Current value of cmn_pll1_disabled PMA output
2	R/O	1'b1	Current value of cmn_pll0_disabled PMA output
1	R/O	1'b0	Current value of cmn_pll1_ready PMA output
0	R/O	1'b0	Current value of cmn_pll0_ready PMA output

Table 40: PMA common control2 register

Register Name:			PMA SSM current state register
Register Address:			16'b11_1_0_0000_0000_0010
Register Mnemonic:			PHY_PMA_SSM_STATE
Bits	**Type**	**Reset**	**Description**
15:9	R/O	7'd0	Reserved
8:0	R/O	9'h000	**PMA SSM** : Current state of the PMA startup state machine. PMA output (Not re-synchronized to apb_p-clk)

Table 41: PMA SSM current state register

Register Name:			PMA PLL Raw SerDes control register
Register Address:			16'b11_1_0_0000_0000_0011
Register Mnemonic:			PHY_PMA_PLL_RAW_CTRL
Bits	**Type**	**Reset**	**Description**
15:2	R/O	14'd0	Reserved
1	R/W	1'b1	**Raw SerDes PLL1 control** : When set to 1, cmn_pll1_en PMA input is controlled by PHY logic. When set to 0, cmn_pll1_en PMA input is forced low. When PLL1 is driving lanes configured for Raw SerDes operation, this bit allows 'manual' enable/disable of PLL1 to allow reconfiguration of the PLL for a different data rate. The PHY logic drives cmn_pll1_en high unless the PHY is configured to operation on PLL0 only (PHY_PLL_CFG[1] == 0).
0	R/W	1'b1	**Raw SerDes PLL0 control** : When set to 1, cmn_pll0_en PMA input is controlled by PHY logic. When set to 0, cmn_pll0_en PMA input is forced low. When PLL0 is driving lanes configured for Raw SerDes operation, this bit allows 'manual' enable/disable of PLL0 to allow reconfiguration of the PLL for a different data rate. The PHY logic drives cmn_pll0_en high except when the PHY is configured for single link PCIe mode and is performing a rate change between PCIe Gen 1/2 and PCIe Gen 3 (PHY_PLL_CFG[0] == 1). However, PCIe is only supported for PIPE mode and not applicable when PLL0 is driving lanes configured for Raw SerDes operation.

Table 42: PMA PLL Raw SerDes control register

Register Name:			PMA PLL0 State Machine current state register
Register Address:			16'b11_1_0_0000_0000_1011
Register Mnemonic:			PHY_PMA_PLL0_SM_STATE
Bits	**Type**	**Reset**	**Description**
15:12	R/O	4'd0	Reserved
11:0	R/O	12'h300	Current value of cmn_pllsm0_state[11:0]. PMA output (Debug only: Not re-synchronized)

Table 43: PMA PLL0 State Machine current state register

Register Name:			PMA PLL1 State Machine current state register
Register Address:			16'b11_1_0_0000_0000_1100
Register Mnemonic:			PHY_PMA_PLL1_SM_STATE
Bits	**Type**	**Reset**	**Description**
15:12	R/O	4'd0	Reserved
11:0	R/O	12'h300	Current value of cmn_pllsm1_state[11:0]. PMA output (Debug only: Not re-synchronized)

Table 44: PMA PLL1 State Machine current state reg

Register Name:			PMA transceiver control register
Register Address:			16'b11_1_1_0nnn_0000_0000
Register Mnemonic:			PHY_PMA_XCVR_CTRL
Bits	**Type**	**Reset**	**Description**
15:9	R/O	7'd0	Reserved
8	R/W	1'b0	Drives the tx_differential_invert PMA input for the associated lane.
7:5	R/O	3'h0	Reserved
4	R/O	1'b0	Current value of rx_cdrlf_fphl_locked PMA output for the associated lane.
3	R/O	1'b0	Current value of rx_bist_status PMA output for the associated lane.
2	R/O	1'b0	Current value of rx_bist_err_toggle PMA output for the associated lane.
1	R/O	1'b0	Current value of rx_bist_sync PMA output for the associated lane.
0	R/W	1'b0	Drives the rx_differential_invert PMA input for the associated lane.

Table 45: PMA transceiver control register

Register Name:			PMA loopback control register
Register Address:			16'b11_1_1_0nnn_0000_0001
Register Mnemonic:			PHY_PMA_XCVR_LPBK
Bits	**Type**	**Reset**	**Description**
15:9	R/O	7'd0	Reserved
8	R/W	1'b0	Drives the tx_bist_hold PMA input for all lanes in the associated link (i.e. the bit associated with the master lane of the link drives all lanes in the link). Synchronized to transmit data rate clock.
7:6	R/O	2'd0	Reserved
5	R/W	1'b0	Drives the xcvr_lpbk_fe_parallel_en PMA input for the associated lane.
4	R/W	1'b0	Drives the xcvr_lpbk_ne_parallel_en PMA input for the associated lane.
3	R/W	1'b0	Drives the xcvr_lpbk_recovered_clk_en PMA input for the associated lane.
2	R/W	1'b0	Drives the xcvr_lpbk_line_en PMA input for the associated lane.
1	R/W	1'b0	Drives the xcvr_lpbk_isi_gen_en PMA input for the associated lane.
0	R/W	1'b0	Drives the xcvr_lpbk_serial_en PMA input for the associated lane.

Table 46: PMA loopback control register

Register Name:			PMA PI position register
Register Address:			16'b11_1_1_0nnn_0000_0010
Register Mnemonic:			PHY_PMA_PI_POS
Bits	**Type**	**Reset**	**Description**
15:8	R/O	8'h00	Current value of rx_pi_val PMA output for the associated lane.
7:0	R/O	8'h00	Current value of rx_eye_plot_pi_val PMA output for the associated lane.

Table 47: PMA PI position register

Register Name:			PMA PSM current state lower register
Register Address:			16'b11_1_1_0nnn_0001_0000
Register Mnemonic:			PHY_PMA_PSM_STATE_LO
Bits	**Type**	**Reset**	**Description**
15:0	R/O	16'h0000	Current value of xcvr_psm_state[15:0] for the associated lane - PMA power state machine state. (Not re-synchronized to apb_pclk)

Table 48: PMA Transceiver PSM current state low register

Register Name:			PMA PSM current state higher register
Register Address:			16'b11_1_1_0nnn_0001_0001
Register Mnemonic:			PHY_PMA_PSM_STATE_HI
Bits	**Type**	**Reset**	**Description**
15:13	R/O	3'd0	Reserved
12	R/O	1'b0	Current value of xcvr_psm_ready for the associated lane.
11:10	R/O	2'd0	Reserved
9:0	R/O	10'd0	Current value of xcvr_psm_state[25:16] for the associated lane - PMA power state machine state. (Not re-synchronized to apb_pclk)

Table 49: PMA Transceiver PSM current state high register

7.3 PHY and PMA Isolation

Isolation mode is a mode that allows all of the macro control input pins and some internal signals to be driven directly by internal CDB register bits, in the event for instance, that components outside of the PHY macro are not functioning correctly. In addition to controlling the input signals, this mode also allows for selected output pins to be monitored using CDB registers as well. This allows for a significant amount of the macro to be independently verified.

There are two isolation modes supported in this macro. These are :

- Full PHY macro isolation mode, where PHY top level macro control inputs and outputs can be controlled and observed.
- PMA only isolation mode, where PMA specific inputs and outputs can be controlled and observed, such that the PMA can be controlled independently from the PCS.

Isolation mode is controlled by the isolation_en in the on page 67. When isolation_en is set, the isolation_mode_sel bit in the on page 67 selects the type of isolation. When isolation_mode_sel is low, PHY Macro isolation mode is selected. When isolation_mode_sel is high, PMA Isolation Mode is selected. The registers defined in this section control the specified signals when in PHY and PMA isolation modes. In the description of each register, one will find a note indicating in which isolation mode(s) the register can be used.

7.3.1 PHY isolation

Register Name:			PHY common control signal isolation register (@)
Register Address:			16'b11_0_0_0000_0000_1000
Register Mnemonic:			PHY_ISO_CMN_CTRL
Bits	**Type**	**Reset**	**Description**
15:13	R/O	3'd0	Reserved
12	R/O	1'b0	Current value of phy_refclk_reqd PHY output.
11:9	R/O	3'd0	Reserved
8	R/W	1'b0	Drives phy_en_refclk PHY input when in PHY macro and PMA isolation mode.
7:6	R/O	2'd0	Reserved
5	R/W	1'b0	Drives phy_pma_suspend_override PHY input when in PHY macro and PMA isolation mode.
4	R/W	1'b0	Drives refclk_rcvr_pwrdn internal PHY signal when in PHY macro and PMA isolation mode (1 = powers down the reference clock receiver). During normal operation, refclk_rcvr_pwrdn is driven from ~abp_preset_n, which powers down the reference clock receiver when the PHY is disabled.
3:1	R/O	3'd0	Reserved
0	R/W	1'b1	Drives phy_reset_n PHY input when in PHY macro and PMA isolation mode.

Table 50: PHY common control isolation register

Register Name:			PIPE TX control signal isolation register (@)
Register Address:			16'b11_0_1_0nnn_0000_0000
Register Mnemonic:			PHY_PIPE_ISO_TX_CTRL
Bits	**Type**	**Reset**	**Description**
15:12	R/W	4'h0	Drives pipe_tx_data_k PHY input for the associated lane when in PHY macro and PMA isolation modes.
11:9	R/O	3'd0	Reserved
8	R/W	1'b0	Drives pipe_tx_ones_zeros input for the associated lane when in PHY macro and PMA isolation modes.
7:5	R/O	3'd0	Reserved
4	R/W	1'b0	Drives pipe_tx_elec_idle PHY input for the associated lane when in PHY macro and PMA isolation modes
3	R/W	1'b0	Drives pipe_tx_128b_enc_byp PHY input for the associated lane when in PHY macro and PMA isolation modes.
2	R/W	1'b0	Drives pipe_tx_compliance PHY input for the associated lane when in PHY macro and PMA isolation modes.
1:0	R/W	2'd0	Drives pipe_tx_pattern PHY input for the associated lane when in PHY macro and PMA isolation modes.

Table 51: PIPE TX control signal isolation register

Register Name:			PIPE TX local preset coefficients low isolation register (@)
Register Address:			16'b11_0_1_0nnn_0000_0001
Register Mnemonic:			PHY_PIPE_ISO_TX_LPC_LO
Bits	**Type**	**Reset**	**Description**
15:14	R/O	2'b00	Reserved
13:8	R/O	6'h00	Current value of pipe_tx_local_tx_preset_coefficients[11:6] for the associated lane when PHY_PCS_ISO_TX_LPC_HI[15] == 1. Otherwise, 0.
7:6	R/O	2'b00	Reserved
5:0	R/O	6'h00	Current value of pipe_tx_local_tx_preset_coefficients[5:0] for the associated lane when PHY_PCS_ISO_TX_LPC_HI[15] == 1. Otherwise, 0.

Table 52: PIPE Tx local preset coefficients low isolation register

Register Name:			PIPE TX local preset coefficients high isolation register (@)
Register Address:			16'b11_0_1_0nnn_0000_0010
Register Mnemonic:			PHY_PIPE_ISO_TX_LPC_HI
Bits	**Type**	**Reset**	**Description**
15	R/O	1'b0	Set upon assertion of pipe_tx_local_tx_coeff_vld PHY output for the associated lane. Cleared upon writing PHY_PCS_ISO_TX_LPC_HI[12] with a 0.
14:13	R/O	2'b00	Reserved
12	R/W	1'b0	Drives pipe_tx_get_local_preset_coef PHY output for the associated lane when in PHY macro and PMA isolation modes
11:8	R/W	4'b0000	Drives pipe_tx_local_preset_index PHY output for the associated lane when in PHY macro and PMA isolation modes.
7:6	R/O	2'b00	Reserved
5:0	R/O	6'h00	Current value of pipe_tx_local_tx_preset_coefficients[17:12] for the associated lane when PHY_PCS_ISO_TX_LPC_HI[15] == 1. Otherwise, 0.

Table 53: PIPE Tx local preset coefficients high isolation register

Register Name:			PCS TX PIPE deemphasis low isolation register (@)
Register Address:			16'b11_0_1_0nnn_0000_0011
Register Mnemonic:			PHY_PCS_ISO_TX_DMPH_LO
Bits	**Type**	**Reset**	**Description**
15:14	R/O	2'd0	Reserved
13:8	R/W	6'h00	Drives pipe_tx_deemph[11:6] PHY input for the associated lane when in PHY macro and PMA isolation mode.
7:6	R/O	2'h0	Reserved
5:0	R/W	6'h00	Drives pipe_tx_deemph[5:0] PHY input for the associated lane when in PHY macro and PMA isolation mode.

Table 54: PIPE TX Deemphasis low isolation register

Register Name:			PIPE TX deemphasis high isolation register (@)
Register Address:			16'b11_0_1_0nnn_0000_0100
Register Mnemonic:			PHY_PIPE_ISO_TX_DMPH_HI
Bits	**Type**	**Reset**	**Description**
15:6	R/O	10'h000	Reserved
5:0	R/W	6'h0	Drives pipe_tx_deemph[17:12] PHY input for the associated lane when in PHY macro and PMA isolation modes.

Table 55: PIPE Tx Deemphasis high isolation register

Register Name:			PIPE TX local FS and LF isolation register (@)
Register Address:			16'b11_0_1_0nnn_0000_0101
Register Mnemonic:			PHY_PIPE_ISO_TX_FSLF
Bits	**Type**	**Reset**	**Description**
15:14	R/O	2'b00	Reserved
13:8	R/O	6'h00	Current value of pipe_tx_local_fs PHY output for the associated lane. (Not re-synchronized to apb_pclk)
7:6	R/O	2'b00	Reserved
5:0	R/O	6'h00	Current value of pipe_tx_local_lf PHY output for the associated lane. (Not re-synchronized to apb_pclk)

Table 56: PIPE Tx local FS/LF isolation register

Register Name:			PCS TX PIPE data low isolation register (@)
Register Address:			16'b11_0_1_0nnn_0000_0110
Register Mnemonic:			PHY_PCS_ISO_TX_DATA_LO
Bits	**Type**	**Reset**	**Description**
15:0	R/W	16'h0000	Drives pipe_tx_data[15:0] PHY input for the associated lane when in PHY macro and PMA isolation mode.

Table 57: PCS PIPE TX Data low isolation register

Register Name:			PCS TX PIPE data high isolation register (@)
Register Address:			16'b11_0_1_0nnn_0000_0111
Register Mnemonic:			PHY_PCS_ISO_TX_DATA_HI
Bits	**Type**	**Reset**	**Description**
15:0	R/W	16'h0000	Drives pipe_tx_data[31:16] PHY input for the associated lane when in PHY macro and PMA isolation mode.

Table 58: PCS PIPE TX Data high isolation register

Register Name:			PCS RX control signal isolation register (@)
Register Address:			16'b11_0_1_0nnn_0000_1000
Register Mnemonic:			PHY_PCS_ISO_RX_CTRL
Bits	**Type**	**Reset**	**Description**
15:12	R/O	4'h0	Current value of pipe_rx_data_k PHY output for the associated lane, when PHY_PCS_ISO_RX_CTRL[5] == 1. Otherwise, 0. (Not re-synchronized to apb_pclk)
11:10	R/O	d'h0	Reserved
9	R/W	1'b0	Drives pipe_rx_eq_training PHY input for the associated lane when in PHY macro and PMA isolation modes.
8	R/W	1'b0	Drives pipe_rx_termination PHY input for the associated lane when in PHY macro and PMA isolation modes.
7	R/W	1'b0	Drives pipe_rx_polarity PHY input for the associated lane when in PHY macro and PMA isolation modes.
6	R/O	1'b0	Reserved
5	R/O	1'b0	Current value of pipe_rx_valid PHY output for the associated lane.
4	R/O	1'b1	Current value of pipe_rx_elec_idle PHY output for the associated lane.
3	R/O	1'b0	Current value of pipe_align_detect PHY output for the associated lane.
2:0	R/O	3'b000	Current value of pipe_rx_status PHY output for the associated lane. Holds the highest priority pipe_rx-_status value seen, since the last register read. Cleared upon read.

Table 59: PCS PIPE RX control signal isolation register

Register Name:			PIPE RX equalization evaluation isolation register (@)
Register Address:			16'b11_0_1_0nnn_0000_1001
Register Mnemonic:			PHY_PIPE_ISO_RX_EQ_EVAL
Bits	**Type**	**Reset**	**Description**
15:13	R/O	3'h0	Reserved
12	R/W	1'b0	Drives pipe_invalid_request for the associated lane when in PHY macro and PMA isolation modes.
11	R/W	1'b0	pipe_link_eval_dir_change[5:4] bit reversal enable. When low, no bit reversal. When high, the bit positions for pipe_link_eval_dir_change[5:4] PHY output for the associated lane are reversed.
10	R/W	1'b0	pipe_link_eval_dir_change[3:2] bit reversal enable. When low, no bit reversal. When high, the bit positions for pipe_link_eval_dir_change[3:2] PHY output for the associated lane are reversed.
9	R/W	1'b0	pipe_link_eval_dir_change[1:0] bit reversal enable. When low, no bit reversal. When high, the bit positions for pipe_link_eval_dir_change[1:0] PHY output for the associated lane are reversed.]
8	R/W	1'b0	Drives pipe_rx_eval PHY input for the associated lane when in PHY macro and PMA isolation modes.
7	R/O	1'b0	Reserved
6	R/O	1'b1	Captures pipe_phy_status for Rx equalization evaluation PHY output for the associated lane (does not include power state change signaling). Set when pipe_phy_status is high and pipe_rx_eq_eval to the PCS is high (i.e. after the isolation MUX). Cleared upon read.
5:0	R/O	6'h00	pipe_link_eval_dir_change PHY output for the associated lane (prior to bit reversal logic) upon completion of Rx equalization evaluation. Captured upon assertion of Rx equalization eval pipe_phy_status when pipe_rx_eq_eval to the PCS (i.e. after the isolation MUX) is high. Cleared upon read. (Not re-synchronized to apb_pclk)

Table 60: PIPE Rx equalization evaluation isolation register

Register Name:			PHY link configuration isolation register
Register Address:			16'b11_0_1_0nnn_0000_1010
Register Mnemonic:			PHY_ISO_LINK_CFG
Bits	**Type**	**Reset**	**Description**
15	R/W	1'b0	Drives phy_link_cfg_ln_{nnnn} PHY input when in PHY macro and PMA isolation modes.
14:13	R/O	2'h0	Reserved
12	R/W	1'b0	Drives pipe_l{nnnn}_32bit_sel PHY input when in PHY macro and PMA isolation modes.
11:10	R/O	2'd0	Reserved
9:8	R/W	2'd0	Drives pma_fullrt_div_ln_{nnnn} PHY input when in PHY macro and PMA isolation modes.
7:6	R/O	2'd0	Reserved
5	R/W	1'b0	Drives pipe_l{nnnn}_pcie_l1_ss_sel PHY input when in PHY macro and PMA isolation mode.
4	R/W	1'd0	Drives pipe_l{nnnn}_eb_mode PHY input when in PHY macro and PMA isolation modes.
3:2	R/O	2'd0	Reserved
1:0	R/W	2'h0	Drives phy_l{nnnn}_mode PHY input when in PHY macro and PMA isolation modes.

Table 61: PHY link configuration isolation register

Register Name:			PCS Link control isolation register
Register Address:			16'b11_0_1_0nnn_0000_1011
Register Mnemonic:			PHY_PCS_ISO_LINK_CTRL
Bits	**Type**	**Reset**	**Description**
15:14	R/O	4'h0	Reserved
13	R/O	1'b0	Current value of phy_l*_ack_l1_x PHY output for the associated lane. (@)
12	R/W	1'b0	Drives the phy_l*_ent_l1_x PHY input for the associated lane when in PHY macro and PMA isolation modes. (Link signal - for multi-lane links, master lane used for all lanes in link.)
11	R/W	1'b0	Drives the phy_l*_rx_elec_idle_det_en PHY input for the associated lane when in PHY macro and PMA isolation modes. (Link signal - for multi-lane links, master lane used for all lanes in link.)
10	R/W	1'b0	Drives the phy_l*_tx_cmn_mode_en PHY input for the associated lane when in PHY macro and PMA isolation modes. (Link signal - for multi-lane links, master lane used for all lanes in link.)
9:8	R/W	2'b00	Drives the pipe_l*_rate PHY input for the associated lane when in PHY macro and PMA isolation modes. (Link signal - for multi-lane links, master lane used for all lanes in link.)
7	R/O	1'b0	Reserved
6:4	R/W	3'b010	Drives the pipe_l*_powerdown PHY input for the associated lane when in PHY macro and PMA isolation modes. (Link signal - for multi-lane links, master lane used for all lanes in link.)
3	R/O	1'b0	Reserved
2	R/W	1'b0	Drives the pipe_l*_tx_det_rx_lpbk PHY input for the associated lane when in PHY macro and PMA isolation modes. (Link/lane signal - for non-USB multi-lane links, master lane used for all lanes in link. For USB multi-lane links, used only for the associated lane).
1	R/O	1'b1	Captures pipe_l*_phy_status (for power state and rate change) PHY output for the associated lane. Set when pipe_phy_status is high and cleared upon read if pipe_phy_status is low. (@)
0	R/W	1'b1	Drives the phy_l*_reset_n PHY input for the associated lane when in PHY macro and PMA isolation modes. (Link signal - for multi-lane links, master lane used for all lanes in link.)

Table 62: PCS PIPE Link control isolation register

Register Name:			PIPE USB Gen 1 loopback slave BER count register (@)
Register Address:			16'b11_0_1_0nnn_0000_1100
Register Mnemonic:			PHY_PIPE_ISO_USB_BER_CNT
Bits	**Type**	**Reset**	**Description**
15:8	R/O	8'd0	Reerved
7:0	R/O	8'd0	Current value of USB 3.1 Gen 1 loopback slave Bit Error Count from the PCS.

Table 63: PIPE USB loopback slave BER count register

Register Name:			PCS RX data low isolation register (@)
Register Address:			16'b11_0_1_0nnn_0000_1110
Register Mnemonic:			PHY_PCS_ISO_RX_DATA_LO
Bits	**Type**	**Reset**	**Description**
15:0	R/O	16'h0000	Current value of pipe_rx_data[15:0] PHY output. (Not re-synchronized to apb_pclk)

Table 64: PCS PIPE RX data low isolation register

Register Name:			PCS RX data high isolation register (@)
Register Address:			16'b11_0_1_0nnn_0000_1111
Register Mnemonic:			PHY_PCS_ISO_RX_DATA_HI
Bits	**Type**	**Reset**	**Description**
15:0	R/O	16'h0000	Current value of pipe_rx_data[31:16] PHY output. (Not re-synchronized to apb_pclk)

Table 65: PCS PIPE RX data high isolation register

Register Name:			Ethernet MAC clock configuration isolation register (&)
Register Address:			16'b11_0_1_0nnn_0001_0000
Register Mnemonic:			PHY_ETH_ISO_MAC_CLK_CFG
Bits	**Type**	**Reset**	**Description**
15:2	R/O	14'h0000	Reserved
1:0	R/W	2'h0	Drives mac_src_sel PHY input for the associated lane when in PHY macro and PMA isolation mode.

Table 66: Ethernet MAC clock configuration isolation register

Register Name:			Ethernet MAC clock divider isolation register (&)
Register Address:			16'b11_0_1_0nnn_0001_0001
Register Mnemonic:			PHY_ETH_ISO_MAC_CLK_DIV
Bits	**Type**	**Reset**	**Description**
15:7	R/W	9'd1	Drives mac_div_sel1 PHY input for the associated lane when in PHY macro and PMA isolation mode.
6:0	R/W	7'd1	Drives mac_div_sel0 PHY input for the associated lane when in PHY macro and PMA isolation mode.

Table 67: Ethernet MAC clock divider isolation register

7.3.2 PMA isolation

Register Name:			PMA common control signal isolation register
Register Address:			16'b11_1_0_0000_0000_0100
Register Mnemonic:			PHY_PMA_ISO_CMN_CTRL
Bits	**Type**	**Reset**	**Description**
15	R/W	1'b0	Drives cmn_ref_clk_term_en PMA input when in PHY macro or PMA isolation modes
14	R/W	1'b0	Drives cmn_ref_clk_dig_sel PMA input when in PHY macro or PMA isolation modes
13:12	R/W	2'h0	Drives cmn_ref_clk_dig_div PMA input when in PHY macro or PMA isolation modes
11:10	R/W	2'd0	Drives cmn_ref_clk_int_mode PMA input when in PHY macro and PMA isolation modes.
9:8	R/W	2'd0	Drives cmn_ref_clk0_mode PMA input when in PHY macro and PMA isolation modes.
7	R/O	1'b0	Current value of cmn_clock_stop_ack PMA output.
6	R/W	1'b0	Drives cmn_clock_stop_req PMA input when in PMA isolation mode
5	R/O	1'b0	Reserved
4	R/W	1'b0	Drives cmn_ref_clk0_clk_gate_en PMA input when in PMA isolation mode.
3	R/W	1'b0	Drives cmn_refclk_disable PMA input when in PMA isolation mode.
2	R/W	1'b0	Drives cmn_macro_suspend_req PMA input when in PMA isolation mode.
1	R/O	1'b0	Reserved
0	R/W	1'b1	Drives cmn_reset_n PMA input when in PMA isolation mode.

Table 68: PMA common control signal isolation register

Register Name:			PMA PLL control0 isolation register
Register Address:			16'b11_1_0_0000_0000_0101
Register Mnemonic:			PHY_PMA_ISO_PLL_CTRL0
Bits	**Type**	**Reset**	**Description**
15:8	R/O	8'd0	Reserved
7	R/W	1'b0	Drives cmn_pll1_ref_clk_sel PMA input when in PHY macro or PMA isolation mode.
6	R/W	1'b0	Drives cmn_pll0_ref_clk_sel PMA input when in PHY macro or PMA isolation mode.
5	R/W	1'b0	Drives cmn_pll1_mode_sel PMA input when in PMA isolation mode.
4	R/W	1'b0	Drives cmn_pll0_mode_sel PMA input when in PMA isolation mode.
3	R/W	1'b0	Drives cmn_pll1_clk_en PMA input when in PMA isolation mode
2	R/W	1'd0	Drives cmn_pll0_clk_en PMA input when in PMA isolation mode
1	R/W	1'd1	Drives cmn_pll1_en PMA input when in PMA isolation mode
0	R/W	1'd1	Drives cmn_pll0_en PMA input when in PMA isolation mode

Table 69: PMA PLL control0 isolation register

Register Name:			PMA PLL control1 isolation register
Register Address:			16'b11_1_0_0000_0000_0110
Register Mnemonic:			PHY_PMA_ISO_PLL_CTRL1
Bits	**Type**	**Reset**	**Description**
15:12	R/W	4'h1	Drives cmn_pll1_clk_datart1_div PMA input when in PMA isolation mode
11:8	R/W	4'h1	Drives cmn_pll1_clk_datart0_div PMA input when in PMA isolation mode
7:4	R/W	4'h2	Drives cmn_pll0_clk_datart1_div PMA input when in PMA isolation mode
3:0	R/W	4'h4	Drives cmn_pll0_clk_datart0_div PMA input when in PMA isolation mode

Table 70: PMA PLL control1 isolation register

Register Name:			PMA Isolation control register
Register Address:			16'b11_1_0_0000_0000_1111
Register Mnemonic:			PHY_PMA_ISOLATION_CTRL
Bits	**Type**	**Reset**	**Description**
15	R/W	1'b0	PHY/PMA isolation enable (isolation_en) - When set, enables isolation (PHY or PMA).
14	R/W	1'b0	PHY/PMA common isolation enable (cmn_isolation_en) - When in PHY Macro Isolation Mode, the PHY common isolation register(s) are selected. When in PMA Isolation Mode, the PMA common isolation register(s) are selected.
13	R/O	1'd0	Reserved
12	R/W	1'b0	PHY/PMA isolation mode select (isolation_mode_sel) - When isolation_en is set, this bit selects between PHY isolation mode and PMA isolation mode. 0 = PHYMacro isolation mode; 1 = PMA isolation mode.
11:8	R/O	4'd0	Reserved
7:0	R/W	8'd0	PHY/PMA lane isolation enable (ln_isolation_en) - When in PHY Macro Isolation Mode, the selected PHY lane(s) isolation registers are selected. When in PMA Isolation Mode, the selected PMA lane(s) isolation registers are selected.

Table 71: PMA control isolation register

Register Name:			PMA Transceiver control isolation register
Register Address:			16'b11_1_1_0nnn_0000_0011
Register Mnemonic:			PHY_PMA_ISO_XCVR_CTRL
Bits	**Type**	**Reset**	**Description**
15	R/O	1'b0	Current value of xcvr_pll_clk_en_ack PMA output for the associated lane.
14	R/O	1'b0	Reserved
13	R/W	1'b0	Drives tx_lfps_en PMA input for the associated lane when in PMA isolation mode.
12	R/W	1'b0	Drives tx_elec_idle PMA input for the associated lane when in PMA isolation mode or PHY isolation mode and lane is configured for Raw SerDes mode.
11	R/O	1'b0	Current value of tx_rcv_detected PMA output for the associated lane. (Not re-synchronized to apb_pclk)
10	R/O	1'b0	Current value of tx_rcv_detect_done PMA ouptut for the associated lane.
9	R/W	1'b0	Drives tx_rcv_detect_en PMA input for the associated lane when in PMA isolation mode or PHY isolation mode and lane is configured for Raw SerDes mode.
8	R/W	1'b0	Drives xcvr_link_reset_n PMA input for the associated lane when in PMA isolation mode.
7	R/W	1'b0	Drives xcvr_pll_clk_en PMA input for the associated lane when in PMA isolation mode or PHY isolation mode and lane is configured for Raw SerDes mode.
6	R/O	1'b0	Reserved
5	R/W	1'b0	Drives xcvr_lane_suspend PMA input for the associated lane when in PMA isolation mode.
4	R/O	1'b0	Current value of rx_lfps_detect PMA output for the associated lane.
3	R/O	1'b0	Current value of rx_signal_detect PMA output for the associated lane.
2	R/O	1'b0	Reserved
1	R/W	1'b0	Drives rx_termination PMA input for the associated lane when in PMA isolation mode or PHY isolation mode and lane is configured for Raw SerDes mode.
0	R/O	1'b0	Reserved

Table 72: PMA transceiver control isolation register

Register Name:			PMA transmitter local preset coefficient low isolation register
Register Address:			16'b11_1_1_0nnn_0000_0100
Register Mnemonic:			PHY_PMA_ISO_TX_LPC_LO
Bits	**Type**	**Reset**	**Description**
15:14	R/O	2'b00	Reserved
13:8	R/O	6'h00	Value of tx_local_tx_preset_coef[11:6] PMA output for the associated lane captured upon assertion of tx_local_preset_coef_valid for the associated lane. Cleared upon read.
7:6	R/O	2'b00	Reserved
5:0	R/O	6'h00	Value of tx_local_tx_preset_coef[5:0] PMA output for the associated lane captured upon assertion of tx_local_preset_coef_valid for the associated lane. Cleared upon read.

Table 73: PMA Tx local preset coefficient low isolation register

Register Name:			PMA transmitter local preset coefficient high isolation register
Register Address:			16'b11_1_1_0nnn_0000_0101
Register Mnemonic:			PHY_PMA_ISO_TX_LPC_HI
Bits	**Type**	**Reset**	**Description**
15	R/O	1'b0	Current value of tx_local_preset_coef_valid PMA output for the associated lane.
14:13	R/O	2'd0	Reserved
12	R/W	1'b0	Drives tx_get_local_preset_coef PMA input for the associated lane when in PMA isolation mode or PHY isolation mode and lane is configured for Raw SerDes mode.
11:8	R/W	4'h0	Drives tx_local_preset_index PMA input for the associated lane when in PMA isolation mode or PHY isolation mode and lane is configured for Raw SerDes mode.
7:6	R/O	2'b00	Reserved
5:0	R/O	6'h00	Value of tx_local_tx_preset_coef[17:12] PMA output for the associated lane captured upon assertion of tx_local_preset_coef_valid for the associated lane. Cleared upon read.

Table 74: PMA Tx local preset coefficient high isolation register

Register Name:			PMA Tx de-emphasis low isolation register
Register Address:			16'b11_1_1_0nnn_0000_0110
Register Mnemonic:			PHY_PMA_ISO_TX_DMPH_LO
Bits	**Type**	**Reset**	**Description**
15:14	R/O	2'd0	Reserved
13:8	R/W	6'd0	Drives tx_deemphasis[11:6] PMA input for the associated lane when in PMA isolation mode or PHY isolation mode and lane is configured for Raw SerDes mode.
7:6	R/O	2'd0	Reserved
5:0	R/W	6'd0	Drives tx_deemphasis[5:0] PMA input for the associated lane when in PMA isolation mode or PHY isolation mode and lane is configured for Raw SerDes mode.

Table 75: PMA Tx de-emphasis low isolation register

Register Name:			PMA Tx de-emphasis high isolation register
Register Address:			16'b11_1_1_0nnn_0000_0111
Register Mnemonic:			PHY_PMA_ISO_TX_DMPH_HI
Bits	**Type**	**Reset**	**Description**
15:6	R/O	10'd0	Reserved
5:0	R/W	6'd0	Drives tx_deemphasis[17:12] PMA input for the associated lane when in PMA isolation mode or PHY isolation mode and lane is configured for Raw SerDes mode.

Table 76: PMA Tx de-emphasis high isolation register

Register Name:			PMA Tx FS/LF isolation register
Register Address:			16'b11_1_1_0nnn_0000_1000
Register Mnemonic:			PHY_PMA_ISO_TX_FSLF
Bits	**Type**	**Reset**	**Description**
15:14	R/O	2'd0	Reserved
13:8	R/O	6'd0	Current value of tx_local_fs PMA ouptut for the associated lane. (Not re-synchronized to apb_pclk) Note: In a RTL simulation without UPF, the reset value of this field will be 0x2D.
7:6	R/O	2'd0	Reserved
5:0	R/O	6'd0	Current value of tx_local_lf PMA ouptut for the associated lane. (Not re-synchronized to apb_pclk) Note: In a RTL simulation without UPF, the reset value of this field will be 0x0F.

Table 77: PMA Tx FS/LF isolation register

Register Name:			PMA TX margin register
Register Address:			16'b11_1_1_0nnn_0000_1001
Register Mnemonic:			PHY_PMA_ISO_TX_MGN
Bits	**Type**	**Reset**	**Description**
15:9	R/O	7'h00	Reserved
8	R/W	1'b0	Drives tx_low_power_swing_en PMA input for the associated lane when in PMA isolation mode or PHY isolation mode and lane is configured for Raw SerDes mode.
7:3	R/O	5'h00	Reserved
2:0	R/W	3'b000	Drives tx_vmargin PMA input for the associated lane when in PMA isolation mode or PHY isolation mode and lane is configured for Raw SerDes mode.

Table 78: PMA Tx margin isolation register

Register Name:			PMA Isolation mode control register
Register Address:			16'b11_1_1_0nnn_0000_1010
Register Mnemonic:			PHY_PMA_ISO_LINK_MODE
Bits	**Type**	**Reset**	**Description**
15	R/W	1'b1	tx_reset_n_ln_{nnnn} PMA input when in PMA isolation mode.
14	R/W	1'b1	rx_reset_n_ln_{nnnn} PMA input when in PMA isolation mode.
13:6	R/O	8'd0	Reserved
5:4	R/W	2'd0	Drives xcvr_standard_mode_ln_{nnnn} PMA input when in PMA isolation mode or PHY isolation mode and lane is configured for Raw SerDes mode.
3	R/O	1'b0	Reserved
2:0	R/W	3'd0	Drives xcvr_data_width_ln_{nnnn} PMA input when in PMA isolation mode or PHY isolation mode and lane is configured for Raw SerDes mode.

Table 79: PMA Link Mode isolation register

Register Name:			PMA Isolation power state control register
Register Address:			16'b11_1_1_0nnn_0000_1011
Register Mnemonic:			PHY_PMA_ISO_PWRST_CTRL
Bits	**Type**	**Reset**	**Description**
15	R/W	1'b0	rx_sig_det_en_ext_ln_{nnnn} PMA input when in PMA isolation mode. (Used for PCIe)
14	R/W	1'b0	tx_cmn_mode_en_ext_ln_{nnnn} PMA input when in PMA isolation mode. (Used for PCIe)
13:8	R/O	6'h00	Current value of xcvr_power_state_ack_ln_{nnnn} PMA output.
7:6	R/O	2'b00	Reserved
5:0	R/W	6'h00	Drives xcvr_power_state_req_ln_{nnnn} PMA input when in PMA isolation mode or PHY isolation mode and lane is configured for Raw SerDes mode..

Table 80: PMA Link Power State Control isolation register

Register Name:			PMA RX equalization control isolation register
Register Address:			16'b11_1_1_0nnn_0000_1101
Register Mnemonic:			PHY_PMA_ISO_RX_EQ_CTRL
Bits	**Type**	**Reset**	**Description**
15:14	R/O	2'd0	Reserved
13	R/W	1'b0	Drives rx_eq_training_data_valid PMA input for the associated lane when in PMA isolation mode or PHY isolation mode and lane is configured for Raw SerDes mode.
12	R/W	1'b0	Drives rx_eq_training PMA input for the associated lane when in PMA isolation mode or PHY isolation mode and lane is configured for Raw SerDes mode.
11:10	R/O	2'd0	Reserved
9:4	R/O	6'h00	The value of rx_link_eval_fb_dir_change PMA output for the associated lane upon assertion of rx_eq_eval_status to PMA. Cleared upon read.
3	R/O	1'b0	The value of rx_eq_eval_complete PMA output for the associated lane upon assertion of rx_eq_eval_status. Cleared upon read.
2	R/W	1'b0	Drives rx_invalid_request PMA input for the associated lane when in PMA isolation mode.
1	R/O	1'b0	Current value of rx_eq_eval_status PMA output for the associated lane.
0	R/W	1'b0	Drives rx_eq_eval PMA input for the associated lane when in PMA isolation mode or PHY isolation mode and lane is configured for Raw SerDes mode.

Table 81: PMA Rx equalization control isolation register

Register Name:			PMA low data isolation register
Register Address:			16'b11_1_1_0nnn_0000_1110
Register Mnemonic:			PHY_PMA_ISO_DATA_LO
Bits	**Type**	**Reset**	**Description**
15:0	R/O	16'h0000	Current value of rx_rd[15:0] PMA output for the current lane. (Not re-synchronized to apb_pclk). This register can be written and the value will drive tx_td[15:0] for the associated lane when in PMA isolation mode or PHY isolation mode and lane is configured for Raw SerDes mode.

Table 82: PMA low data isolation register

Register Name:			PMA high data isolation register
Register Address:			16'b11_1_1_0nnn_0000_1111
Register Mnemonic:			PHY_PMA_ISO_DATA_HI
Bits	**Type**	**Reset**	**Description**
15:4	R/O	12'h000	Reserved
3:0	R/O	4'h0	Current value of rx_rd[19:16] PMA output for the current lane. (Not re-synchronized to apb_pclk). This register can be written and the value will drive tx_td[19:16] for the associated lane when in PMA isolation mode or PHY isolation mode and lane is configured for Raw SerDes mode.

Table 83: PMA high data isolation register

8 Testability

The testability information provided here is in reference to PCIe PHY macro top level features only. One should consult the specifications for the respective components in the PCIe PHY (such as the PMA and the PCIe PCS) for information about the additional testability features available in these components.

8.1 Scan

The PHY is a soft core which includes the hardened PMA macro. The soft core hence does not have any scan chains or scan structures built into it except ones listed below. The PMA macro, since it is hardened, has scan built into it. For more details, one should consult the PMA spec. At the PHY soft core, the scan structures that are provided as an aid to scan insertion are:

- scan ports like scanclks, scanins, scanouts, scanens and scanmodes
- The scanmodes/scanens have been used in the rtl to bypass internal clocks and resets with appropriate top level scan clocks and functional resets respectively.

8.2 IDDQ

IDDQ mode is entered through the assertion of iddq_en, and the cessation of the reference clock to the PHY.

9 PHY Timing Specifications

This section provides a summary of the timing characteristics specific to the Superspeed PCIe PHY macro. This includes the interfaces to both the ASIC core and off-chip connections. Detailed timing information for synthesis will be provided in Liberty view models of the macro.

- All core-interface pins with timing relationships indicated as async are asynchronous. Depending on the function, these pins are either required to be stable when the macro is enabled, or will be synchronized appropriately internal to the macro. In the case when the signals are required to be stable prior to the macro being enabled, this will be indicated in the description of the signal.
- All core-interface inputs have less than 100fF input capacitance.
- The drive strength for all ASIC core outputs is equivalent to X4 buffer unless otherwise indicated.
- All macro output timing provided below includes a 120fF load external to the macro.

9.1 General Timing Specifications

Name	Min	Typ	Max	Units	Description
Data rate		2.5		Gb/s	PCIe Gen 1 mode.
		5.0			PCIe Gen 2 mode.
		8.0			PCIe Gen 3 mode.
		5.0			USB3 Gen 1 (Superspeed) mode.
		10.0			USB3 Gen 2 (SuperspeedPlus) mode.
		1.5			SATA Gen 1 mode.
		3.0			SATA Gen 2 mode.
		6.0			SATA Gen 3 mode.
	1.62		8.1		DP/eDP Tx mode
		1.25			1GE mode.
		2.5			Ethernet 2.5 Gbps mode.
		5			Ethernet 5 Gbps mode.
	1.25		10.3125		JESD-204B.
F_{refclk}		100		MHz	Reference clock frequency.
DC_{refclk}	40	50	60	%	Reference clock duty cycle.
F_{apb_pclk}			200	MHz	apb_pclk clock frequency.
DC_{apb_pclk}	40		60	%	apb_pclk clock duty cycle.

Table 84: General timing specifications

F_{pipe_clk}				MHz	pipe_l*_clk clock frequency.
		62.5/ 125			PCIe Gen 1 mode with 32/16-bit PIPE interface data width.
		125/ 250			PCIe Gen 2 mode with 32/16-bit PIPE interface data width.
		250/ 500			PCIe Gen 3 mode with 32/16-bit PIPE interface data width.
		125/ 250			USB3 Gen 1 mode with 32/16-bit PIPE interface data width.
		312.5/ 625			USB3 Gen 3 mode with 32/16-bit PIPE interface data width.
		37.5/75			SATA Gen 1 mode with 32/16-bit PIPE interface data width.
		75/150			SATA Gen 2 mode with 32/16-bit PIPE interface data width.
		150/ 300			SATA Gen 3 mode with 32/16-bit PIPE interface data width.
DC_{pipe_clk}	40		60	%	pipe_l*_clk clock duty cycle.
F_{phy_refclk}		25		MHz	PHY internal reference clock frequency.
$F_{phy_pllclk_datart}$ $F_{pma_tx_td_clk}$ $F_{pma_rx_rd_clk}$				MHz	pma_pllclk_datart_ln_{n:0} / pma_tx_td_clk_ln_{n:0} / pma_rx_rd_clk_ln_{n:0} clock frequency.
		125			PCIe Gen 1
		250			PCIe Gen 2 / USB Gen 1
		500			PCIe Gen 3
		625			USB Gen 2
		75			SATA Gen 1
		150			SATA Gen 2
		300			SATA Gen 3
	81		405		DP/eDP Tx
		62.5			1GE mode.
		125			Ethernet 2.5 Gbps mode.
		250			Ethernet 5 Gbps mode.
	62.5		515.625		JESD204B.
$DC_{phy_pllclk_datart}$	40		60	%	pma_pllclk_datart clock duty cycle.

Name	Min	Typ	Max	Units	Description
$F_{phy_pllclk_fullrt}$				MHz	pma_pllclk_fullrt clock frequency.
		62.5/ 125			PCIe Gen 1 mode with 32/16-bit PIPE interface data width.
		125/ 250			PCIe Gen 2 mode with 32/16-bit PIPE interface data width.
		250/ 500			PCIe Gen 3 mode with 32/16-bit PIPE interface data width.
		125/ 250			USB3 Gen 1 mode with 32/16-bit PIPE interface data width.
		312.5/ 625			USB3 Gen 3 mode with 32/16-bit PIPE interface data width.
		37.5/75			SATA Gen 1 mode with 32/16-bit PIPE interface data width.
		75/150			SATA Gen 2 mode with 32/16-bit PIPE interface data width.
		150/ 300			SATA Gen 3 mode with 32/16-bit PIPE interface data width.
			810		DP Tx mode with 32/16-bit PIPE interface data width.
			500		Ethernet mode with 32/16-bit PIPE interface data width.
			1031.25		JESD204B mode with 32/16-bit PIPE interface data width.
$DC_{phy_pllclk_fullrt}$	40		60	%	pma_pllclk_fullrt clock frequency
F_{tap_tck}	4		100	MHz	tap_tck clock frequency.
DC_{tap_tck}	40		60	%	tap_tck clock duty cycle.
$F_{scan_shift_clock}$			200	MHz	Scan shift clock frequency.
$T_{reset_pulse_width}$	2			refclk	Minimum pulse width of active reset.

Table 84: General timing specifications (Continued)

9.2 Power State Transition Timing Specification

The following transition times assume a 100 MHz reference clock. For other reference clock frequencies and modes of operation use the formula in the description which is based on PMA transitions times described in the PMA specification. The power state transition times for the PHY Raw SerDes interface are a direct 1-to-1 mapping with values listed in the PMA specification.

Name	Min	Typ	Max	Units	Description
$t_{enable\ (PIPE)}$			660.5	us	Time to enable PHY. (De-assertion of phy_reset_n to de-assertion of pipe_<>_phy_status for all links with pipe_<>_reset_n de-asserted) • = $t_{rst_to_ready}$ + $t_{psm_idle_to_ready}$ + $t_{psm_ready_to_a2}$ + 200 ns
$t_{enable\ (Raw)}$			660.3 + N	us	Time to enable PHY. (De-assertion of phy_reset_n to assertion of pma_xcvr_power_state_ack[2] for all links with pipe_<>_reset_n de-asserted) • = $t_{rst_to_ready}$ + $t_{psm_idle_to_ready}$ + $t_{psm_ready_to_a2}$ + N usec • Where N is controller latency to assert pma_xcvr_pllclk_en_ln_<> and pma_xcvr_power_state_req_ln_<>[2].
$t_{ln_enable\ (PIPE)}$			86.5	us	Time to enable a link after normal PHY startup. (De-assertion of pipe_<>_reset_n to de-assertion of pipe_<>_phy_status). • = $t_{psm_idle_to_ready}$ + $t_{psm_ready_to_a2}$ + 400 ns

Table 85: PHY state transition timing specifications

Name	Min	Typ	Max	Units	Description
$t_{P0_to_P0s}$ (PCIe) $t_{P0_to_P1}$ (USB3/SATA)			504	ns	Time to transition from P0 to P0s (PCIe) / P0 to P1 (USB/SATA) power states (from pipe_<>_powerdown to assertion of pipe_<>_phy_status). • = $t_{a0_to_a1}$ + 200 ns
$t_{P0s_to_P0}$ (PCIe) $t_{P1_to_P0}$ (USB3/SATA)			434	ns	Time to transition from P0s to P0 (PCIe) / P1 to P0 (USB/SATA) power states (from pipe_<>_powerdown to assertion of pipe_<>_phy_status). • = $t_{a1_to_a0}$ + 200 ns
$t_{P0_to_P1}$ (PCie) $t_{P0_to_P2}$ (USB3/SATA)			679	ns	Time to transition from P0 to P1 (PCIe) / P0 to P2 (USB/SATA) power states (from pipe_<>_powerdown to assertion of pipe_<>_phy_status). • = $t_{a0_to_a2}$ + 200 ns
$t_{P0_to_P2}$ (PCIe) $t_{P0_to_P3}$ (USB3/SATA) (w/o suspending common)			1014	nS	Time to transition from P0 to P2 (PCIe) / P0 to P3 (USB/SATA) power states without suspending PMA common (from pipe_<>_powerdown to de-asssertion of pipe_<>_phy_status). • = $t_{a0_to_a3}$ + 500 ns
$t_{P0_to_P2}$ (PCIe) $t_{P0_to_P3}$ (USB3/SATA) (w/ suspending common)			2574	nS	Time to transition from P0 to P2 (PCIe) / P0 to P3 (USB/SATA) power states with suspension of PMA common (from pipe_<>_powerdown to de-asssertion of pipe_<>_phy_status). • = $t_{a0_to_a3}$ + $t_{susreq_to_susack}$ + $t_{ref_dis_to_ref_act}$ + 500 ns
$t_{P2_to_P0}$ (PCIe) $t_{P3_to_P0}$ (USB3/SATA) (w/o resuming common)			4.3 (PCIe) 3.5 (USB) 5.4 (SATA)	uS	Tme to transition from P2 to P0 (PCIe) / P3 to P0 (USB/SATA) power states without needing to resume PMA common (from pipe_<>_powerdown to de-assertion of pipe_<>_phy_status). • = $t_{a3_to_a0}$ + 500 ns
$t_{P2_to_P0}$ (PCIe) $t_{P3_to_P0}$ (USB3/SATA) (w/ resuming common)			21.8 (PCIe) 21 (USB) 22.9 (SATA)	uS	Tme to transition from P2 to P0 (PCIe) / P3 to P0 (USB/SATA) power states with resuming PMA common (from pipe_<>_power-down to de-assertion of pipe_<>_phy_status). • = $t_{susreq_to_ready}$ + $t_{a3_to_a0}$ + 500 ns
$t_{P1_to_P0}$ (PCIe) $t_{P2_to_P0}$ (USB3/SATA)			4 (PCIe) 3.2 (USB) 5.1 (SATA)	uS	Time to transition from P1 to P0 (PCIe) / P2 to P0 (USB/SATA) power states (from pipe_<>_powerdown to assertion of pipe_<>_phy_status) if the rate was changed to Gen1 while in the P1 power state. • = $t_{a2_to_a0}$ + 200 ns
$t_{P1_to_L1.x}$ (PCIe) (w/o suspending common)			874	nS	Time to transition from P1 to L1.1/L1.2 power states (from asser-tion of phy_<>_ent_l1_x to assertion of phy_<>_ack_l1 or from pipe_<>_powerdown to de-assertion of pipe_<>_phy_status). • = $t_{a2_to_a4}$ + 500 ns
$t_{P1_to_L1.x}$ (PCIe) (w suspending common)			2434	nS	Time to transition from P1 to L1.1/L1.2 power states (from asser-tion of phy_<>_ent_l1_x to assertion of phy_<>_ack_l1 or from pipe_<>_powerdown to de-assertion of pipe_<>_phy_status). • = $t_{susreq_to_susack}$ + $t_{ref_dis_to_ref_act}$ + $t_{a2_to_a4}$ + 500 ns
$t_{L1.1_to_P1}$ (PCIe) (w/o resuming common)			979	nS	Time to transition from L1.1 to P1 power states (from de-asser-tion of phy_<>_ent_l1_x to de-assertion of phy_<>_ack_l1 or from pipe_<>_powerdown to de-assertion of pipe_<>_phy_sta-tus). • = $t_{a4_to_a2_no_fecm}$ + 500 ns

Table 85: PHY state transition timing specifications

Name	Min	Typ	Max	Units	Description
$t_{L1.2_to_P1}$ (PCIe) (w/o resuming common)			16.2	uS	Time to transition from L1.2 to P1 power states (from de-assertion of phy_<>_ent_l1_x to de-assertion of phy_<>_ack_l1 or from pipe_<>_powerdown to de-assertion of pipe_<>_phy_status). • = $t_{a4_to_a2_fecm}$ + 500 ns
$t_{L1.x_to_P1}$ (PCIe) (w/ resuming common)			18.5	uS	Time to transition from L1.1/1.2 to P1 power states (from de-assertion of phy_<>_ent_l1_x to de-assertion of phy_<>_ack_l1 or from pipe_<>_powerdown to de-assertion of pipe_<>_phy_status). • = $t_{susreq_to_ready}$ + $t_{a4_to_a2_no_fecm}$ + 500 ns
$t_{To_PCIe_Gen1}$			110.2	uS	Time to transition from PCIe Gen 1 data rate to Gen 2 data rate (from pipe_<>_rate to assertion of pipe_<>_phy_status). • = $t_{a0_to_a3}$ + $t_{susreq_to_susack}$ + $t_{susreq_to_ready}$ + $t_{a3_to_a2_cal}$ + $t_{a2_to_a0}$ + 800 ns
$t_{To_PCIe_Gen2}$			109.5		
$t_{To_PCIe_Gen3}$			109.1		
$t_{To_USB3_Gen1}$			109.5		
$t_{To_USB3_Gen2}$			109.1		
$t_{disable}$			0	ns	Time to disable PHY.

Table 85: PHY state transition timing specifications

For multi-link configurations, for any power state change where common can be resumed, a corner case exists based on a race condition between separate links. For example for the L1.x exit case, a race condition could result in common being suspended and then immediately resumed. In this case, the L1.x exit latency would be extended by the L1.x entry latency for the link in question.

9.3 PIPE PCS Transmit and Receive Latency

Name	Average	Units (clock cycles)	Description
PCS $Txlatency_{StdPIPE}$	8/5	pipe_clk	Transmit latency from PIPE interface (Standard PIPE mode) to PMA tx_td_ln_* input (16-bit PIPE data width/ 32-bit PIPE data width).
PCS $Txlatency_{SrcSyncPIPE}$	10/7	pipe_clk_in	Transmit latency from PIPE interface (Source Synchronous PIPE mode) to PMA tx_td_ln_* input (16-bit PIPE data width/32-bit PIPE data width).
PCS $Rxlatency_{PIPE_BlkEncRate}$	23/12	pipe_clk	Receive latency from PMA rx_rd_ln_*[] output to PIPE interface for nominal half-full elasticity buffer mode for PCIe Gen 3 and USB3 Gen 2 data rates (16-bit PIPE data width/32-bit PIPE data width).
PCS $Rxlatency_{PIPE_8b10EncRate}$	19/10	pipe_clk	Receive latency from PMA rx_rd_ln_*[] output to PIPE interface for nominal half-full elasticity buffer mode for PCIe Gen 1/2, USB3 Gen 1 and SATA data rates (16-bit PIPE data width/32-bit PIPE data width).

Table 86: PHY-level (PCS) Transmit and Receiver Latency

The total PHY latency is the PCS + PMA latency. PCS transmit latency is measured from PIPE interface to PMA parallel data input. PCS receive latency is measured from PMA parallel recovered data output to PIPE interface.

9.4 N-FTS

The number of FTS ordered sets required to (re-)obtain bit and symbol lock are:

- 120 for PCIe Gen 1 and 2.
- 40 for PCIe Gen 3.

10 PHY Operation

This section provides description and timing diagrams for PHY operation. Unless otherwise described in this specification, the macro's PIPE interface is compliant with the timing diagrams described in the PIPE v4.0 specification.

# indicates the master lane of a link.

10.1 Start-up Sequence Timing Diagram

The below diagrams assume 2 single lane links (i.e. PHY configured as 2x1, 2 independent single-lane links), in which one link is enabled at start-up and the other link is enabled after the first link has been enabled. The first diagram shows 2 PIPE links and the second 2 Raw SerDes links. A link (whether single or multi-lane) is enabled at start-up when phy_l*_reset_n is high upon de-assertion of phy_reset_n (high). A link is disabled at start-up by asserting phy_l*_reset_n low upon de-assertion of phy_reset (high).

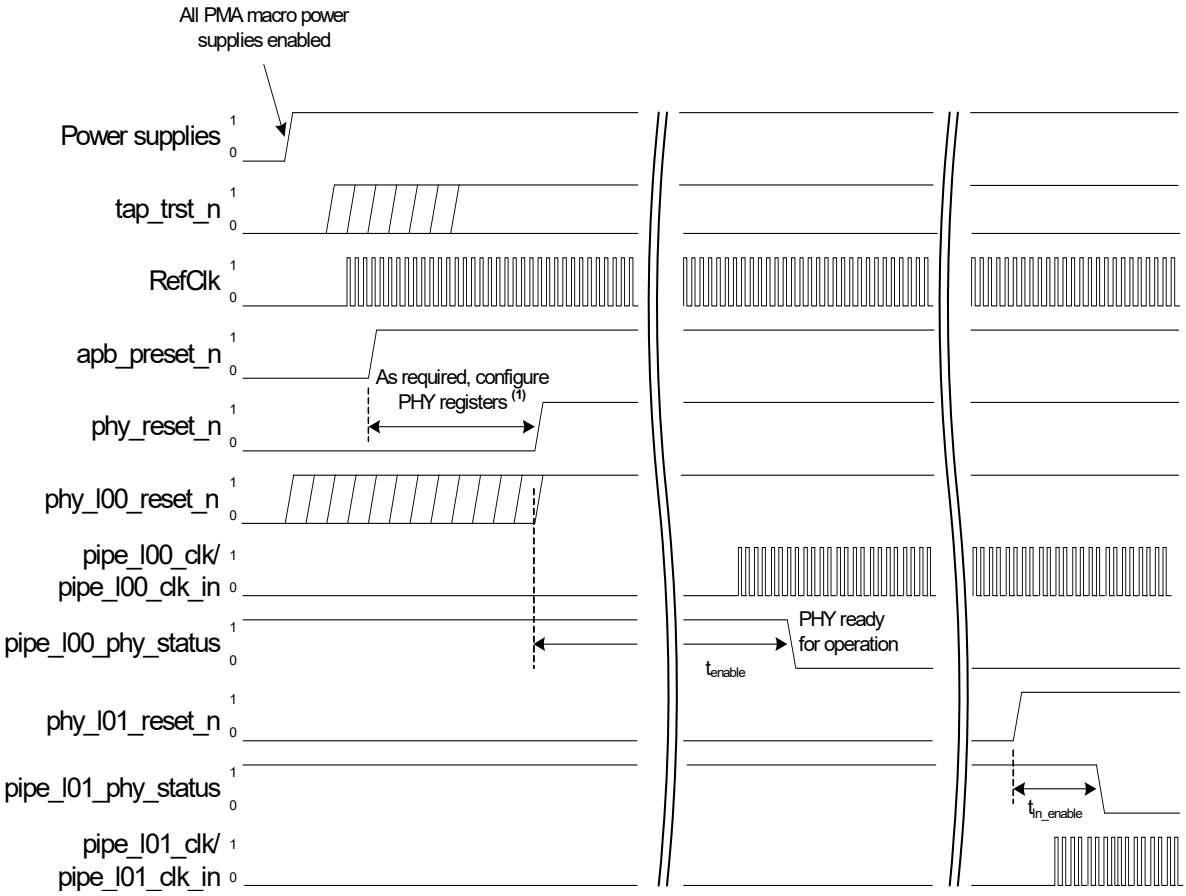

Figure 12: PIPE Start-up sequence

(1) Configure PHY and PMA APB registers as required for the selected PHY modes of operation to be supported between de-assertion of apb_preset_n and de-assertion of phy_reset_n.

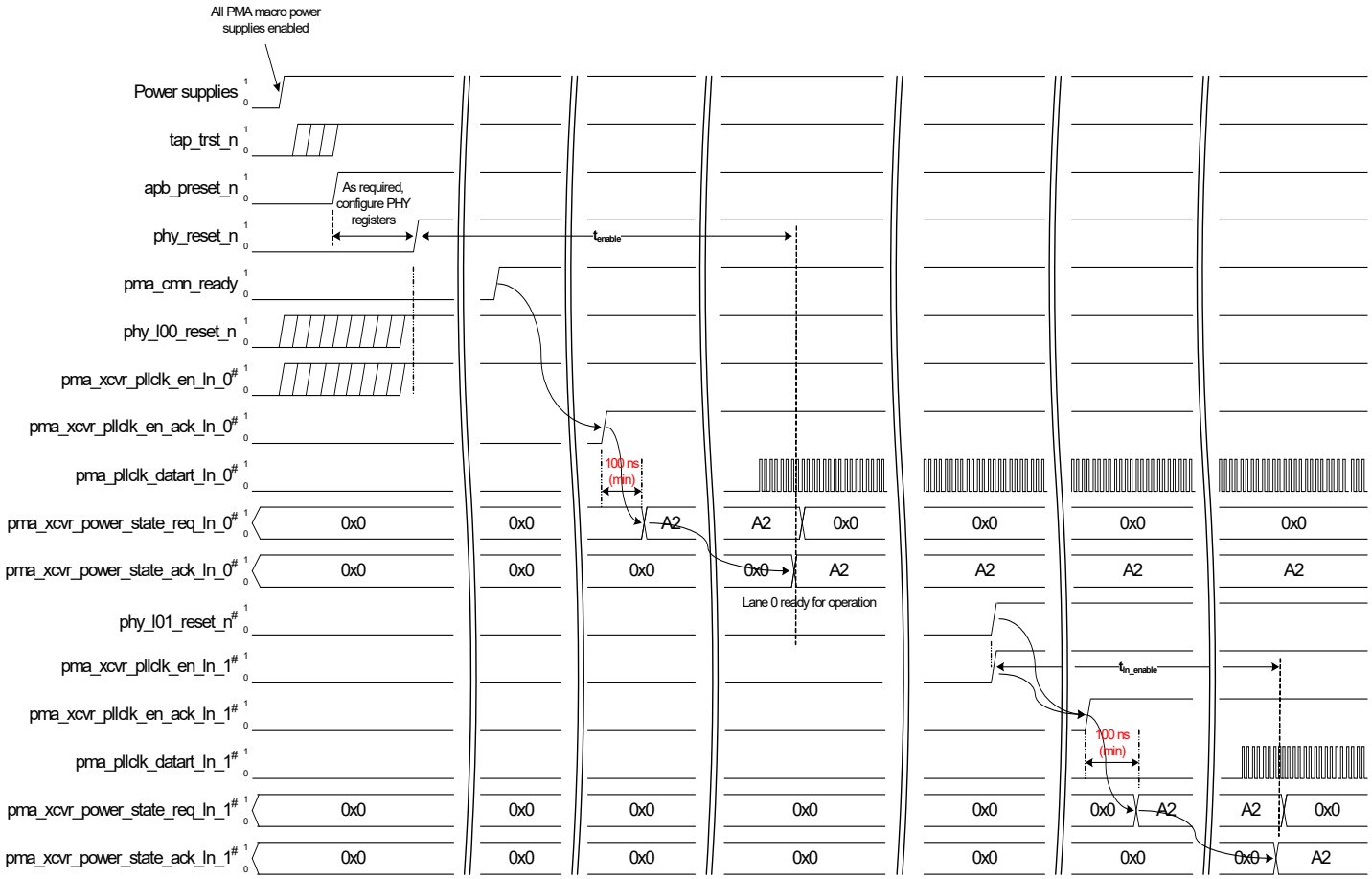

Figure 13: Raw SerDes Start-up sequence

Upon release of reset for a link (i.e. phy_reset_n when the link is enabled at start-up or phy_l*_reset_n otherwise), pma_xcvr_power_state_req_ln_* shall be set to 0x0 for a Raw SerDes link and pma_xcvr_pllclk_en_ln_* shall be asserted high. Upon assertion high of pma_xcvr_pllclk_en_ack_ln_* (following assertion of pma_cmn_ready), pma_xcvr_power_state_req_ln_* can be set to A2. Upon entry into the A2 power state, the link power state can be changed to the A0 power state following Raw SerDes I/F power state change procedure described in 10.4 “Power state change” on page 80.

(1) Configure PHY and PMA APB registers as required for the selected PHY modes of operation to be supported after de-assertion of apb_preset_n and before de-assertion of phy_reset_n.

pma_xcvr_data_width_ln_* and pma_xcvr_standard_mode PHY inputs for the link must be set for the selected Raw SerDes mode prior to enabling the link.

10.2 PHY disable description

To disable the PHY and place it in its lowest power state, assert apb_preset_n and phy_reset_n low and disable cmn_refclk_<p/m> and apb_pclk. To re-enable the PHY follow the start-up sequence described above.

To disable a link, assert phy_l*_reset_n low for the link’s master lane. This will disable the link and place all PMA lanes of the link in their lowest power state (i.e. the powerdown disabled state).

When a link is disabled, its inputs must be driven with their initial/start-up/reset values as described in the PIPE specification, in Figure 12 and in Figure 13.

To re-enable the link, de-assert phy_l*_reset_n for the link’s master lane and follow the start-up sequence described above for enabling the second link.

For a single-link configuration, there is no difference between the PHY and the link. As such, phy_l00_reset_n operates the same as phy_reset_n.. In this case, the link cannot be disabled separate from the PHY. The above PHY disable procedure is used for either the link or the PHY when configured as a single-link.

10.3 Disabling reference clock to PHY

The reference clock to the PHY can be disabled (gated off low) when all links are either powerdown disabled (with phy_l*_reset_n driven low for the master lane of the link) or for PCIe links in the L1 substate (L1.x). When the last link is PCIe and is entering L1.x, the reference clock can be disabled to the PHY upon assertion high of phy_l*_ent_l1_x and phy_l*_ack_l1_x for the master lane of the link. When the last link is being powerdown disabled, the reference clock can be gated off 2 usec after the assertion of phy_l*_reset_n for the master lane of the link.

The reference clock must be enabled upon de-assertion low of phy_l*_ent_l1_x for the master lane of any PCIe link that is exiting L1.x or de-assertion high of phy_l*_reset_n for the master lane of any link that is exiting powerdown disabled.

When enabling/disabling the reference clock and the PHY is not in reset (phy_reset_n == 0), the clock must be cleanly turned on and off, such that no runt pulses are received by the PHY. Upon signaling exit from L1.x or upon enabling a link, the reference clock does not have to be active. However, the L1.x exit latency / link enable latency does not start until the reference clock does.

10.4 Power state change

10.4.1 PIPE

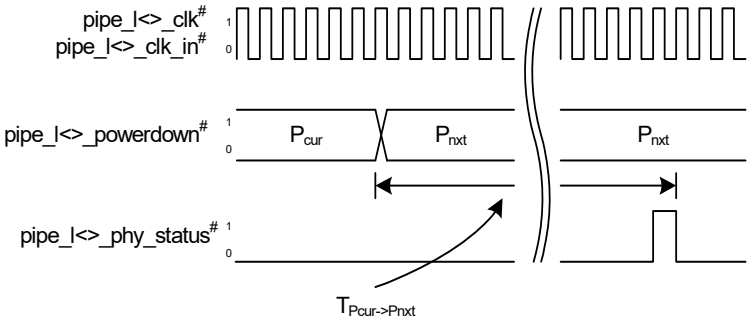

Figure 14: PIPE mode power state change (without PIPE clock stop)

For PCIe, this corresponds to P0/P0s/P1 -> P0/P0s/P1 power state change. For USB, this corresponds to P0/P1/P2 -> P0/P1/P2 power state change.

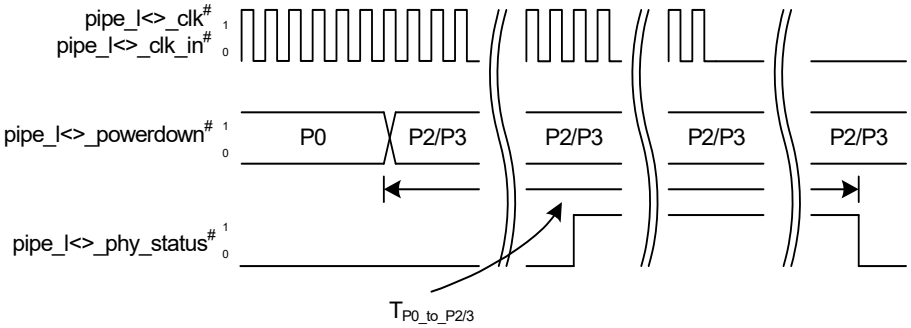

Figure 15: PIPE power state change (with PIPE clock stop)

For PCIe, this corresponds to P0/P1 -> P2 power state change. For USB, this corresponds to P0 to P3 power state change.

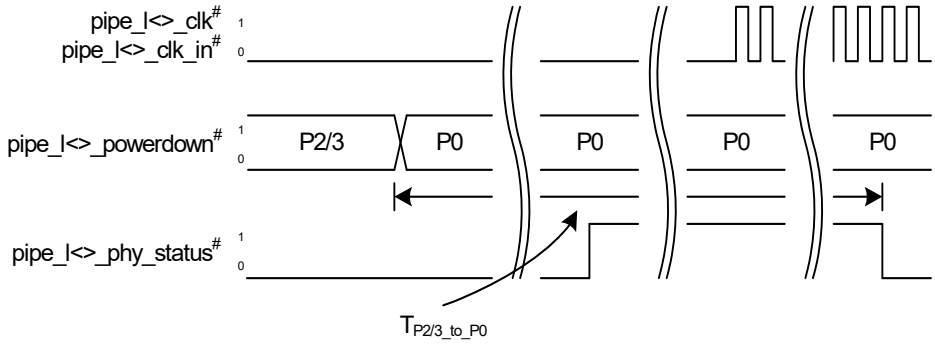

Figure 16: PIPE power state change (with PIPE clock enable)

For PCIe, this corresponds to P2 -> P0/P1 power state change. For USB, this corresponds to P3 -> P0/P2 power state change.

10.4.1.1 PCIe L1 Sub-state Entry/Exit Timing Diagrams

The PCIe L1 sub-states are entered either through either the side-band interface (phy_l<>_ent_l1_x / phy_l<>_ack_l1_x) when phy_l<>_pcie_l1_ss_sel is low or using PIPE powerdown and PhyStatus signals when phy_l<>_pcie_l1_ss_sel is high. 2 sets of signals are used for both modes: phy_l<>_rx_elec_idle_det_en and phy_l<>_tx_cmn_mode_en. There are 2 use cases (same for each mode) depending on whether the PHY is outputting a reference clock or not. When not outputting a reference clock, phy_en_refclk is tied low and not used as part of the L1.x entry and exit protocols.

A link can only use one of the L1.x entry/exit interfaces as selected with phy_l<>_pcie_l1_ss_sel. phy_l<>_pcie_l1_ss_sel is a static PHY input and can only be changed when the PHY and/or link is disabled.

10.4.1.1.1 L1.x entry (sideband signaling)

The PHY must be in the P1 power state prior to initiating L1.x entry when using sideband signaling. L1.x entry is initiated by asserting phy_l<>_ent_l1_x high.

The L1.x entry procedure is dependent upon the PHY's mode of operation based upon whether the PHY is outputting a reference clock on cmn_refclk_<p/m> or not. When not outputting a reference clock, phy_en_refclk is ignored and the input reference clock can be turned off upon assertion of phy_l<>_ack_l1_x (when all other links are also powered down). When outputting a reference clock, phy_en_refclk cannot be de-asserted until after phy_l<>_ack_l1_x is asserted high (when all other links are also powered down). Upon assertion of phy_l<>_ack_l1_x, the output reference clock can be turned off by de-assertion low of phy_en_refclk. After de_assertion of phy_en_refclk, the PHY reference clock input (i.e. pma_cmn_refclk_int) can be turned off only upon the de-assertion low of phy_refclk_reqd.

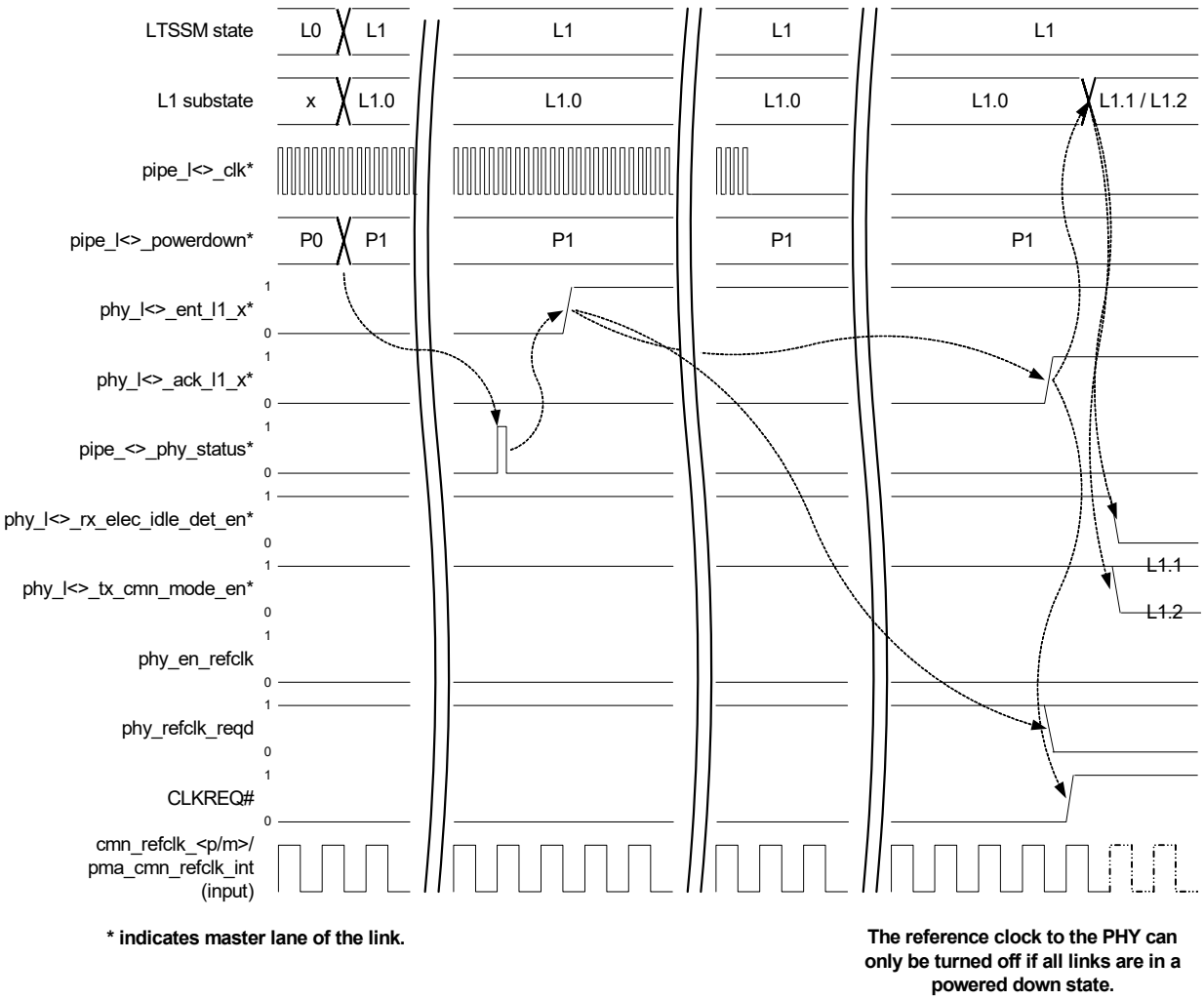

Figure 17: PCIe L1.1 entry sideband timing (without reference clock output)

For L1.1, phy_l<>_tx_cmn_mode_en is left asserted high. For L1.2, phy_l<>_tx_cmn_mode_en is de-asserted upon entering L1.2 Idle sub-state.

The input reference clock can only be turned off if all links are powered down (i.e. disabled, in PCIe P2, USB P3, PCIe L1.x, etc.). This can be determined based on each link's power state or based on the state of phy_refclk_reqd. When phy_refclk_reqd is high, the input reference clock must be left running. Upon de-assertion, the input reference clock may be turned off.

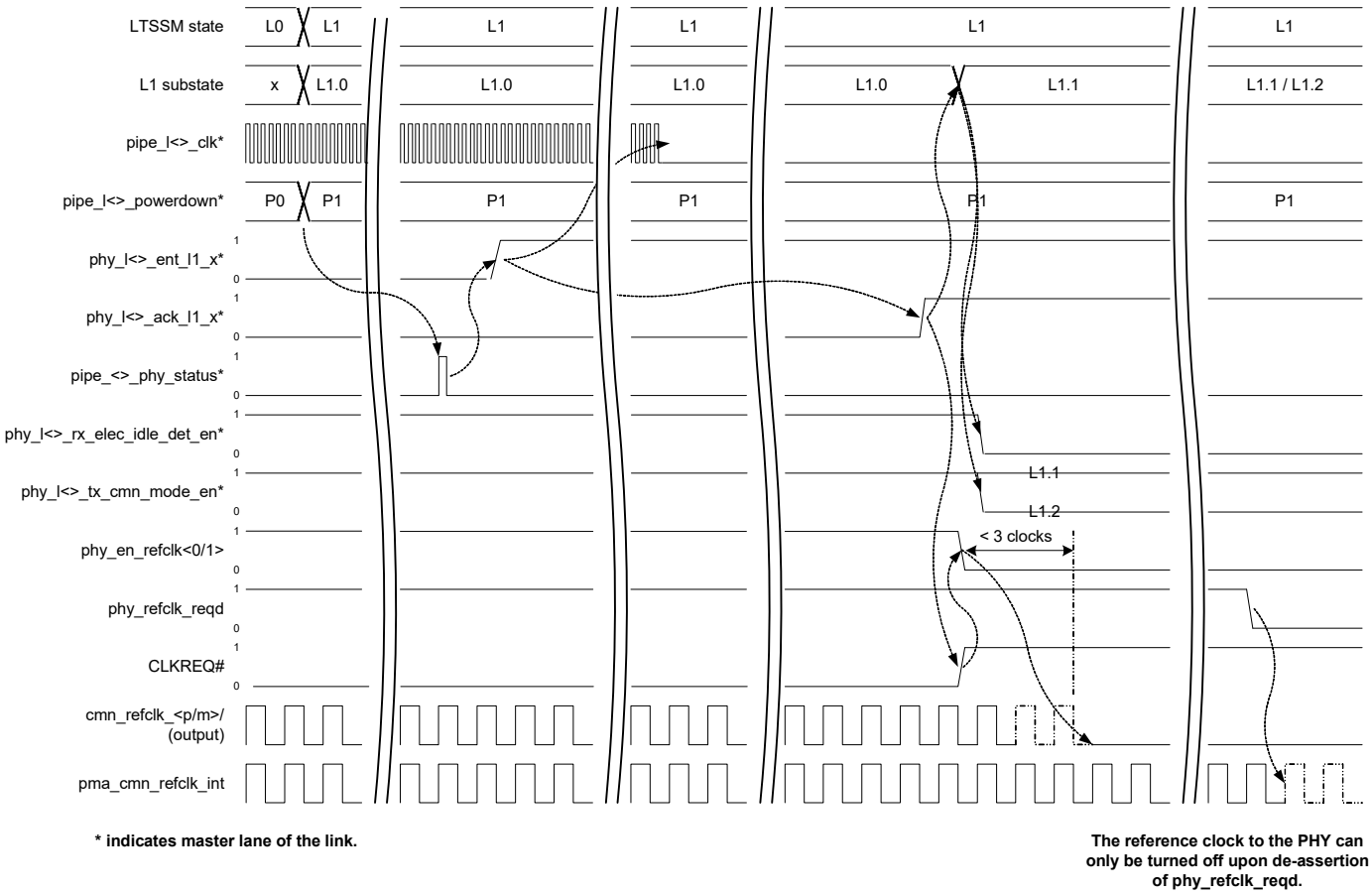

Figure 18: L1.x entry sideband timing (with reference clock output)

For this case, phy_en_refclk is used in conjunction with phy_l<>_ent_l1_x / phy_l<>_ack_l1_x. phy_en_refclk has 2 functions: (1) it signals when to gate the output reference clock and (2) to complete the powerdown of the PHY. phy_en_refclk shall not be de-asserted unless all links are in a powered down state. The input reference clock shall not be turned off until phy_refclk_reqd de-asserts low.

10.4.1.1.2 L1.x entry (PIPE-based signaling)

The PHY can be in either the P0 or P1 power states prior to initiating L1.x entry when using PIPE-based signaling. L1.x entry is initiated by setting pipe_l<>_powerdown to P1.x.

The PIPE-based L1.x entry procedure has the same dependency upon whether outputting a reference clock as sideband signaling mode. When not outputting a reference clock, phy_en_refclk is ignored and the input reference clock can be turned off upon assertion and de-assertion of pipe_l<>_phy_status (when all other links are also powered down). When outputting a reference clock, phy_en_refclk cannot be de-asserted until after assertion and de-assertion of pipe_l<>_phy_status (when all other links are also powered down). After de_assertion of phy_en_refclk, the PHY reference clock input (i.e. pma_cmn_refclk_int) can be turned off only upon the de-assertion low of phy_refclk_reqd.

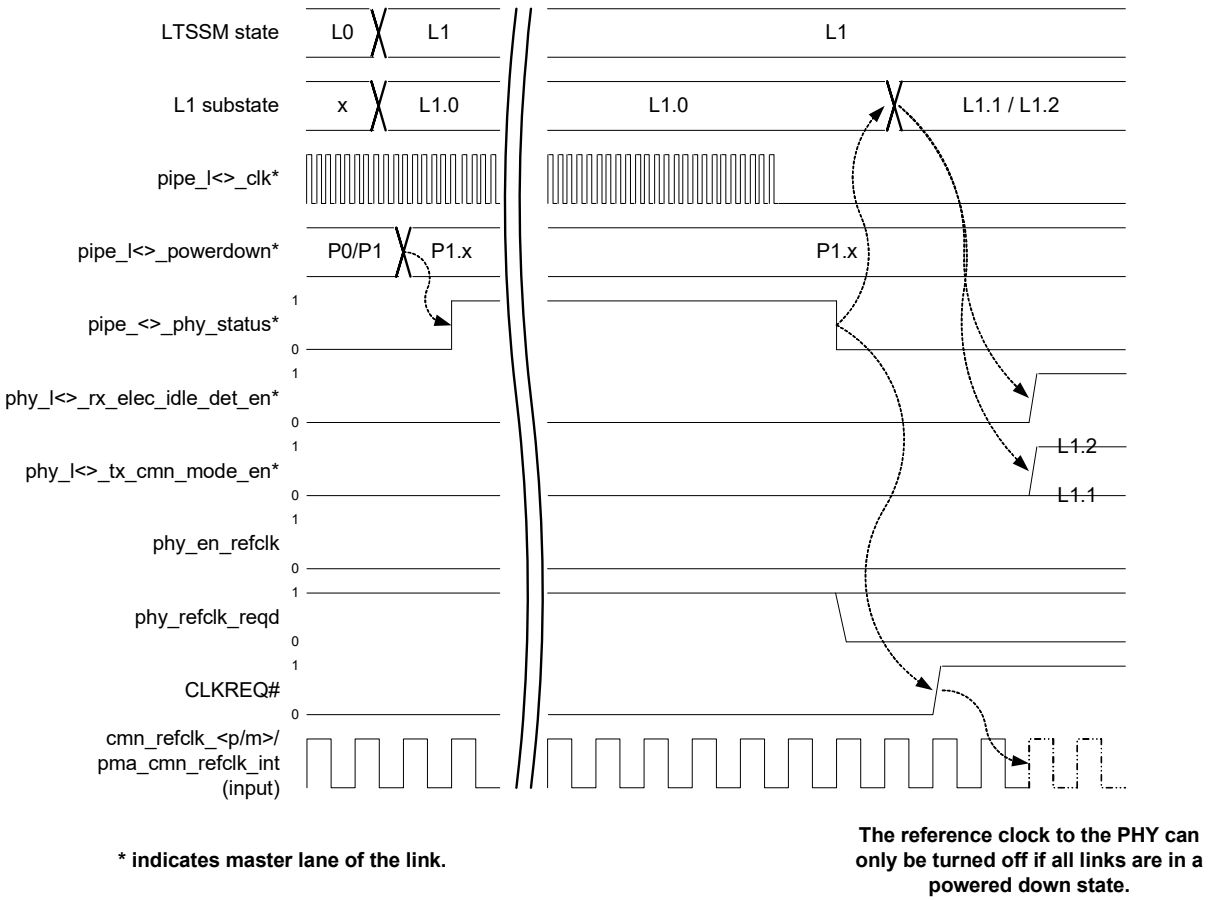

Figure 19: PCIe L1.1 entry PIPE timing (without reference clock output)

For L1.1, phy_l<>_tx_cmn_mode_en is left de-asserted low. For L1.2, phy_l<>_tx_cmn_mode_en is asserted high upon entering L1.2 Idle sub-state.

The input reference clock can only be turned off if all links are powered down (i.e. disabled, in PCIe P2, USB P3, PCIe L1.x, etc.). This can be determined based on each link's power state or based on the state of phy_refclk_reqd. When phy_refclk_reqd is high, the input reference clock must be left running. Upon de-assertion, the input reference clock may be turned off.

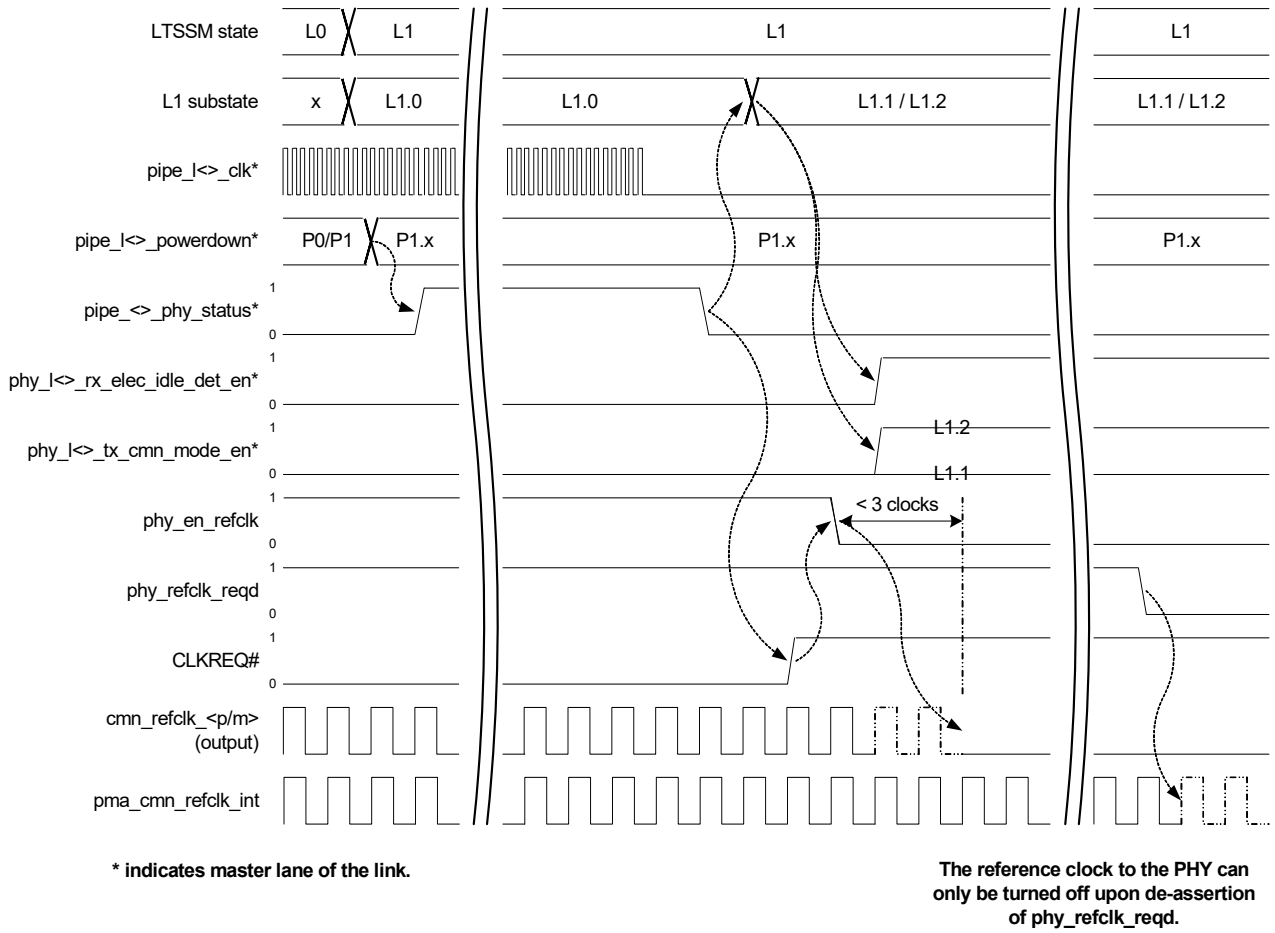

Figure 20: L1.x entry PIPE timing (with reference clock output)

For this case, phy_en_refclk is used in conjunction with pipe_l<>_powerdown and pipe_l<>_phy_status. phy_en_refclk has 2 functions: (1) it signals when to gate the output reference clock and (2) to complete the powerdown of the PHY. phy_en_refclk shall not be de-asserted unless all links are in a powered down state. The input reference clock shall not be turned off until phy_refclk_reqd de-asserts low.

10.4.1.1.3 L1.x exit (sideband signaling)

Exit from L1.x when using sideband signaling is initiated by the de-assertion low of phy_l<>_ent_l1_x. The only difference between L1.1 and L1.2 exit is that phy_l<>_tx_cmn_mode_en must be re-asserted high for L1.2 and not for L1.1.

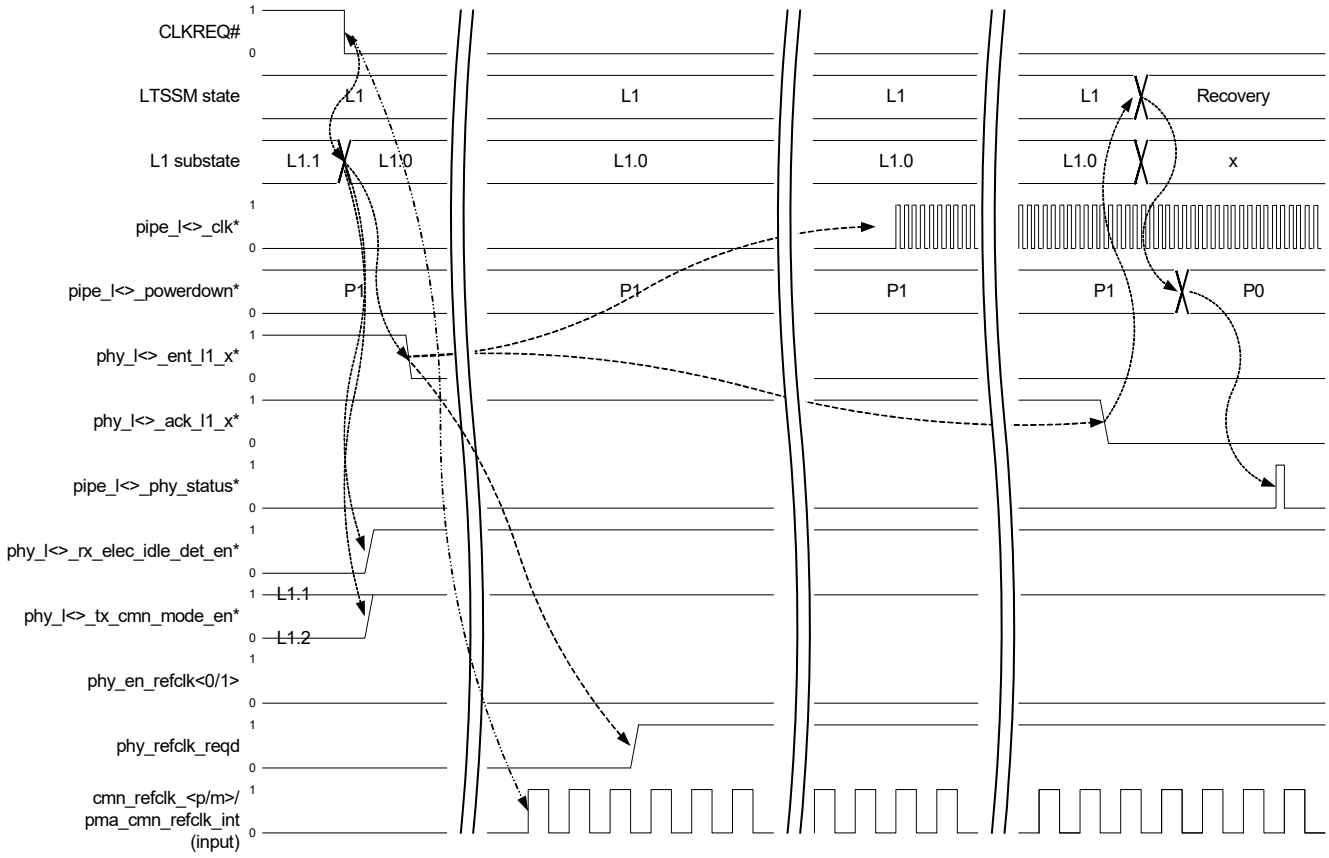

*** indicates master lane of the link.**

Figure 21: PCIe L1.x exit sideband timing (without reference clock output)

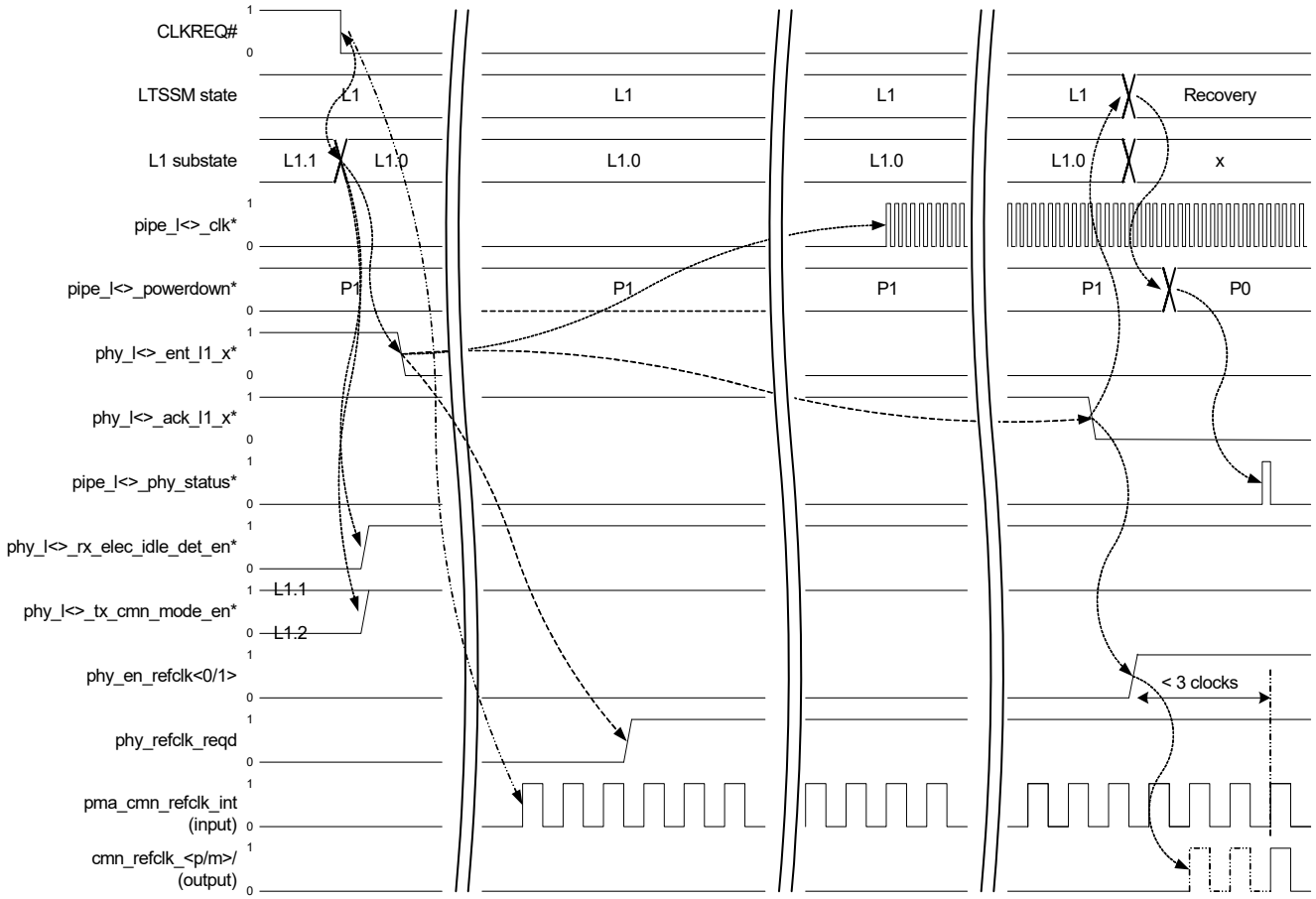

*** indicates master lane of the link.**

Figure 22: PCIe L1.x exit sideband timing (with reference clock output)

In this case, phy_en_refclk shall not be asserted high until phy_l<>_ack_l1_x is de-asserted low.

10.4.1.1.4 L1.x exit (PIPE-based signaling)

Exit from L1.x when using PIPE-based signaling is initiated by the changing pipe_l<>_powedown from P1.x to P1. The only supports exit from P1.x to the P1 power state. Exit directly to P0 is not supported. The only difference between L1.1 and L1.2 exit is that phy_l<>_tx_cmn_mode_en must be re-asserted high for L1.2 and not for L1.1.

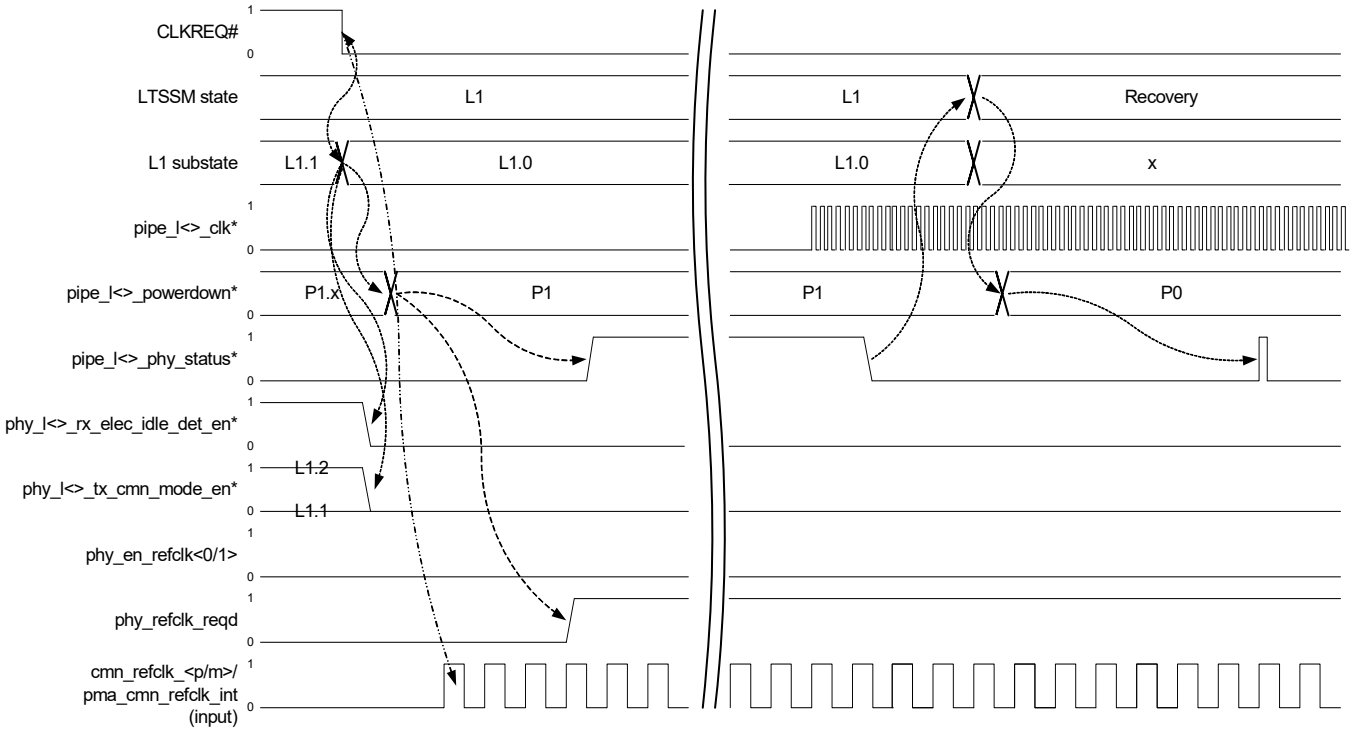

*** indicates master lane of the link.**

Figure 23: PCIe L1.x exit PIPE timing (without reference clock output)

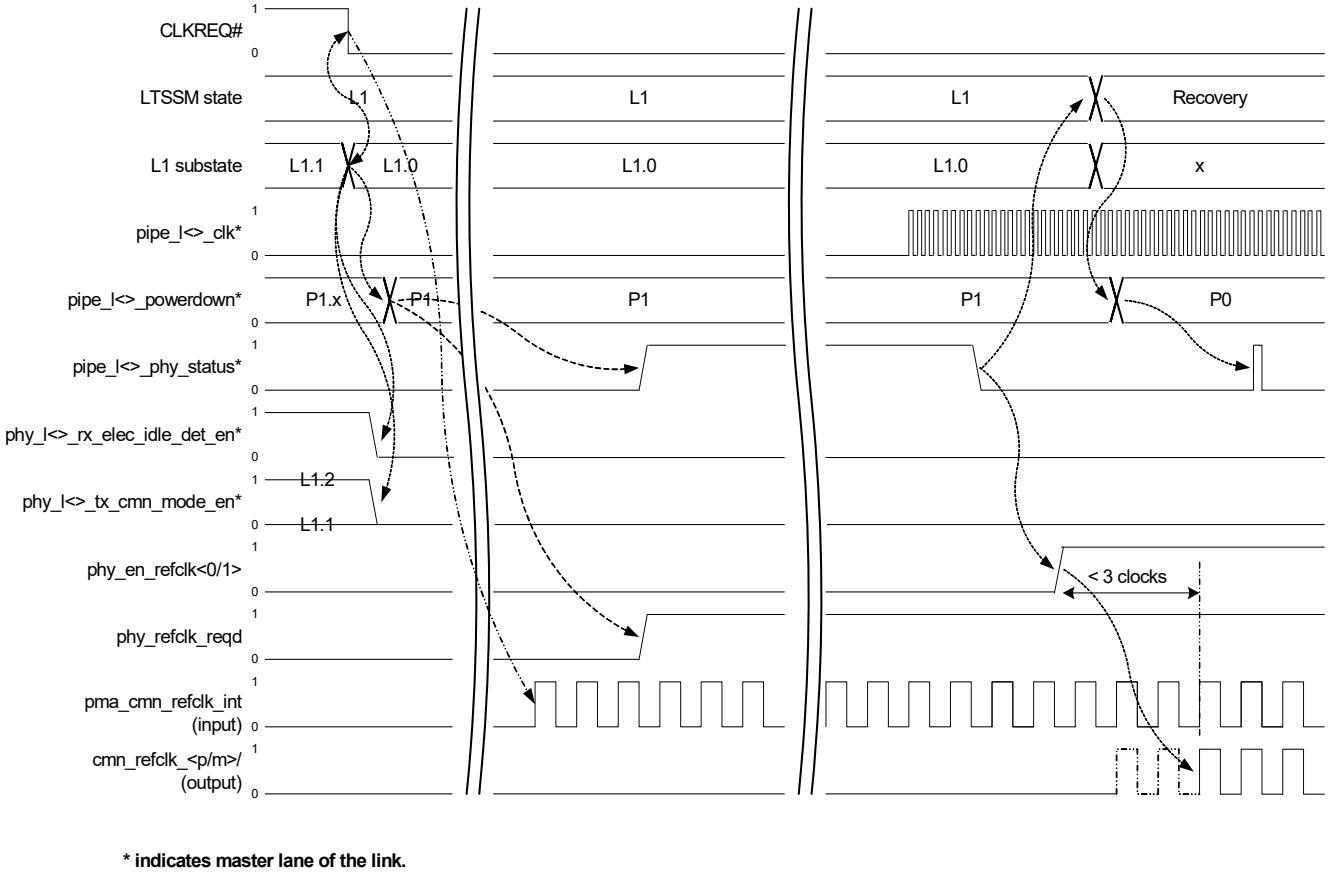

Figure 24: PCIe L1.x exit PIPE timing (with reference clock output)

In this case, phy_en_refclk shall not be asserted high until phy_l<>_ack_l1_x is de-asserted low.

10.4.2 Raw SerDes

A Raw SerDes link's power state is selected through the pma_xcvr_power_state_req_ln_* and pma_xcvr_power_state_ack_ln_* pins. (PIPE links use the pipe_l*_powerdown pins.) The following timing diagrams describe the procedure for changing the power state of an Ethernet link.

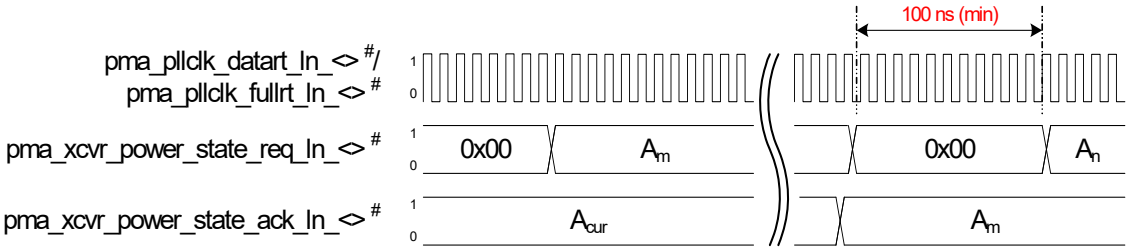

Figure 25: Raw SerDes interface link A0/A1/A2 power state change timing

When pma_xcvr_power_state_ack_ln_* == pma_xcvr_power_state_req_ln_*, the link is in the new power state. Return pma_xcvr_power_state_req_ln_* to 0x00 upon the link being in the new power state. A new power state change request cannot be signaled for at least 100 nsec after pma_xcvr_power_state_req_ln_* == 0x00.

For multi-lane links, pma_xcvr_power_state_ack_ln_<> may go to zero prior to reflecting the 'next power state' value. This is due to cases where not all of the lanes in the multi-lane link complete the power state change on the same clock cycle.

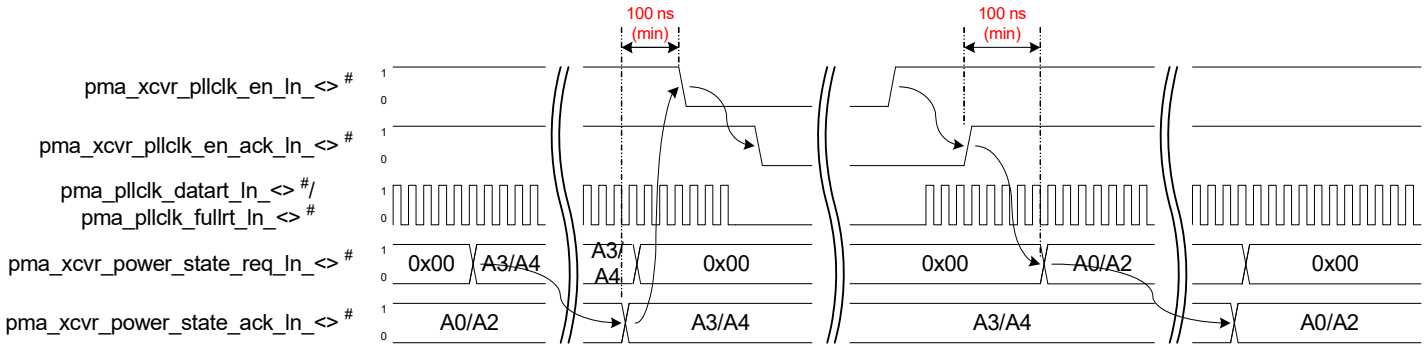

Figure 26: Raw SerDes interface link A3/A4 power state change timing

When changing the power state between A0, A1 and A2, the datarate and fullrate clocks are not gated. However, they are gated after entering A3/A4 and enabled prior to exiting A3/A4. The A3 power state can only be entered from the A0 or A2 power states and the A4 power state can only be entered from the A2 power state.

There is a minimum 100 nsec time on A3/A4 entry between pma_power_state_ack_ln_* == A3/A4 and de-assertion of pma_xcvr_pllclk_en_ln_*. And for A3/A4 exit, there is a minimum 100 nsec time between pma_xcvr_pllclk_en_ack_ln_* assertion and pma_xcvr_power_state_req_ln_* == A0/A2.

10.4.3 PHY/PMA common logic powerdown

When all links are in a power down state (i.e. Raw SerDes A3 or PIPE PCIe P2/L1.x or PIPE USB P3 or powerdown disabled), the PHY/PMA common logic (including PLLs) will be automatically suspended and placed in its lowest powered state. Upon any link exiting from one of these power down states, the PMA common is resumed.

10.5 Data Rate change

10.5.1 PIPE interface

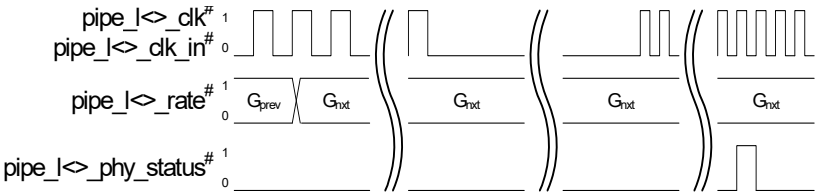

Figure 27: PIPE data rate change timing

10.5.2 Raw SerDes interface

The following timing diagram shows the steps required to change a link's data rate using the Raw SerDes interface:

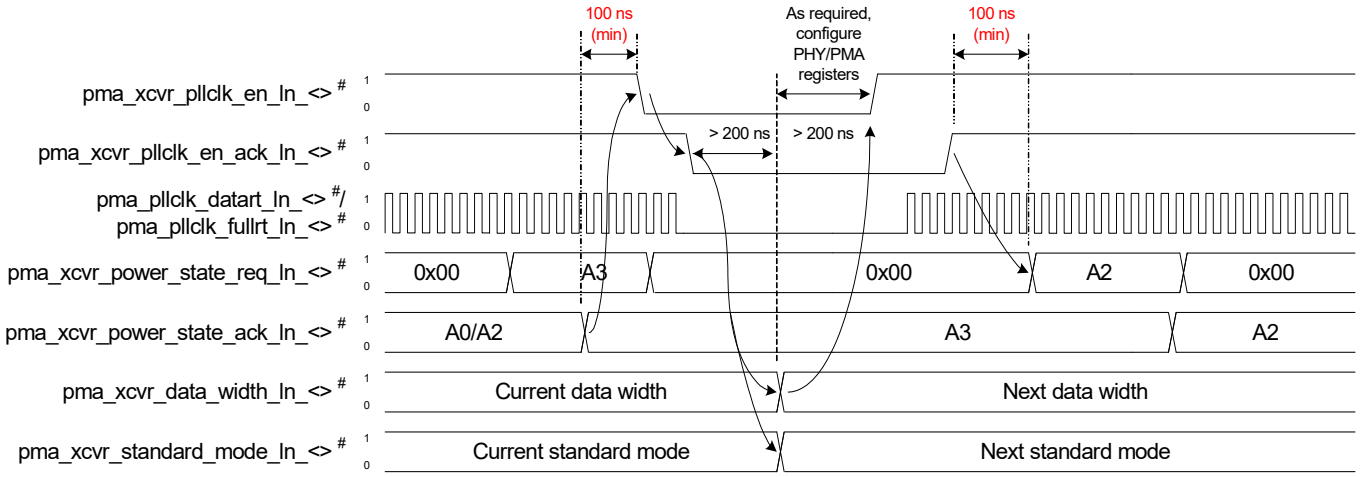

Figure 28: Raw SerDes interface data rate change

Note: The link must be placed into the A3 power state and the data rate clock disabled prior to changing the pma_xcvr_-data_width_ln_*/pma_xcvr_standard_mode_ln_* signals for the new data rate. Upon changing pma_xcvr_standard_-mode_ln_<>/pma_xcvr_data_width_ln_<>, wait at least 200 nsec before asserting pma_xcvr_pllclk_en_ln_* and exiting A3 power state.

If PLL reconfiguration is required for the new data rate, perform the following steps:

- Disable the associated PLL by clearing PHY_PMA_PLL_RAW_CTRL[0] for PLL0 and bit [1] for PLL1.
- Wait for the associated PLL to be disabled. For PLL0, wait for PHY_PMA_CMN_CTRL2[2] == 1. For PLL1, wait for PHY_PMA_CMN_CTRL2[3] == 1.
- Reconfigure PMA registers for associated PLL for the selected data rate.
- Re-enable the associated PLL by setting PHY_PMA_PLL_RAW_CTRL[0] or [1].
- Wait for the associated PLL to be ready for operation. For PLL0, wait for PHY_PMA_CMN_CTRL2[0] == 1. For PLL1, wait for PHY_PMA_CMN_CTRL2[1] == 1.
- Re-enable the link as described by above timing diagram (i.e. assert pma_xcvr_pllclk_en_ln_<> high, wait for pma_x-cvr_pllclk_en_ack_ln_<> == 1 and change link power state to A2). The next power state after a data rate change is A2. The power state can be subsequently change to A0 as required.

10.6 Changing the mode of operation when using the Raw Ser-Des interface

To change a Raw SerDes mode of operation, the link must be placed in reset:

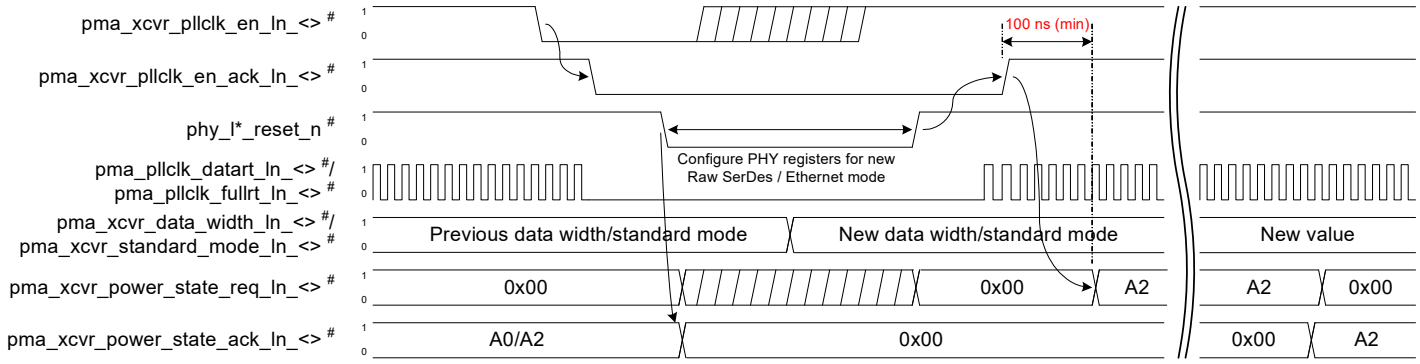

Figure 29: Raw SerDes interface mode of operation change

Of note:

- The link's datarate and fullrate clocks shall be gated prior to asserting link reset. Upon de-assertion of pma_xcvr_pll-clk_en_ack_ln_*, phy_l*_reset_n may be asserted low.
- Assert pma_xcvr_pllclk_en_ln_* high prior to de-asserting phy_l*_reset_n.
- While the link is in reset, write the PHY/PMA registers as required to select the new Raw SerDes / Ethernet mode. pma_xcvr_data_width_ln_* and pma_xcvr_standard_mode_ln_* must also be set for the selected mode prior to the release of reset.
- After reset release, upon pma_xcvr_power_state_ack_ln_* == pma_xcvr_power_state_req_ln_*, the link will be operating in the new Raw SerDes / Ethernet mode.

10.7 Transmit Data Path Timing Diagrams

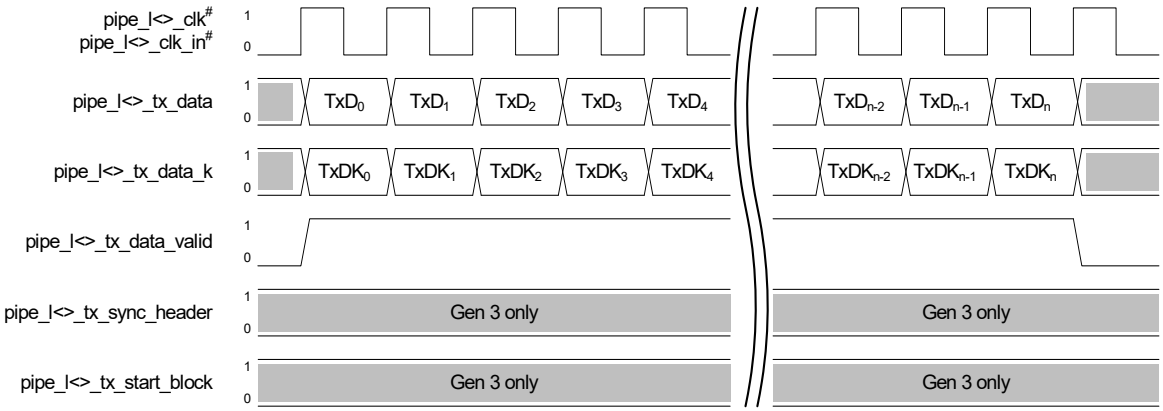

Figure 30: PIPE PCIe Gen1/2 and USB3.2 Gen 1 transmit data path

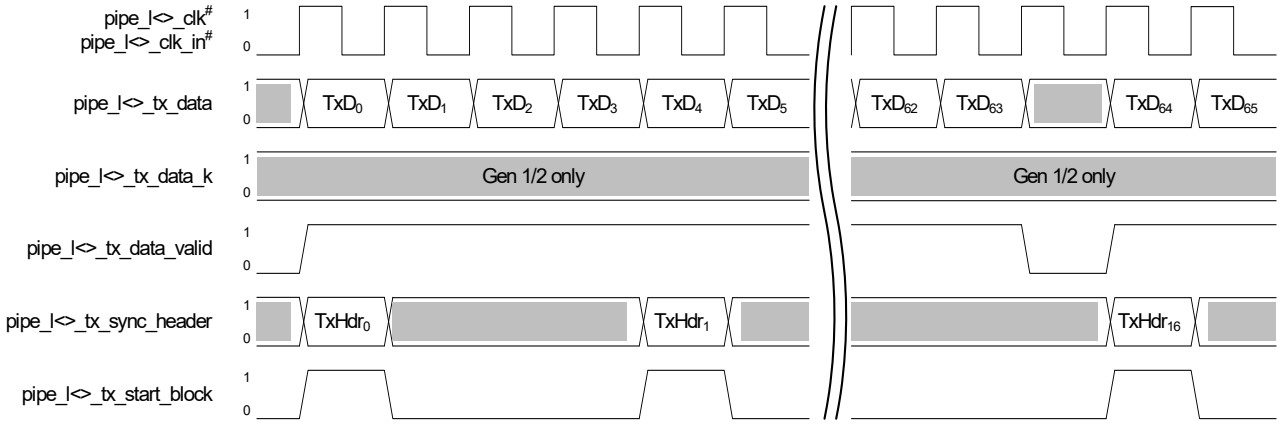

Figure 31: PIPE PCIe Gen3 and USB3.2 Gen 2 transmit data path

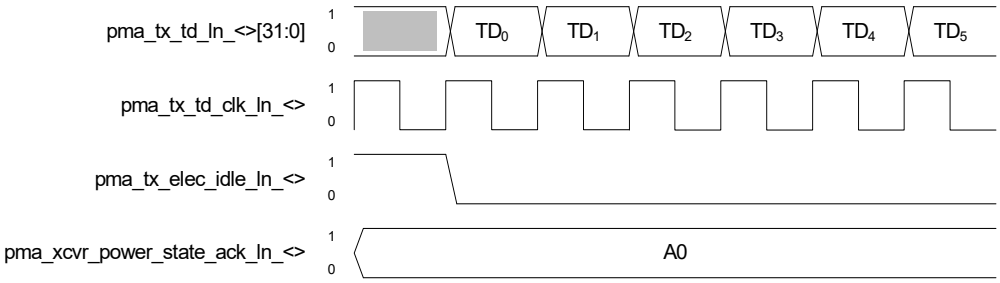

Figure 32: Raw SerDes transmit data path

10.8 Receiver detection

The receiver detection interface is used to perform a receiver detection sequence, which provides indication of whether a receiver is connected to the transmitter for the lane (for those standards that support, such as PCIe and USB). Note: The selected reference clock to the PMA must be running to perform a receiver detection operation regardless of the mode.

10.8.1 PIPE (PCIe or USB)

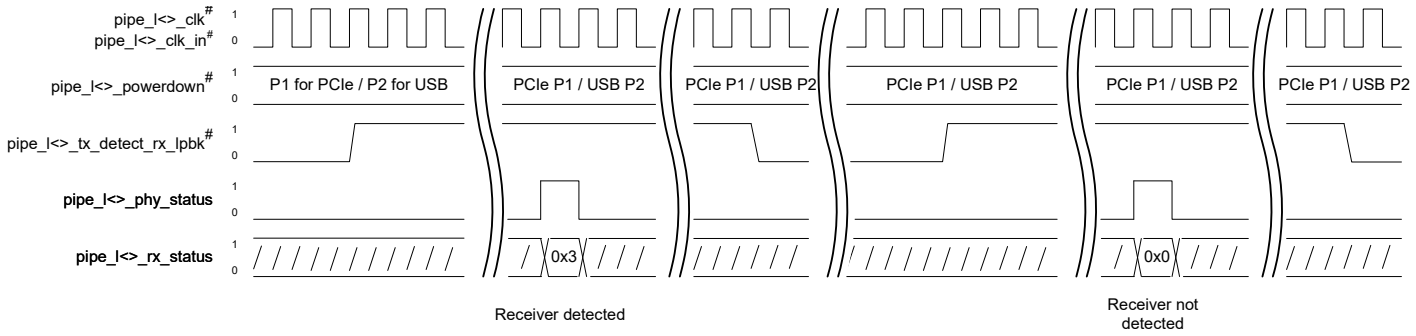

Figure 33: PIPE PCIe and USB (P2) recevier detection timing

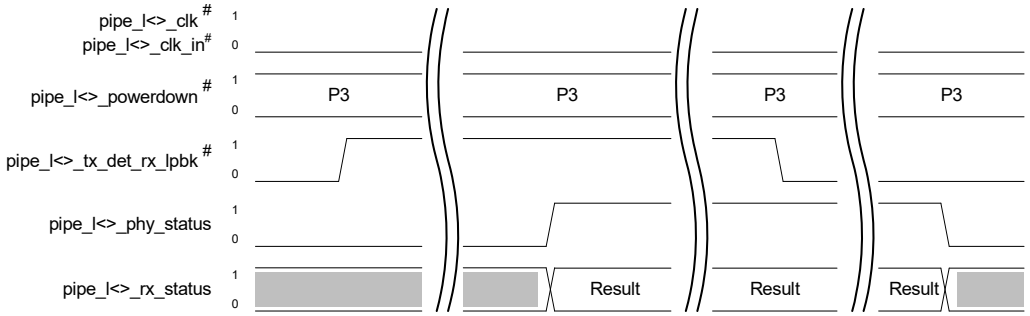

Figure 34: PIPE USB (P3) recevier detection timing

10.8.2 Raw SerDes

For the Raw SerDes receiver detection inteface, a full asynchronous handshake protocol between the pma_tx_rcv_detect_en_ln_<> PHY input and pma_tx_rcv_detect_done_ln_<> PHY output is used to initiate and signal completion of the receiver detect operation. The pma_tx_rcv_detected_ln_<> PHY output is valid upon assertion of pma_tx_rcv_detect_done_ln_<> and indicates whether a receiver was detected or not (1 = detected, 0 = no receiver detected).

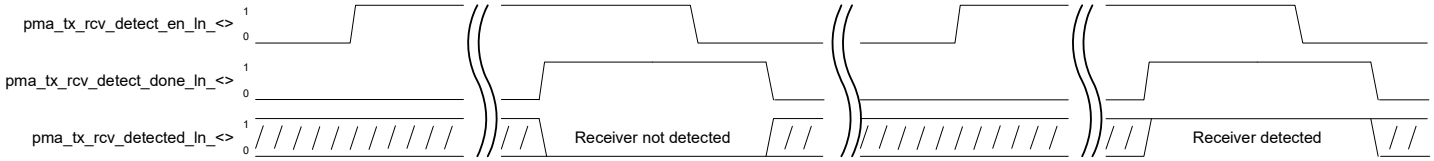

Figure 35: Raw SerDes recevier detection timing

- pma_tx_rcv_detect_en_ln_<> shall not be asserted high while pma_tx_rcv_detect_done_ln_<> is high.
- After asserting pma_tx_rcv_detect_en_ln_<> high, it shall not be de-asserted low unitl pma_tx_rcv_detect_done_ln_<> has been asserted high.

10.9 Transmit deemphasis

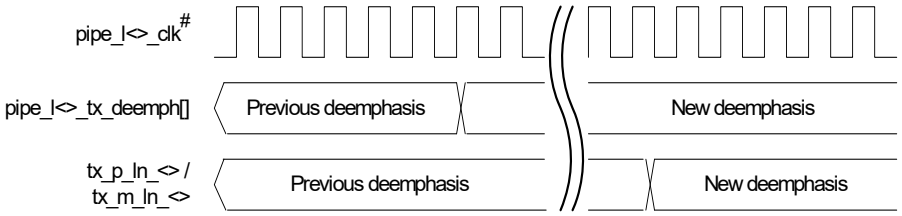

Figure 36: PIPE mode Tx deemphasis change timing

For all PIPE rates except USB3 Gen 2, pipe_l<>_tx_deemph[] drives the associated lane's PMA tx_deemphasis_ln_<> pins directly.

For USB3 Gen2, pipe_l<>_tx_deemph[1:0] is used to map to 1 of the 4 required de-emphasis settings: 0b01 = with pre-shoot and de-emphasis (mission mode and compliance pattern CP15), 0b00 = with pre-shoot, but no de-emphasis (CP13), 0b10 = with de-emphasis, but no pre-shoot (CP14) and 0b11 = no pre-shoot or de-emphasis (CP16), with the default register configuration. Logic in the PCS, uses the local Tx FS value from the PMA to calculate the C_{-1}, C_0 and C_1 values to apply to the PMA based on the de-emphasis mode selected.

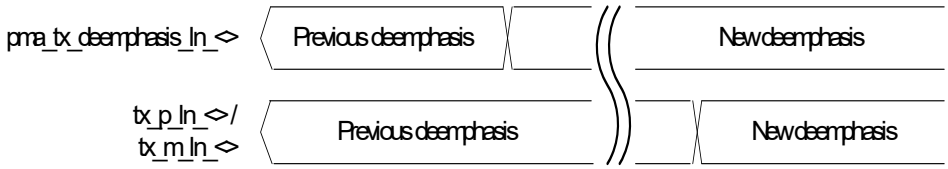

Figure 37: Raw SerDes mode Tx deemphasis change timing

In each case, the new de-emphasis setting will take effect within 128 nsec.

10.10 Receive Data Path Timing Diagrams

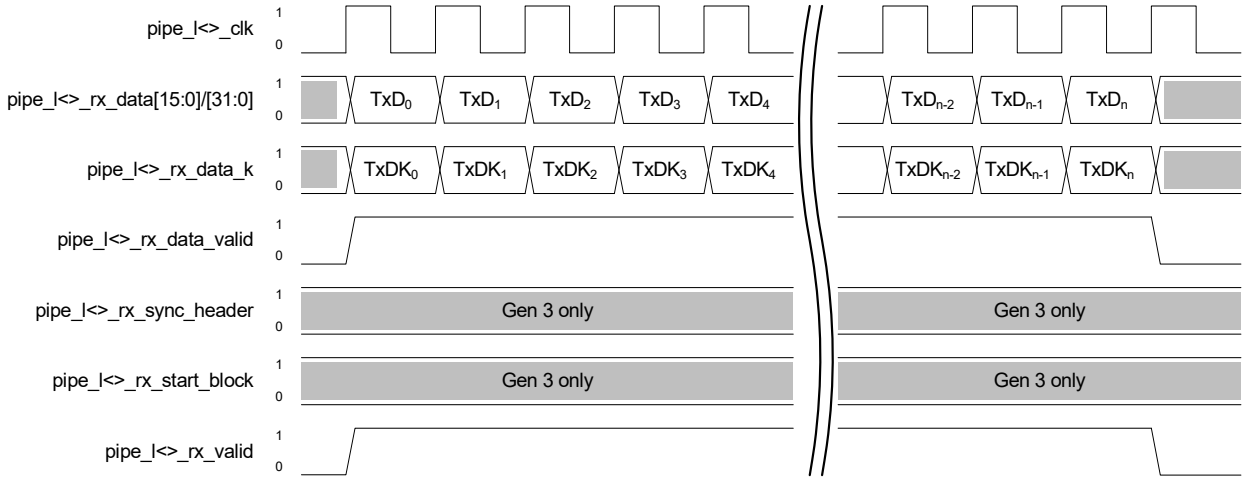

Figure 38: PIPE PCIe Gen1/2 and USB3.2 Gen 1 receive data path

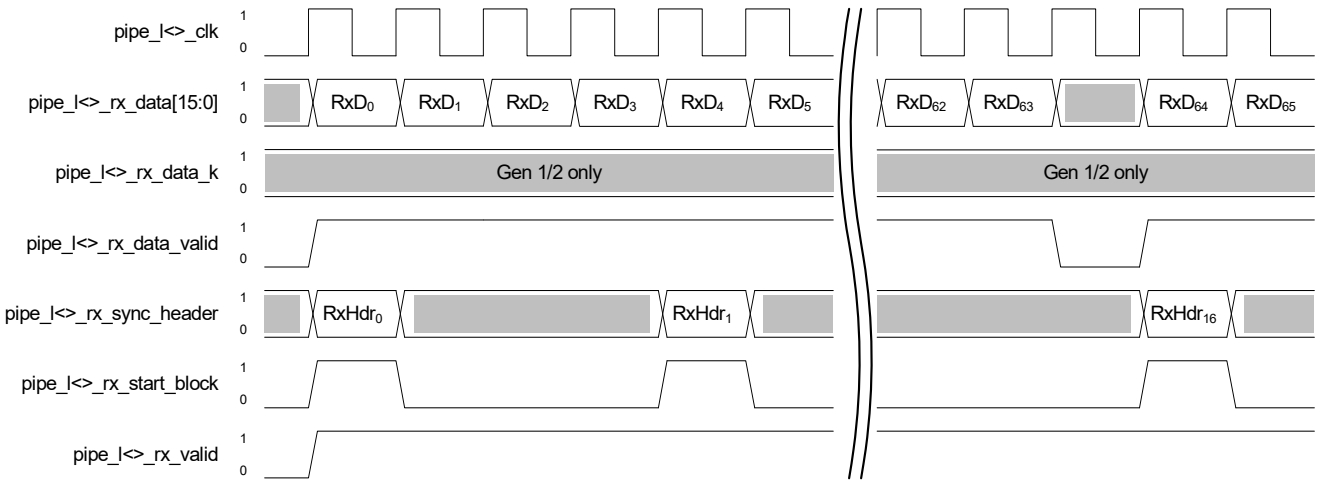

Figure 39: PIPE PCIe Gen3 and USB3.2 Gen 2 receive data path

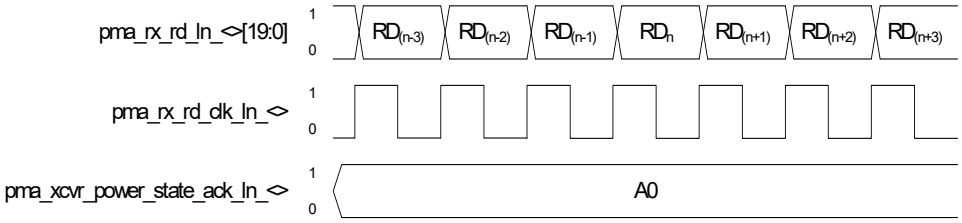

Figure 40: Raw SerDes receive data path

10.11 Transmitter Equalization Timing Diagrams

10.11.1 PIPE PCIe

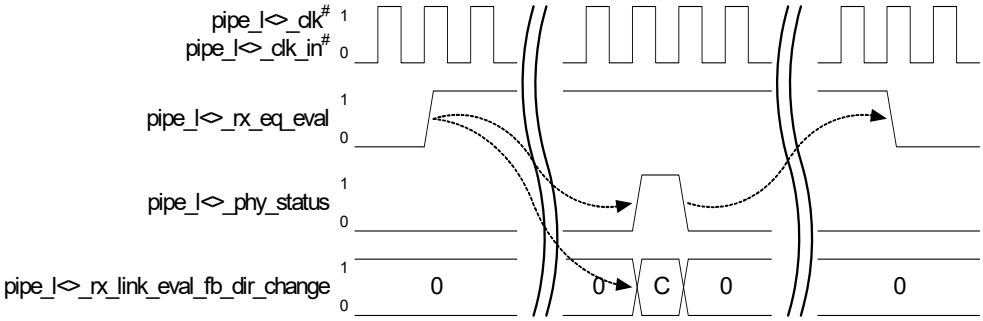

Figure 41: Receiver equalization evaluation (typical)

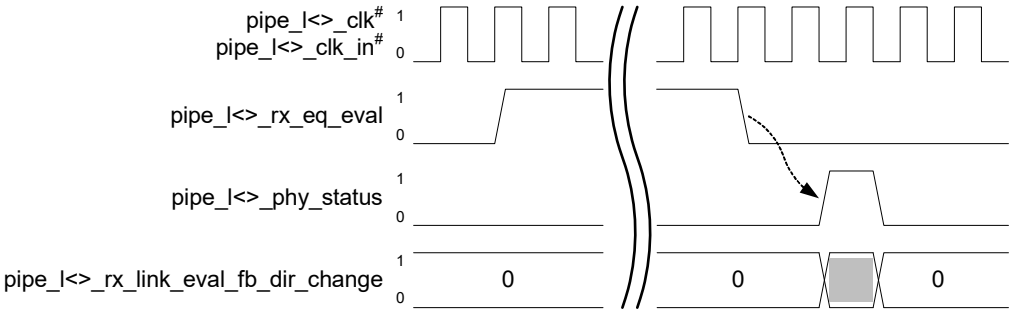

Figure 42: Receiver equalization evaluation (aborted)

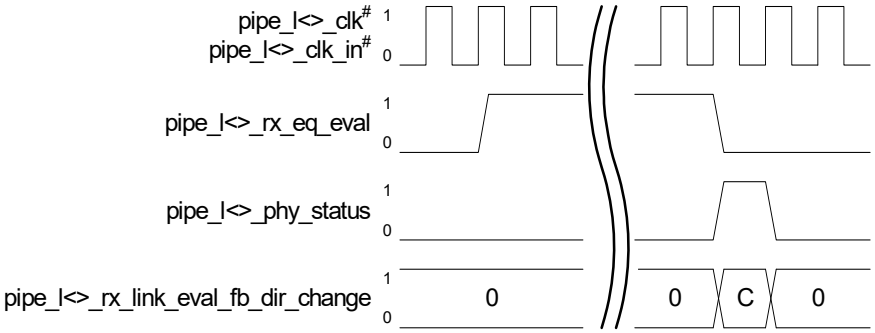

Figure 43: Receiver equalization evaluation (aborted with race condition)

Note: In each of the above cases, a new receiver equalization evaluation shall not be initiated until pipe_l<> phy_status has been asserted for the previous evaluation (whether aborted or not).

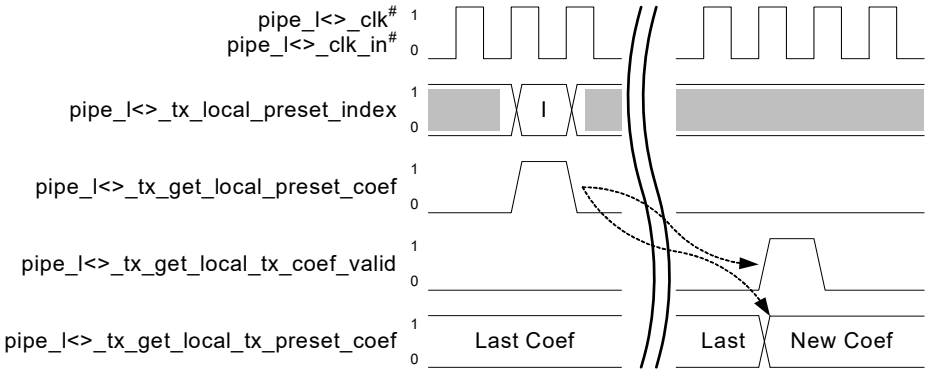

Figure 44: Get local transmit preset coefficients

10.11.2 Raw SerDes

The Rx equalization evaluation interface is used to ‘evaluate’ the far-end transmitter’s de-emphasis settings as part of transmitter equalization. For the Raw SerDes interface a full asynchronous handshake protocol between pma_rx-_eq_eval_ln_<> PHY input pin and pma_rx_eq_eval_status_ln_<> PHY output pin is used to initiate and signal completion of the operation. pma_rx_eq_eval_complete_ln_<> and pma_rx_link_eval_fb_dir_change_ln_<>[] PHY outputs are valid upon the assertion (high) of pma_rx_eq_eval_status_ln_<>. pma_rx_eq_eval_complete_ln_<> indicates whether the evaluation has completed (when high) or should be continued (when low). pma_rx_link_eval_fb_dir_change_ln_<> provides the evaluation result.

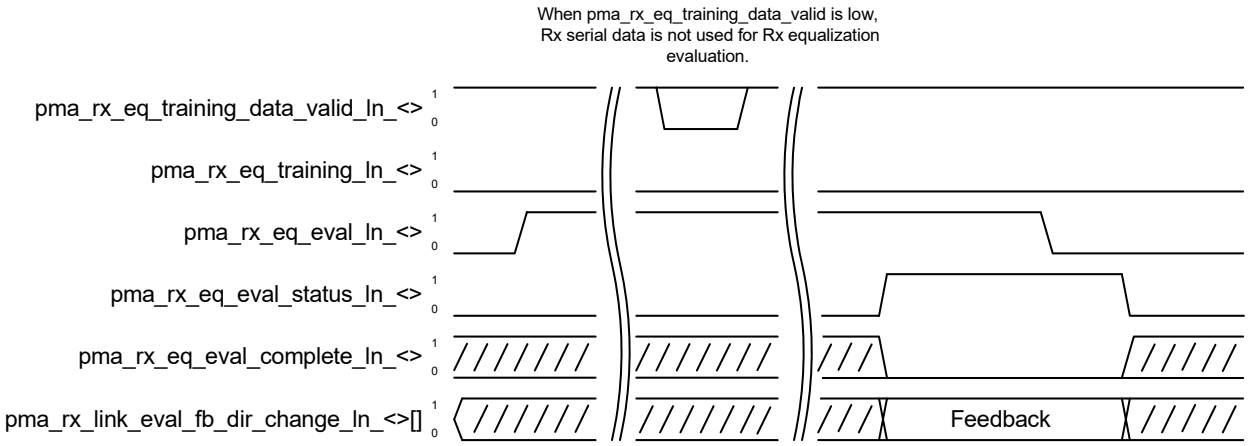

Figure 45: Raw SerDes Rx equalization evaluation (not complete)

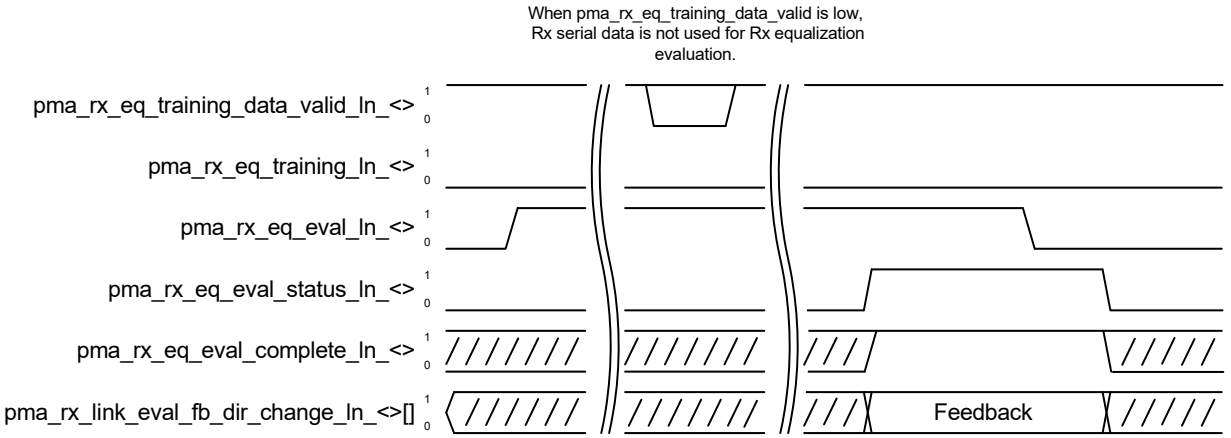

Figure 46: Raw SerDes Rx equalization evaluation (complete)

As shown in Figure 45 and Figure 46, pma_rx_eq_training_data_valid_ln_<> can be de-asserted low during an evaluation. This prevents the incoming serial data from being used for the evaluation.

- pma_rx_eq_eval_ln_<> shall not be asserted high while rx_eq_eval_status_ln_<> is asserted high.
- After asserting pma_rx_eq_eval_ln_<> high, it shall not be de-asserted low until pma_rx_eq_eval_status_ln_<> has been asserted high.

The Get Tx coefficient interface provides access to the PHY's preset transmitter coefficients. A full asynchronous handshake protocol is used between the pma_tx_get_local_preset_coef_ln_<> PHY input pins and the pma_tx_local_tx_coef_valid_ln_<> PHY output pin to initiate and signal completion of the get transmitter coefficient operation. When performing a Get Preset Coefficient, pma_tx_local_preset_index_ln_<>[] provides the coefficient preset value. pma_tx_local_tx_preset_coef_ln_<>[] is valid with the preset transmitter coefficient upon assertion (high) of pma_tx_local_tx_coef_valid_ln_<>.

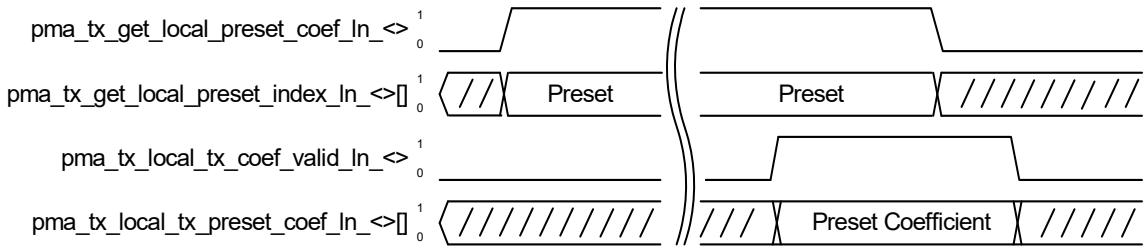

Figure 47: Raw SerDes Get Preset transmitter coefficient

- pma_tx_get_local_preset_coef_ln_<> shall not be asserted high while pma_tx_local_tx_coef_valid_ln_<> is asserted high.
- After asserting pma_tx_get_local_preset_coef_ln_<> high, it shall not be de-asserted low until pma_tx_local_tx_coef_valid_ln_<> has been asserted high.
- When performing a Get Preset Coefficient operation, pma_tx_local_preset_index_ln_<> shall remain valid while pma_tx_get_local_preset_coef_ln_<> is asserted high.

10.12 Disabling Unused Lane(s) in a multi-lane PCIe link

As defined in chapter 9 of the PIPE specification, a lane(s) is disabled by asserting pipe_l{nn:00}_tx_elec_idle and pipe_l{nn:00}_tx_compliance for the selected lane(s). This method can be used in any power state where PIPE clock is active. Recovery of a disabled lane(s) requires reseting the link (i.e. by asserting phy_l*_reset_n low for the link) and performing a normal link startup. For further description, please refer to the PIPE specification.

10.13 External reference clock active detection

The PHY supports detection of whether an external reference clock applied to the cmn_refclk_<p/m> pins is active or not. The logic supports 2 modes of operation: (1) automatic at start of day and (2) manual through APB register access. A requirement for operation (including start of day) is that the apb_pclk (between 10 and 200 MHz) is provided for the duration of the measurement interval.

For automatic mode, drive pma_cmn_ext_refclk_detected_cfg PHY pin high. Upon de-assertion of apb_preset_n, a detection operation will automatically be performed. Depending on the frequency of apb_pclk, the detection operation takes between 125 usec (10 MHz apb_pclk) and 6 usec (200 Mhz apb_pclk). The default for this mode is to detect a 100 MHz external reference clock with an APB clock range from 10 to 200 MHz. Because of the wide range of supported apb_pclk frequencies, this makes false detection of a non-100 MHz clock signal on cmn_refclk_<p/m> possible. For a 10 MHz APB clock, the detection range is from 4.5 MHz to 100.5 MHz. For a 200 MHz APB clock, the detection range is from 90 MHz to 2 GHz. If this is a concern, manual mode can be used to narrow the detection range based on the APB clock frequency.

Figure 48 illustrates detected automatic operation while Figure 49 illustrates non-detected automatic operation.

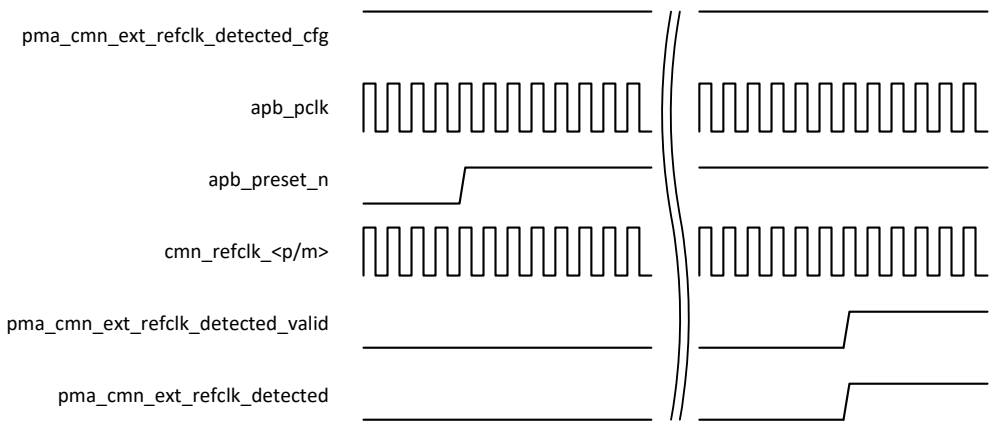

Figure 48: Detected Automatic Operation Timing Diagram

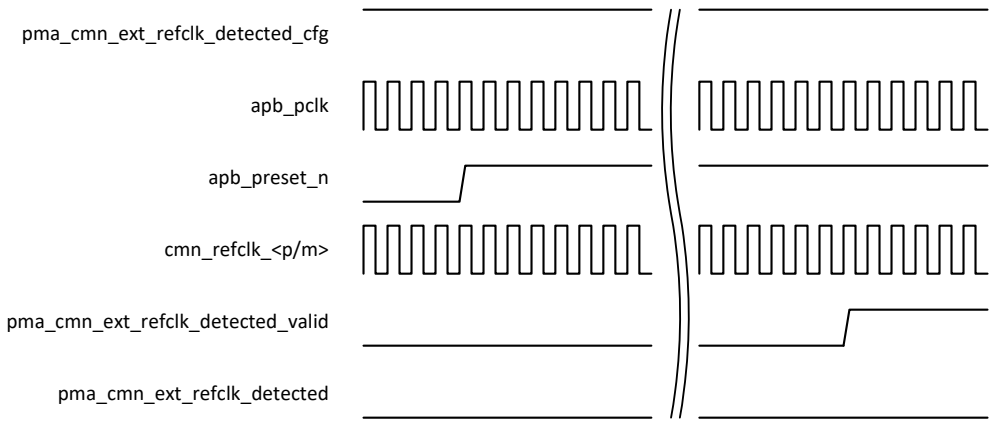

Figure 49: Non-Detected Automatic Operation Timing Diagram

In manual mode, a detection operation is initiated through an APB register write. A manual detection operation is initiated by writing 1 to PHY_REFCLK_DET_ISO_CTRL[0]. A manual detection operation can only be initiated when any previous operation (automatic or manual) has completed. The reference clock frequency detection range can be narrowed by adjusting the detection threshold registers (PHY_REFCLK_DET_THRES_LOW and PHY_REFCLK_DET_THRES_HIGH) based on the actual APB clock frequency. For example, for a 200 MHz APB clock frequency, PHY_REFCLK_DET_-THRES_HIGH can be configured with a value of 550. This would narrow the detection range to 90 to 110 MHz. This range can be narrowed further by narrowing the gap between the low and high thresholds.

Figure 50 illustrates detected manual operation while Figure 51 illustrates non-detected manual operation.

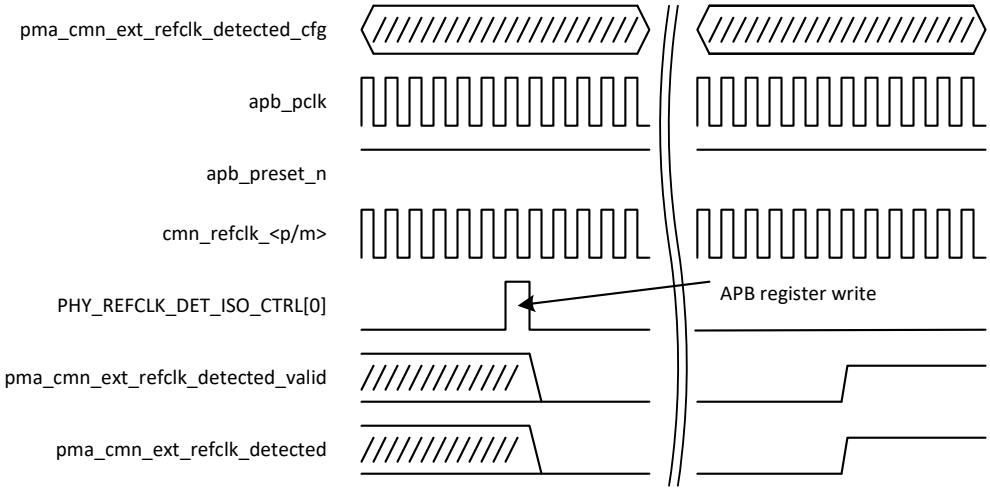

Figure 50: Detected Manual Operation Timing Diagram

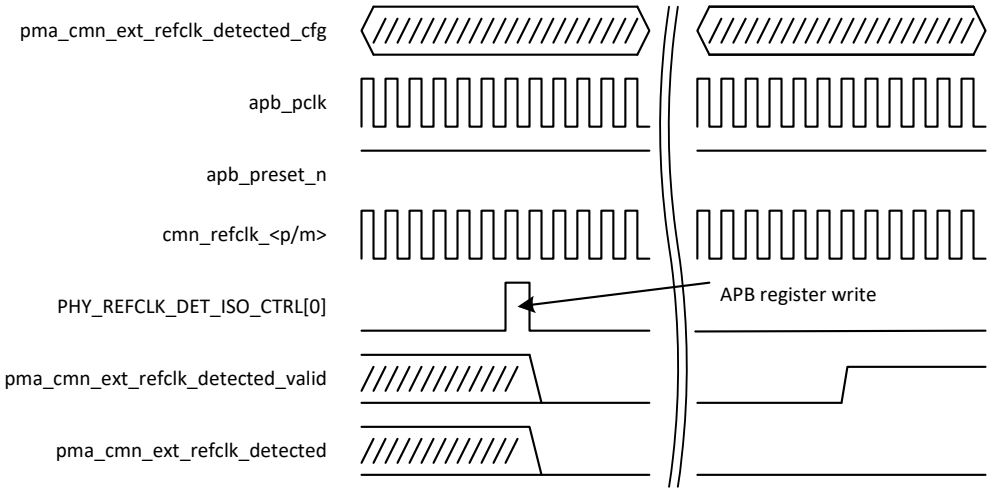

Figure 51: Non-Detected Manual Operation Timing Diagram

The detection thresholds are based on the expected number of external reference clock cycles in the measurement interval. The measurement interval is a configured number of APB clock cycles set in PHY_REFCLK_DET_INTERVAL register.

The measurement interval is set such that the corresponding reference clock count will be between the low and high thresholds upon completion of the measurement interval, when the external reference clock is active. The maximum measurement interval is based on ensuring the corresponding reference clock count will not exceed 2^16 - 1. The minimum measurement interval is set based on the desired measurement accuracy and to minimize the chance of a false positive indication due to noise on the reference clock input.

10.14 Rx Data Debug Timing Diagrams

The Rx Data Debug interface is an optional debug interface of the PHY. It provides a means to capture the receive BIST data, while monitoring for BIST errors. For a detailed description of BIST, see the PMA specification.

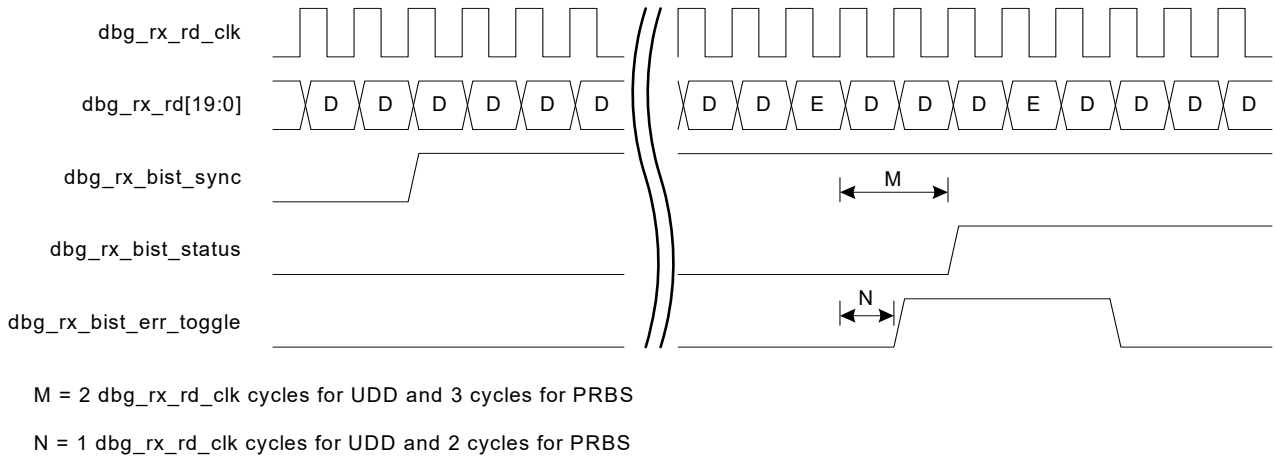

Figure 52: Rx Data Debug interface

10.14.1 Operation

Place the lane/link in the A0 power state (P0 PIPE power state), configure the desired Tx-to-Rx loopback mode and enable PMA Tx and Rx BIST. Upon assertion (high) of dbg_rx_bist_sync, the Rx BIST logic has aligned itself to the received BIST data stream (BIST error detection is disabled until dbg_rx_bist_sync is asserted). For each Rx data word received with at least 1 corrupted bit, dbg_rx_bist_err_toggle will ‘toggle’ (high-to-low or low-to-high). For the first Rx data word received with at least 1 corrupted bit, dbg_rx_bist_status will be asserted (high) and remain asserted until reset. There is a slight clock cycle offset between the corrupted Rx data word (dbg_rx_rd) and the assertion/toggle of dbg_rx_bist_status/dbg_rx-_bist_err_toggle due to pipelining in the PMA’s Rx BIST logic.

All PRBS BIST modes and UDD has a unique and repeated pattern. To determine which Rx data word bit(s) has been corrupted, one or more uncorrupted data words must be captured immediately prior to the corrupted word. These ‘good’ data words are used to synchronize to the data stream. For PRBS BIST, only 1 ‘good’ data word is required to determine the index into the PRBS pattern. For UDD, the number of ‘good’ data words depends on whether all data words in the pattern are unique or not. If all possible 16/20-bit data patterns are unique, only a single ‘good’ word is required. Otherwise, the number of data words captured must enable unique determination of position in the UDD data pattern.

10.15 PHY state change monitor operation

The PHY contains logic that monitors whether power state (signaled on the PIPE or Raw SerDes I/Fs) and data rate (signeled on the PIPE I/F only) changes complete within a specified maximum timeout.

State change failures are signaled by setting the interrupt status bit in the PHY_INTERRUPT_STS register for the master lane of the link and (when included in the PHY configuration) the assertion of phy_interrupt_ln_<> pin () for the master lane of the link. Reading PHY_INTERRUPT_STS clears the interrupt status bit and de-asserts phy_interrupt_ln_<>.

The timeout value is provided in the PHY_STATE_CHG_TIMEOUT register (bits [14:0]). The register value is the number of APB clock cycles divided by 32. For the maximum APB clock frequency (200 MHz), this provides a maximum state change timeout of 5.2 msec. The default timeout is set at 1 msec for a 200 MHz APB clock.

The state monitor for each link is enabled/disabled with PHY_INTERRUPT_STS[15]. For each link, the master lane’s enable bit must be set high to enable the internal logic to monitor the PHY state changes on that link.

The PHY's APB clock must be active and free-running when the state change monitor logic for any link is enabled.

Procedure:

- Based on the frequency of the APB clock provided to the PHY configure PHY_STATE_CHG_TIMEOUT for a 1 msec timeout value.
- Enable the state change monitor logic for the associated link by setting PHY_INTERRUPT_STS[15] to 1. It is recommended to wait until the link has completed startup and is in the active state before enabling.
- Monitor phy_interrupt_ln_<> for the master lanes of the enabled links.

11 PHY Power Control

11.1 PHY power control module

The PHY power control block provides the interface between each PIPE PCS's lane power/rate control blocks, Raw SerDes power state I/F and link enable logic and the PMA common power control interface (cmn_macro_suspend_req, cmn_macro_suspend_ack, cmn_ref_clk_disable, cmn_ref_clk_active, cmn_pll0_en, cmn_pll1_en, cmn_pll0_disabled, cmn_pll0_ready, cmn_pll0_mode_sel and cmn_ready). It performs the following functions:

- Suspends the PMA common block when all links are in PCIe P2, USB P3, PCIe L1.x, SATA or Raw SerDes A3/A4 power states or is disabled. When common is suspended, the RefClk receiver for cmn_refclk_<p/m> is disabled/powered down.
- Enables the PMA common block upon start-up and upon at least 1 PHY link requesting to exit one of these powerdown states or being enabled.
- Mimics PMA cmn_ready, cmn_macro_suspend_ack and cmn_refclk_active to the PCS lanes, so that an individual link can signal entry and exit from these power down states independent of other links.
- Disables PLL1 when the PHY is configured such that all lanes will operate on PLL0 only.
- When the PHY is configured as a single PCIe link with all PCIe rates driven by PLL0, controls the PLL mode (cmn_pll0_mode_sel) based on the selected rate. The mode is set to 0 for PCIe Gen1/2 and set to 1 for PCIe Gen3. The logic controls disabling PLL0, toggling the mode and re-enabling PLL0.
- Provides a signal upon exiting PMA suspend that is asserted high for a configurable number of RefClk cycles. This signal is used to force PIPE RxElecIdle high for those lanes that are exiting the PCIe L1.x power state until the PMAs RxSignalDetect logic has powered back up.

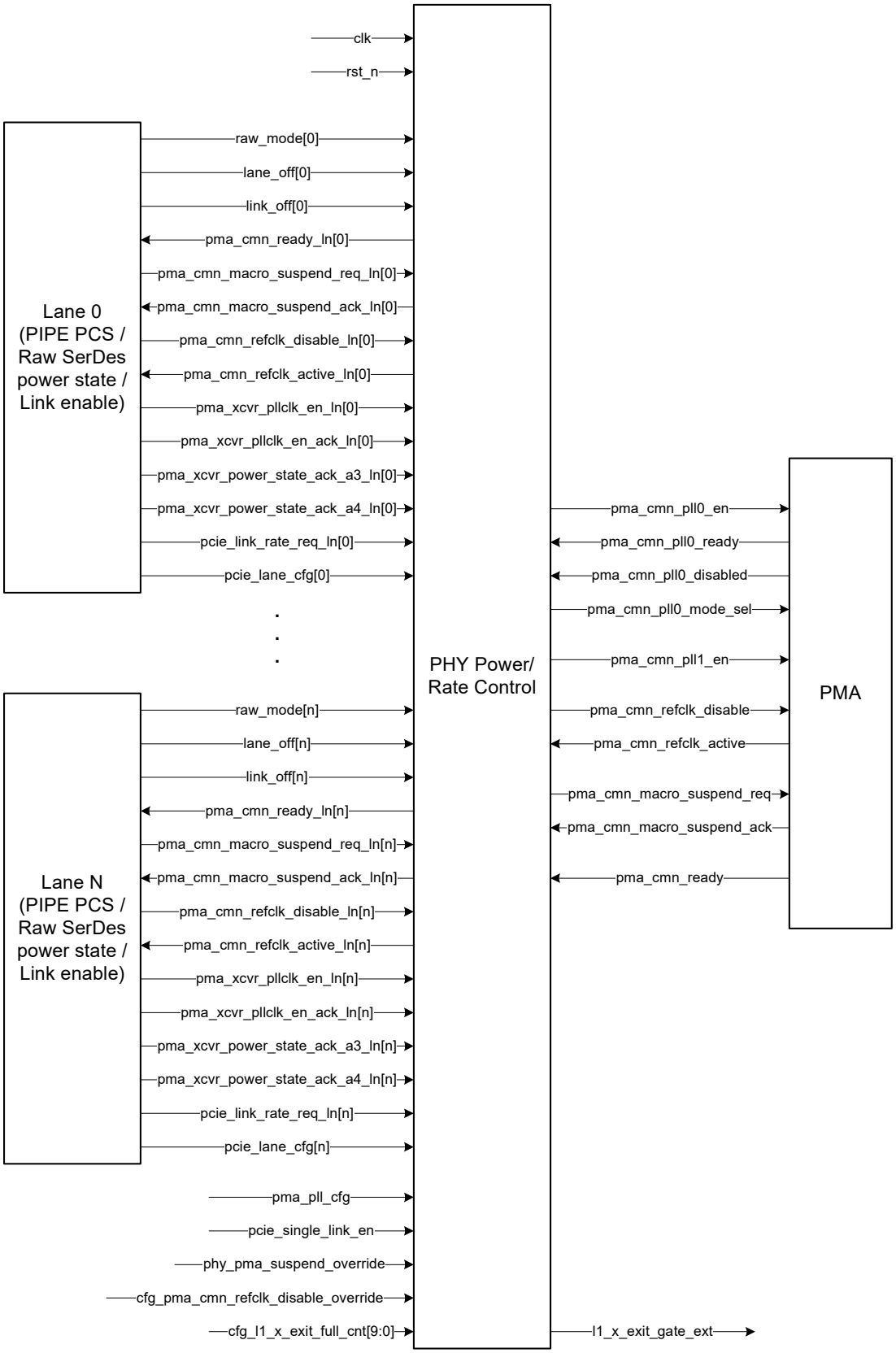

Figure 53: PHY Power/Rate Control block diagram

11.2 PHY power control FSM

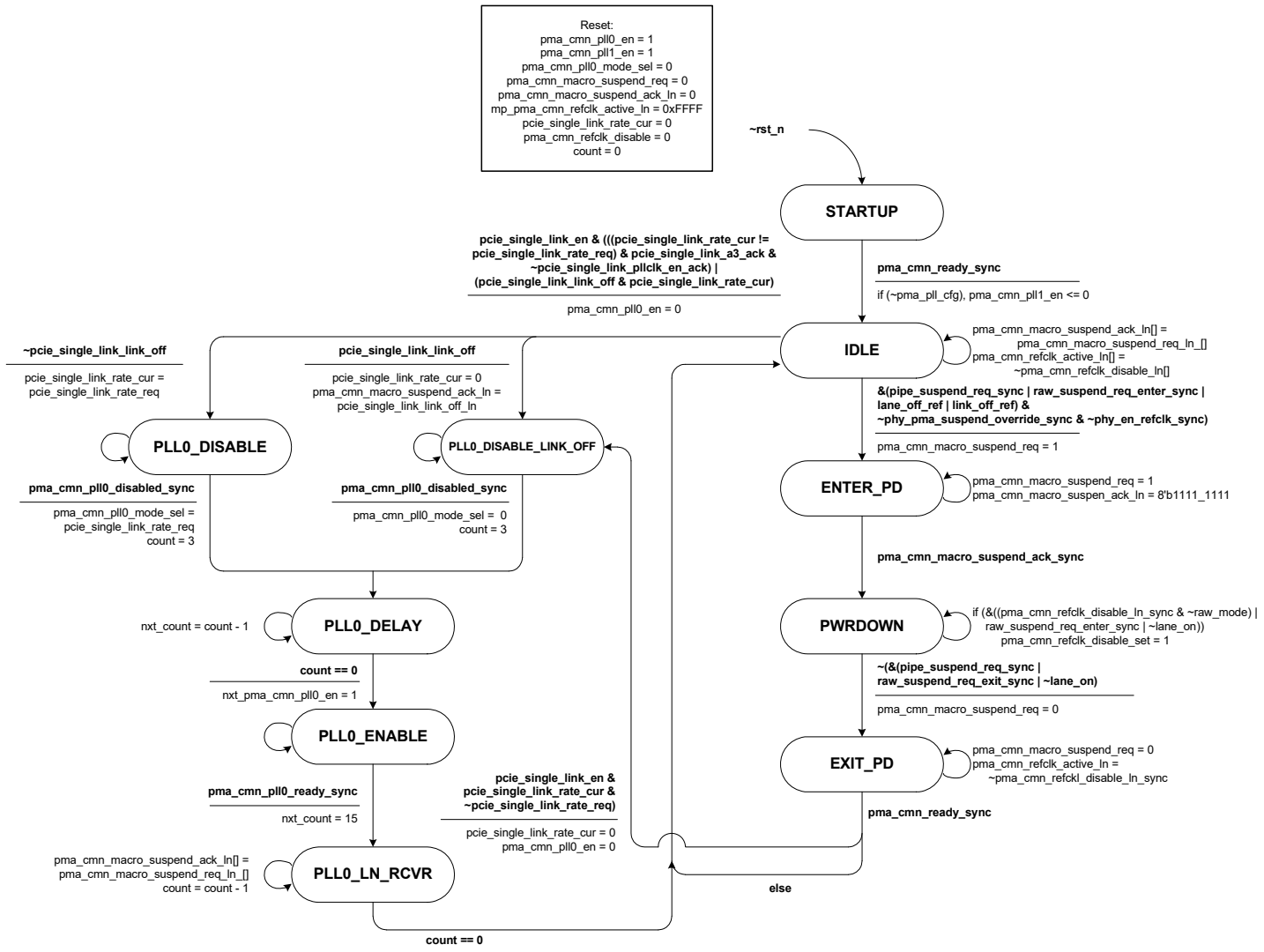

Figure 54: Multi-link PHY Power/Rate Control FSM

11.2.1 Synchronization logic and FSM signals

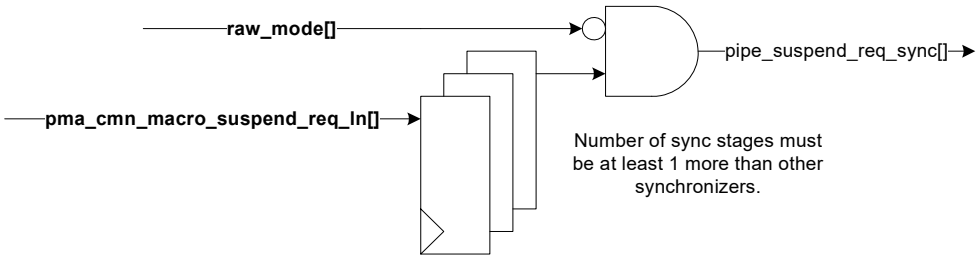

Figure 55: pipe_suspend_req_sync FSM input

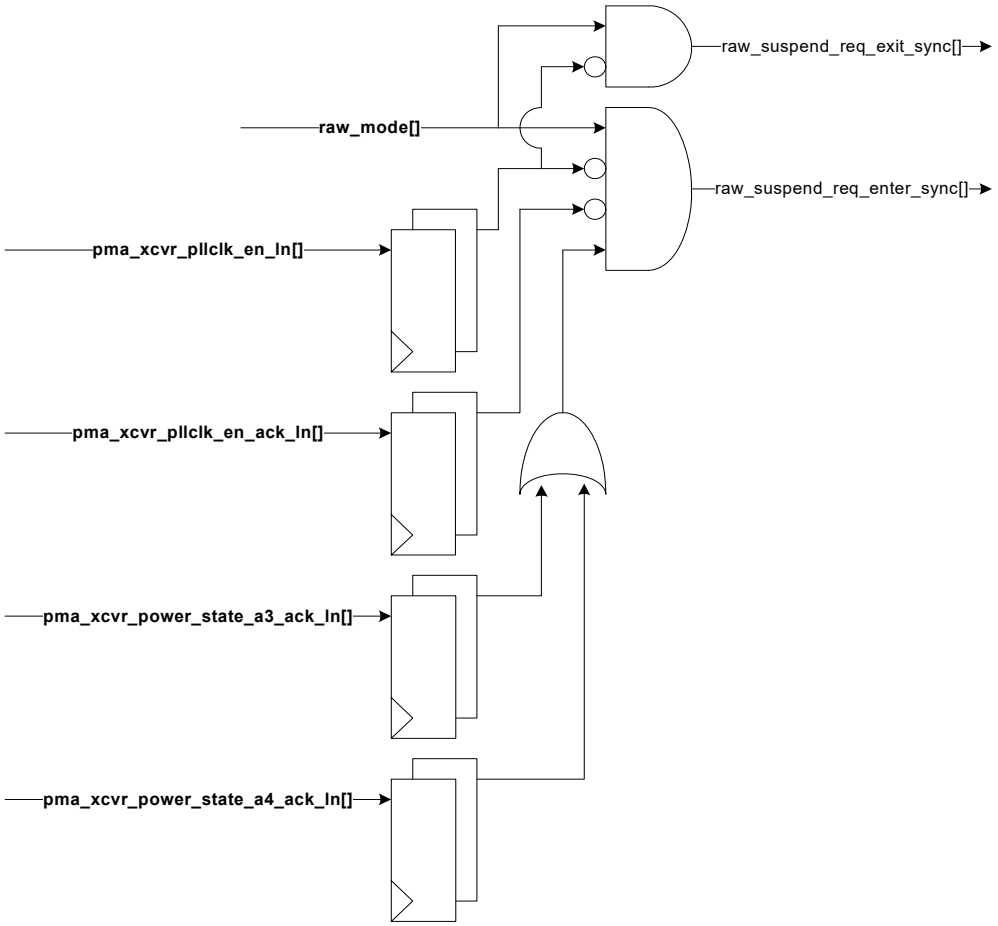

Figure 56: raw_suspend_req_enter_sync and raw_suspend_req_exit_sync FSM inputs

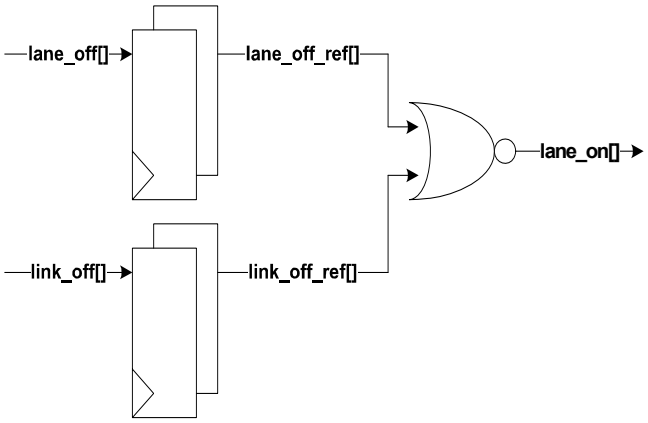

Figure 57: lane_off_ref, link_off_ref and lane_on FSM inputs

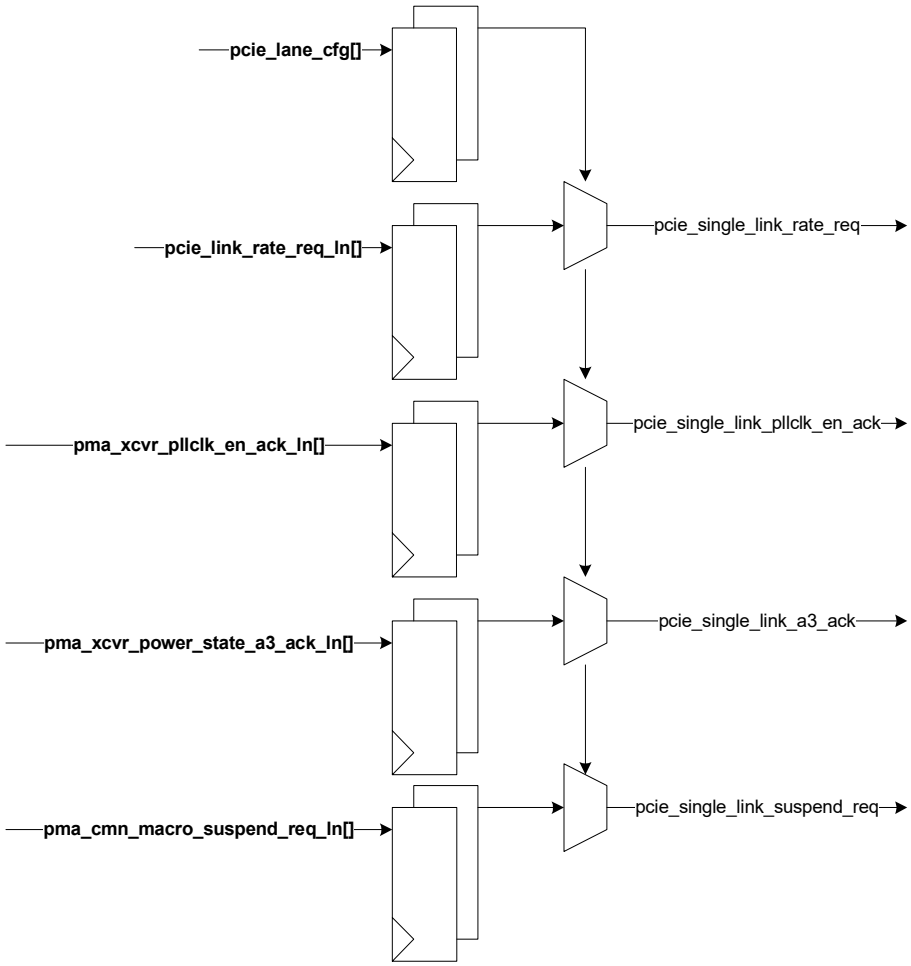

Figure 58: PCIe single link FSM inputs

11.3 Special logic

The pma_cmn_refclk_disable (to the PMA) and pma_cmn_refclk_active_ln[] (to the PCS lanes) module outputs must be cleared when the clock to the module is gated. To eliminate CDC issues to the destination logic, these outputs must be driven by the output of a F/F. The following diagrams describe this logic:

11.3.1 pma_cmn_refclk_disable

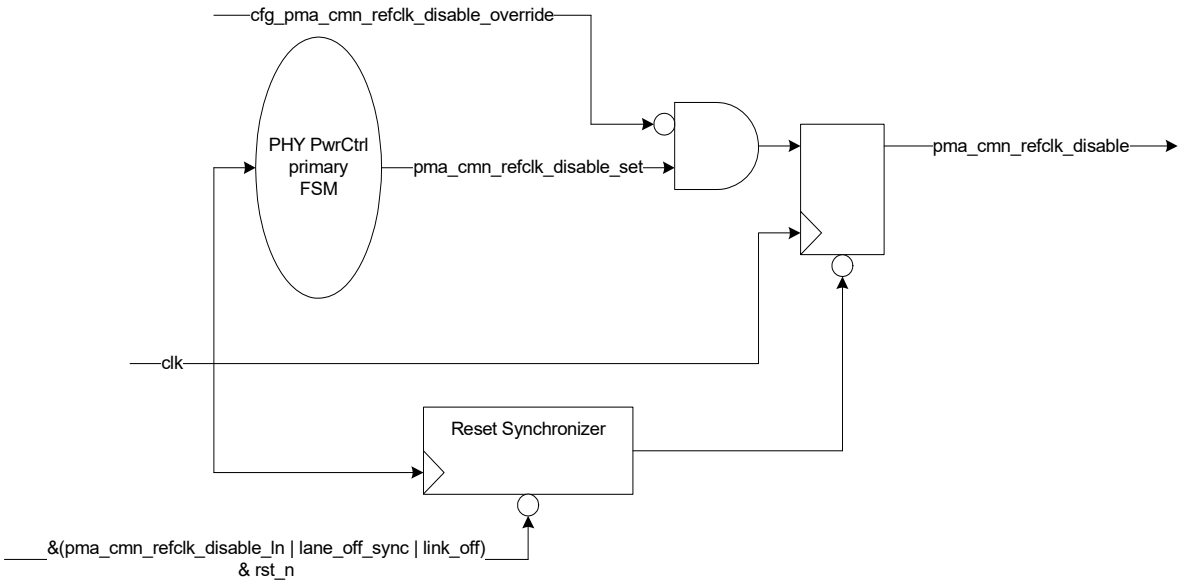

Figure 59: pma_cmn_refclk_disable output logic

pma_cmn_refclk_disable F/F is reset when any associated link (based on the PHY mode of operation) is not in one of the designated low power states (i.e. requests to exit) and can only be set by the PHY power control FSM, when all PHY links are in one of the designated low power states.

11.3.2 pma_cmn_refclk_active_ln[]

pma_cmn_refclk_active_ln[] are outputs to the PIPE PCS lanes (one bit per lane). The associated F/Fs are set by the PHY power control FSM and are cleared by pma_cmn_refclk_active from the PMA.

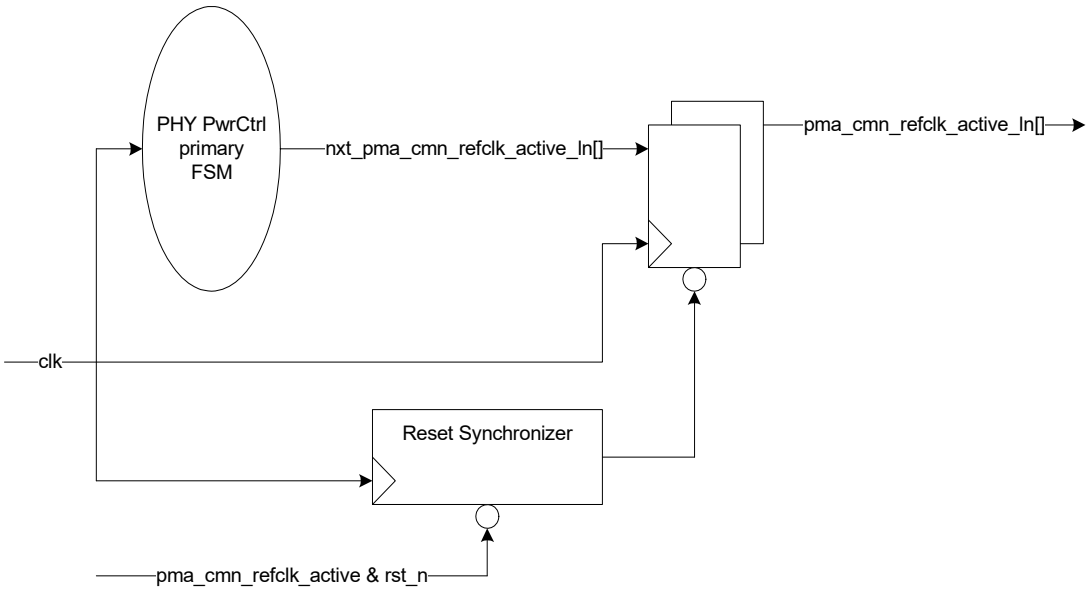

Figure 60: pma_cmn_refclk_active[] output logic

11.3.3 Rx Electrical Idle force

Whenever the PMA is resumed from being suspended, the PMA Rx signal detect output is unstable for a short period of time. The PHY power control logic generates an output (l1_x_exit_gate_ext) that is asserted whenever PMA common is suspended and is de-asserted after a configurable number of reference clock cycles upon exiting suspend. This signal is used to force PIPE RxElecIdle signal high, while the PMA's Rx signal detect output is not reliable.

12 State Change Monitor Description

12.1 State Change Monitor overview

The state change monitor block is a stand-alone module that monitors the PHYs PIPE and Raw SerDes interfaces for power state and data rate (PIPE only) change request failures. If the state change request does not complete within a configurable maximum interval, the state change monitor generate an interrupt strobe and indicates the current power state / data rate and the requested (i.e. failed) next power state / data rate.

The state change monitor logic clocked and reset by the PHY's APB clock and inputs (apb_pclk/apb_preset_n). The APB clock must be free-running (i.e. not gated for any reason) when the state change monitor logic is enabled.

The PHY's APB clock has a maximum clock frequency of 200 MHz. The state change monitor's counter has a width of 20-bits. At the maximum APB clock frequency, this provides a maximum timeout of 5.2 msec, which exceeds the worst case power state or data rate change latency for the PHY. Typically the timeout value will be set for 1 msec based on the APB clock frequency.

To ensure no state change requests can be missed due to synchronization delays within the block, if this logic is used, the minimum APB clock frequency is 20 MHz.

The PHY pin inputs to this module (i.e. mode, pipe_rate, pipe_powerdown, phy_ent_l1_x, phy_ack_l1_x, pma_xcvr_pll-clk_en, pma_xcvr_pllclk_en_ack, pma_xcvr_power_state_req and pma_xcvr_power_state_ack) do not pass through isolation logic . They are connect directly to the associated PHY pins.

The module outputs are captured in the associated lanes interrupt service register.

12.2 Pin List

Dir.	Signal Name	Timing	Description
input	clk	n/a	Module clock - must be free-running when module is enabled.
input	reset_n	clk	Low active module reset - asynchronous assertion, synchronous de-assertion.
input	scanmode	static	Scan mode - 1 = scan mode, 0 = functional mode.
input	enable	async	Monitor enable - 1 = state change monitor logic enabled; 0 = logic dis-abed.
input	cfg_counter[15:0]	static	Counter timeout value - Number of clock cycles (left shifted by 4) in the timeout period (i.e. provides the upper 16 bits - the lower 4 bits are always loaded with 0).
input	phy_mode	static	PHY mode - 0 = PIPE; 1 = Raw SerDes
input	pipe_rate[1:0]	async	Requested PIPE rate
input	pipe_powerdown[2:0]	async	Requested PIPE power state
input	pipe_phy_status	pipe_clk/ async	PIPE PhyStatus - Used to indicate completion of a PIPE power state or data rate change.
input	phy_ent_l1_x	async	L1.x enter/exit request (PIPE sideband signaling) - Asserted high to request power state change to L1.x. De-asserted to request L1.x exit power state change.
input	phy_ack_l1_x	async	L1.x enter/ext acknowledgment (PIPE sideband signaling) - Asserted high upon L1.x entry request to acknowledge entry completion. De-asserted low upon L1.x exit request to acknowledge exit completion.

Table 87: State change monitor pin description

Dir.	Signal Name	Timing	Description
input	pma_xcvr_pllclk_en	async	Raw SerDes transceiver PLL clock enable - Used as part of Raw SerDes power state change protocol for entry/exit into A3 and A4 power states
input	pma_xcvr_pllck_en_ack	async	Raw SerDes transceiver PLL clock enable acknowledgment - Asserted high in response to pma_xcvr_pllclk_en asserted high to acknowledge the transceiver's PLL clocks are running. De-asserted low in response to pma_xcvr_pllclk_en de-asserted low to acknowledge the transciever's PLL clocks are gated.
input	pma_xcvr_power_state_req[5:0]	async	Raw SerDes transceiver power state request - One hot encoded to request 1 of 6 power states (A0, A1, A2, A3, A4 and A5). Note: Must be return to zero
input	pma_xcvr_power_state_ack[5:0]	async	Raw SerDes transceiver power state acknowledge - Used to indicate completion of a power state request by mirroring the requested power state.
output	pwrst_chg_timeout_stb	clk	Asserted for a single clock cycle upon timeout of a power state change request.
output	rate_chg_timeout_stb	clk	Asserted for a single clock cycle upon timeout of a data rate change request.
output	cur_pwrst_rate[2:0]	clk	Indicates the starting power state / data rate. • Loaded with {1'b0, starting pipe_rate[1:0]} for a PIPE data rate change. • Loaded with starting pipe_powerdown[2:0] for a PIPE power state change. • Loaded with 3'b010 for L1.x entry request. • Loaded with 3'b100 for a L1.x exit request. For Raw SerDes requests, loaded based on following: • 3'b000 = power state change with A0 as starting power state • 3'b001 = power state change with A1 as starting power state • 3'b010 = power state change with A1 as starting power state • 3'b011 = power state change with A1 as starting power state • 3'b100 = power state change with A4 as starting power state • 3'b101 = power state change with A5 as starting power state • 3'b110 = PLL clock enable asserted • 3'b111 = PLL clock enable de-asserted
output	req_pwrst_rate[2:0]	clk	Indicates the requested power state / data rate. • Loaded with {1'b0, requested pipe_rate[1:0]} for a PIPE data rate change. • Loaded with requested pipe_powerdown[2:0] for a PIPE power state change. • Loaded with 3'b100 for a L1.x entry request. • Loaded with 3'b010 for a L1.x exit request. For Raw SerDes requests, loaded based on following: • 3'b000 = power state change with A0 as requested power state • 3'b001 = power state change with A1 as requested power state • 3'b010 = power state change with A1 as requested power state • 3'b011 = power state change with A1 as requested power state • 3'b100 = power state change with A4 as requested power state • 3'b101 = power state change with A5 as requested power state • 3'b110 = PLL clock enable asserted • 3'b111 = PLL clock enable de-asserted

Table 87: State change monitor pin description

12.3 FSM

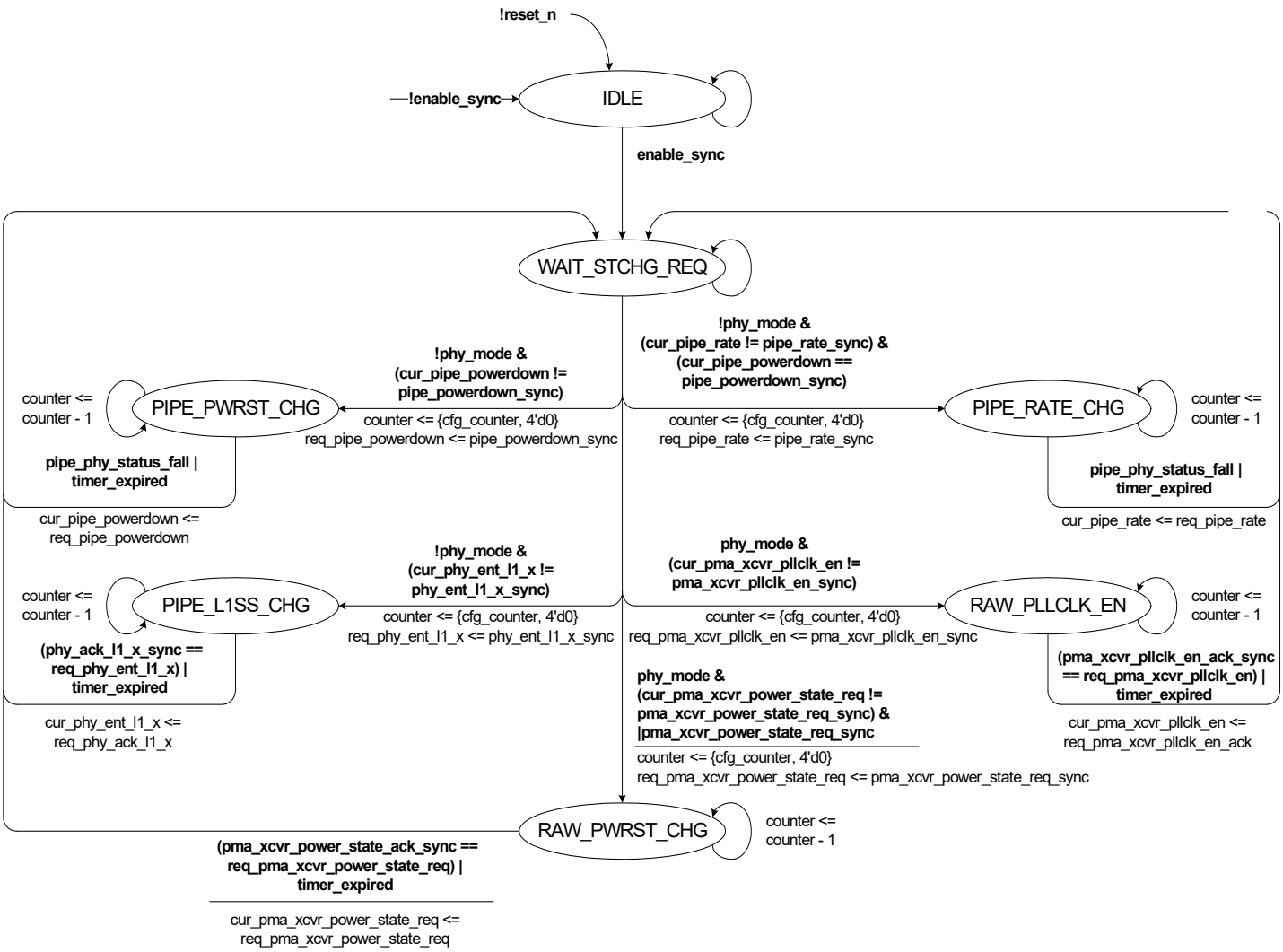

Figure 61: State Change Monitor FSM diagram

Notes:

- timer_expired: This internal signal is asserted high when the counter has reached a value of 0 and the FSM is in any state except IDLE and WAIT_STCHG_REQ.
- rate_chg_timeout_stb is asseted high when timer_expired fires and the FSM is in the PIPE_RATE_CHG state.
- pwrst_chg_timeout_stb is asserted high when timer_expired fires and the FSM is in the PIPE_PWRST_CHG, PIPE_L1SS_CHG, RAW_PWRST_CHG or RAW_PLLCLK_EN states.
- cur_pwrst_rate and nxt_pwrst_rate are captured based on the FSM state upon assertion of timer_expired.

13 PHY Electrical Specifications

13.1 Operating Conditions

Refer to PMA Spec for operating conditions.

13.2 Common Electrical Specifications

Refer to the PMA specification for refclk electrical requirements.

Refer to the PCIe specification for the transmitter and receiver electrical specifications.

13.3 Power Specifications

Refer to the PMA specification for PHY power requirements. The PHY power is dominated by the PMA power requirements. The additional power required by the PCS layer is negligible.

14 Package Specifications

14.1 Package Selection and Design Notes

Great care must be exercised in selecting a package capable of 8.0 Gbs operation. Packages exhibit complex response with multiple poles and zeros that can not be adequately modeled with a simple R, L, and C lumped specification.

14.2 Differential Data Lines

The most critical signals are the lane differential signal pairs: The two signals in each pair (_p and _m) must be matched closely in length, capacitance and inductance. Impedance matched transmission lines in the package substrate are required for these signals. They should be kept as short as possible with a minimum of parasitic capacitance and inductance. Isolation between different sets of pairs should be maintained to prevent cross talk. Signal pairs should be matched between lanes to avoid introducing excessive timing skew.

14.3 Special Analog Signals

The reference clock inputs (cmn_refclk_<p/m> or pma_cmn_refclk_int) are critical and should be treated the same as a differential data line. The noise and cross talk on these lines will impact the macro's performance.

The external bias reference resistor input is cmn_rext. The package capacitance budget for this pin is <5 pF. The trace for this pin should be made as short as possible and isolated from the high speed data signals as best as possible. Parasitic resistance should be held to less than 25 ohms, where parasitic means package trace + any metal connection from bump to the device.

14.4 Supplies

Analog macro supplies are separated on the die to improve isolation.

All analog macro supplies of same voltage should be tied together to a low impedance power plane within the package.

Digital and analog supplies of the same voltage should be tied together on a low impedance power plane on the board immediately outside the package.

15 PHY RTL Compile Options

15.1 PHY Types

The Torrent16/12 FFC PHY RTL code base can be configured to support multiple different PHY types based on which verilog defines are set (see Table 88). These PHY types include:

- Multi-protocol - PIPE interface + full Raw SerDes interface, supporting all PIPE standards (PCIe, USB3 and SATA) and all Raw SerDes interface standards (Ethernet, DP/eDP, SATA, etc.), with the following variations:
  - Reduced Raw SerDes interface, tailored to include only the interface pins required for Ethernet and SATA.
- Raw SerDes only, which eliminates the PIPE interface and its underlying PCS logic.
  - Supports the Reduced Raw SerDes interface option.
- PIPE only, which eliminates the Raw SerDes interface. PIPE only can be ‘tuned’ to support any combination of the PIPE standards.
- For all PHY configurations which support PIPE, the following options are provided:
  - The PIPE PCS can be ‘tuned’ for which protocols to support (i.e. PCIe only, SATA only, USB3 only, PCIe + USB3, PCIe + SATA, USB3 + SATA, or all 3).
  - Two clock configuration options are available: standard PIPE and source synchronous PIPE. For standard PIPE, all synchronous PIPE pins are aligned to pipe_l*_clk. For source synchronous PIPE, the synchronous PIPE output pins remain aligned to pipe_l*_clk, but the synchronous PIPE input pins are aligned to pipe_l*_clk_in.
- The PHY supports an option to include a per-lane state change monitor interrupt output pins(phy_interrupt_ln_<>). These interrupts are asserted high when a power state or PIPE data rate change request does not complete within the configured maximum timeout.

PHY Type	RTL Defines						
	CDN_MPPHY_ PIPE_REMOVE	CDN_MPPHY_ RAW_REMOVE	CDN_MPHY_ ETHERNET_ONLY	MP_PCIE	MP_USB	MP_SATA	MP_128B_PATH
Full Multi-protocol				X	X	X	X
Multi-protocol with reduced Raw			X	X	X	X	X
PIPE PCIe only		X		X			X
PIPE USB only		X			X		
PIPE SATA only		X			X		
PIPEonly		X		X	X	X	X
Raw SerDes-only	X						
Reduced Raw SerDes-only	X		X				

Table 88: PHY Configuration Define Settings for Various PHY Types

15.2 RTL Defines

15.2.1 Pre-delivery

The following defines set the IP configuration and are stripped from the customer deliverable RTL:

CDN_MPPHY_PIPE_REMOVE: When defined, the PIPE interface and underlying PIPE PCS logic is removed.

CDN_MPPHY_RAW_REMOVE: When defined, the Raw SerDes interface and underlying logic is removed.

CDN_MPPHY_ETHERNET_ONLY: When defined, the Raw SerDes interface pins are reduced to a sub-set required for Ethernet and SATA (i.e. the Rx equalization evaluation, Tx get coefficient, Tx de-emphasis, receiver detect, Tx margin, Tx swing and Rx termination interface pins are removed). If CDN_MPPHY_RAW_REMOVE is defined, this define has no effect.

MP_PCIE: When defined and CDN_MPPHY_PIPE_REMOVE is not defined, enables support for PCIe Gen1/2. When MP_128B_PATH is also defined, PCIE Gen3/4 is supported, as well.

MP_USB: When defined and CDN_MPPHY_PIPE_REMOVE is not defined, enables support for USB Gen1. When MP_128B_PATH is also defined, USB Gen2 is supported, as well.

MP_SATA: When defined and CDN_MPPHY_PIPE_REMOVE is not defined, enables support for SATA Gen1/2/3.

MP_128B_PATH: When defined, support for the 128b/13xb encoded PIPE data rates (PCIe Gen3/4 and USB Gen2) is enabled. Only applicable if CDN_MPPHY_PIPE_REMOVE is not defined and MP_PCIE and/or MP_USB are defined.

MP_SRC_SYNC_PCLK: When defined, source synchronous PIPE is enabled. The default configuration is standard PIPE (i.e. without the define set). Only applicable if CDN_MPPHY_PIPE_REMOVE is not defined.

MP_PHY_AUTO_SAFE_EN: When defined, the state change monitor interrupt outputs are included in the PHY pinout.

15.2.2 Post-delivery

The following defines are included in the customer deliverable RTL and are provided to allow customization of the IP by the customer:

CDN_MPPHY_LN{1:n}_SLAVE_ONLY: When defined for a lane, the lane will only operate as a slave lane. phy_link_cfg_ln_n shall not be driven high and must be tied low.

CDN_MPPHY_LN{1:n}_MASTER_ONLY: When defined for a lane, the lane will only operate as a slave lane. phy_link_cfg_ln_n shall not be driven low and must be tied high.

For any lane, only 1 (or neither) of these defines can be set.

CDN_MPPHY_PCIE_AUTO_CFG: When defined, PHY logic is included that automatically configures the PHY for PCIe single or multi-link operation per the PHY Programmer’s Guide at startup with 100 MHz reference clock, no SSC (i.e. no APB registers writes required from SoC).

Change Log

Version	Description of changes
0.1	Released: October 18, 2016 • Initial release based on Torrent7 PCIe PHY and Sierra16FFC MP PHY specs.
0.2	Released: January 5, 2017 • Added phy_en_refclk, phy_refclk_reqd and phy_pma_suspend_override pins and associated isolation and control registers and timing diagrams.
0.3	Released: January 18, 2017 • Deleted pma_cmn_refclk_ana_div and pma_cmn_refclk_sel PHY inputs. • Added pma_cmn_refclk_int_mode, pma_cmn_refclk_mode, pma_cmn_refclk_dig_sel, pma_cmn_refclk_term_en PHY input pins. • Updated to add description for source synchronous PIPE PHY configuration. • Updated the PHY registers to align with latest PMA pins. • Added missing PHY_PIPE_LANE_DSBL register. • Updated PMA isolation register descriptions for PHY isolation mode when lane configured for Raw SerDes mode. • Added tags in register descriptions for which registers/fields are present or not based on the PHY configuration.
0.5	Released: January 20, 2017 • Removed deprecated PMA isolation register bit for cmn_macro_en. • Added phy_interrupt_ln_<> PHY output pins. • Added state change monitor timeout register and interrupt status register. • Added operation description for state change monitor.
0.6	Released: February 6, 2017 • Added missing pma_rx_signal_detect_ln_* Raw SerDes I/F output in pin list. • Fixed typo in pin list for pipe_tx_pattern. Missing [1:0]. • Fixed typos for register defaults.
0.7	Released: February 23, 2017 • Split xcvr_avdd_ln_* power pins into separate rx_avdd_ln_* and tx_avdd_ln_* pins. • Removed tx_bscan_ext_highz PHY inputs and tx_bscan_highz PHY field in PHY_PMA_ISO_LINK_MODE register. • Added support for PIPE 4.4 L1 substate control: added pipe_l*_pcie_l1_ss_en strap pins, extended pipe_l*_powerdown from 2 to 3 bits wide, updated the pin descriptions for pipe_l*_powerdown, phy_l*_ent_l1_x, phy_l*_ack_l1_x, phy_l*_rx_elec_idle_det_en and phy_l*_tx_cmn_mode_en, added isolation register bits for phy_l*_pcie_l1_ss_en and added description of PIPE L1 SS operation in PHY operation chapter.
0.8	Released: February 27, 2017 • Updated digital testbus mapping. • Updated description for Raw SerDes data rate change procedure.
0.9	Released: March 20, 2017 • Fixed typos with PHY for PHY_INTERRUPT_STS registers description. • Fixed typo for pma_tx_td_clk_ln_* pin (from pma_tx_tx_clk_ln_*).
1.0	Released: March 22, 2017 • Changed access type for PHY_INTERRUPT_STS bits 1 and 0 from R/W to RC. • Added isolation register field for pma_fullrt_div_ln_* PHY inputs in PHY_ISO_LINK_CFG register. • Changed all references to cmn_refclk0_<> to cmn_refclk_<>
1.1	Released: March 27, 2017 • Updated clocking diagrams to show scan MUXs in PMA and PHY soft. Split out RefClk and PSM clock from the data rate clocks. Also, split out the fullrate and MacClk from data rate clock diagram.

Version	Description of changes
1.2	Released: April 6, 2017 • Fixed typo in description for PHY_PIPE_CMN_CTRL1[1]. The polarity of the function reversed so that 1 enables the override and 0 is normal operation. • Removed description for Get Init Coefficient from PHY operations chapter. Get Init Coeff not supported on Torrent PMAs. • Updated data rate clock and SFIFO diagrams with description of configuration options to remove the master/slave MUXs for lanes that can only operate as masters or slaves. • Added description of configuration option to remove master/slave MUXs in configuration options chapter.
1.3	Released: April 13, 2017 • Updated Raw SerDes Rate Change and Mode change diagrams to show must initially go to the A2 power state after link recovery. Can't go straight to A0. • Changed access type for PHY_INTERRUPT_STS bits [0] and [1] to be WRC.
1.4	Released: April 28, 2017 • Updated the description for pipe_l*_tx_swing and pipe_l*_tx_margin to specify that these inputs should be held static after link startup. • Updated the description in the PHY operation chapter to remove reference to dynamic change of Tx swing or Tx margin during operation.
1.5	Released: May 25, 2017 • Added clarification for the behavior of pma_xcvr_power_state_ack_ln_<> during a power state change using the Raw SerDes for a multi-lane link. • Fixed typo in section 11.11.2. Signal name change from pma_tx_get_local_preset_index_ln_<> to pma_tx_get_local_preset_coef_ln_<>. • Removed Raw SerDes A3 link power state as a qualifying link power state to allow common to be suspended. • Added restriction that nominally empty elasticity buffer mode is only supported for USB Gen1 and SATA. • Updated the PHY power control FSM for enhancement to support link reset corner case.
1.6	Released: June 15, 2017 • Updated PHY_PMA_ISO_RX_EQ_CTRL register description to make bit [11] to be R/O Reserved. • Updated configuration description for USB+Ethernet to indicate PLL0 used for USB links and PLL1 is used for Ethernet links. • Added single link PCIe (SSC) + multiple Ethernet links configuration option to Table 9. • Added description to PHY counter registers to indicate which clock the counter runs on for PHY_PIPE_RCV_DET_INH and PHY_PIPE_RX_ELEC_IDLE_DLY. • Fixed typos in PHY_INTERRUPT_STS registers bits [10:8] and [6:4]. • Filled out Table 81 with power state transition timing.
1.7	Released: July 11, 2017 • Fixed typo in bit width of reset value for PHY_STATE_CHG_TIMEOUT • Fixed figures that were mistakenly listed as tables. • Filled in the operating conditions table.
1.8	Released: August 10, 2017 • Removed references to phy_l*_eth_mode_en. • Added clarification that PHY inputs (PIPE and Raw SerDes) must be driven with their initial/start-up values upon link reset. • Added requirement that pma_xcvr_power_state_req_ln_* must be driven with 0x00 for at least 100 nsec between power state change requests. • Updated the t_{enable} PIPE and Raw timing values due to a change to the programmer's guide which increased the max $t_{rst_to_ready}$ time. • Fixed typos on Overview block diagram. • Added missing PHY pins: pma_refclk and pma_refclk_gated diagnostic outputs. • Added description for pma_cmn_refclk_mode and pma_cmn_refclk_int_mode pins. • Added description for pma_cmn_refclk_int_mode and pma_cmn_refclk_mode.
1.9	Released: September 22, 2017 • Switched the PLL used by JESD and Ethernet in Table 9 to align with programmer's guide • Fixed paragraph and table formats including table cell ruling for consistency.

Version	Description of changes
2.0	Released: October 3, 2017 • Updated Raw SerDes startup sequence timing diagram such that pma_xcvr_pllclk_en_ln_* is asserted high upon de-assertion of either phy_reset_n (when the enabled at PHY startup) or phy_l*_reset_n when link enable after PHY startup. • Updated pipe_l<>_tx_get_local_preset_coef pin description to restrict to only when PHY is in P0 power state. • Updated the PHY_PIPE_RCV_DET_INH register description for counter running on RefClk instead of PIPE clock.
2.1	Released: November 10, 2017 • Updated the Raw SerDes rate and mode change diagrams and description to restrict the first power state after the rate/mode change to be A2 (instead of A0 or A2).
2.2	Released: November 20, 2017 • Updated process variable from 16FFC to 16FFC_12FFC as this spec will cover both 16FFC and 12FFC as well
2.3	Released: February 7, 2018 • Fixed typo with description of pin name for PHY_ISO_LINK_CFG bit[5].
2.4	Released: March 27, 2018 • Added support for USB3.2 Tx de-emphasis. Updated description for pipe_l*_tx_deemph input. Added new USB3 Gen 2 de-emphasis configuration registers. Added description in PHY Operation chapter.
2.5	Released: May 11, 2018 • Marked PHY_PIPE_LANE_DSBL and PHY_PIPE_USB3_GEN2_<PRE/POST>_CFG* registers as present only for PHY configurations with a PIPE I/F.
2.6	Released: September 27, 2018 • Updated default values for USB3 Gen2 deemphasis multiplier registers. Pre and post values reversed. Pre changed to 5/64. Post to 1/8.
2.7	Released: December 3, 2018 • Added XFI as a supported standard.
2.8	Released: April 1, 2019 • Added missing N-FTS value for PCIe Gen 3 operation.
2.9	Released: April 29, 2019 • Updated reset value for PHY_PMA_ISO_TX_FSLF register.
3.0	Released: August 6, 2019 • Fixed typo in description for bit 8 of PHY_ISO_CMN_CTRL register wrt to pin name.
3.1	Released: August 29, 2019 • Corrected Rx latency values. Clarified that these values are for the PCS latency and the total PHY latency is PCS + PMA latency.
3.2	Release Date: September 25, 2019 • Updated tx_bscan_ext_shiftdr signal timing from async to tx_bscan_ext_clockdr in manufacturing test and diagnostics related pin list table (SER-20385) • Updated rx_bscan_ext_shiftdr signal timing from async to rx_bscan_ext_clockdr in manufacturing test and diagnostics related pin list table (SER-20385)
3.3	Release Date: March 19, 2020 • Updated timing state change latency formula for P2/P3 to P0 and L1.x to P1 to include time to disable the reference clock. • Added USXGMII as a supported standard
3.4	Release Date: May 05, 2020 • Updated pipe_l{nn:00}_rx_elec_idle pin description in pin list table (SER-22795) • Updated pma_cmn_scanin[31:0] to pma_cmn_scanin[39:0] in PHY manufacturing test and diagnostics related pin list table (SER-22999) • Updated pma_cmn_scanout[31:0] to pma_cmn_scanout[39:0] in PHY manufacturing test and diagnostics related pin list table (SER-22999)

Version	Description of changes
3.5	Release Date: July 30, 2020 • Updated PCIe + Ethernet with PCIe (no SSC) + Ethernet description in supported PHY configurations table (SER-23398) • Added PCIe (SSC) + Ethernet description row in supported PHY configurations table (SER-23398) • Updated pma_rx_link_eval_fb_dir_change_ln_{n:0}[5:0] (#) pin description in Multi-protocol PHY On-chip functional pin list tale (SER-23527) • Added vdd pin for 16FFC in power pin list table (SER-24129) • Created 16FFC and 12FFC templates to manage technology specific content (SER-24129)
3.6	Release Date: August 19, 2020 • Added PCIe auto-configuration for single or multi link operation.
3.7	Release Date: December 04, 2020 • Removed table note in pipe_l{nn:00}_tx_margin[2:0] and pipe_l{nn:00}_tx_swing pin description (SER-25389)
3.8	Release Date: March 10, 2021 • Updated PHY_PMA_ISO_CMN_CTRL register bits 9:8 default value from 3'd0 to 2'd0 (SER-26287) • Removed 10G-KR references in overview, operation, and RTL compile options sections (SER-26318)
3.9	Release Date: May 20, 2021 • Renamed and updated PIPE PCS Transmit and Receive Latency section including PHY-level (PCS) Transmit and Receiver Latency table caption (SER-27332)
4.0	Release Date: March 29, 2022 • Removed DP/eDP Tx + Ethernet, SATA + Ethernet, Ethernet + JESD204B, JESD204B + XFI/USXGMII rows in supported PHY configuration table (SER-28060) • Removed Single link DP/eDP Tx + multi-link Ethernet, Multi-link SATA + multi-link Ethernet, Multi-link Ethernet + single link JESD204B, Multi-link Ethernet + multi-link XFI/USXGMII rows in PLL Mapping based on PHY Configuration table (SER-28060)
4.1	Release Date: May 19, 2022 • Updated pma_cmn_refclk_mode[1:0] signal description in on-chip functional pin list table (SER-30847)
4.2	Release Date: February 02, 2023 • Updated pipe_l{nn:00}_tx_det_rx_lpbk * signal description in Multi-protocol PHY On-chip functional pin list table (SER-34319) • Updated PHY_PCS_ISO_LINK_CTRL register bit 2 description (SER-34319)
4.3	Release Date: April 26, 2023 • Replaced USB3.1 with USB3.2 (SER-35904)
4.4	Release Date: May 30, 2023 • Replaced PIPE_PCIeG3 name with PIPE_BlkEncRate in PHY-level (PCS) Transmit and Receiver Latency table (SER-36554) • Replaced PIPE_PCIeG1/2 name with PIPE_8b10EncRate in PHY-level (PCS) Transmit and Receiver Latency table (SER-36554) • Replaced PCIe Gen 3 data rate with PCIe Gen 3 and USB3 Gen 2 data rates in PHY-level (PCS) Transmit and Receiver Latency table (SER-36554) • Replaced PCIe Gen 1/2 data rates with PCIe Gen 1/2, USB3 Gen 1 and SATA data rates in PHY-level (PCS) Transmit and Receiver Latency table (SER-36554) • Expanded pma_pllclk_fullrt clock frequency row to include PCIe, USB3, SATA, DP Tx, Ethernet, and JESD204B modes in general timing specifications table (SER-36586)